We Rig It Right!

THE PROFESSIONAL RIGGER

Volume 22 Number 2 May 2007

TECHNICAL WORKSHOP

Load Transfer with Trolley Beam

When using temporary trolley beams to hoist and transfer a load, special consideration must be given to the loads imposed at the beam's support points.

In the following example, the tare weight of the trolley beam has been accounted for. The weight of the trolley, chain fall, rigging and net load combined are represented by the value 4,200 lbs. What has not been determined are the loads imposed during the transfer. Answer the questions in this workshop by using the rigging card information available at the bottom of the page. Check your answers in Column 3 on Page 2.

The workshop at the right was taken from Mike's Rigging Mysteries, Black Book.

All 110 workshops are available at: www.mikesriggingmysteries.com.

The Professional Rigger is a publication of Industrial Training International, Inc. It is distributed to those whose occupations require the safe and proper use of lifting and rigging equipment.

For more information contact
The Professional Rigger
PO Box 1660
Woodland WA 98674
(360) 225-1100
or visit our web site: www.wrrc.com

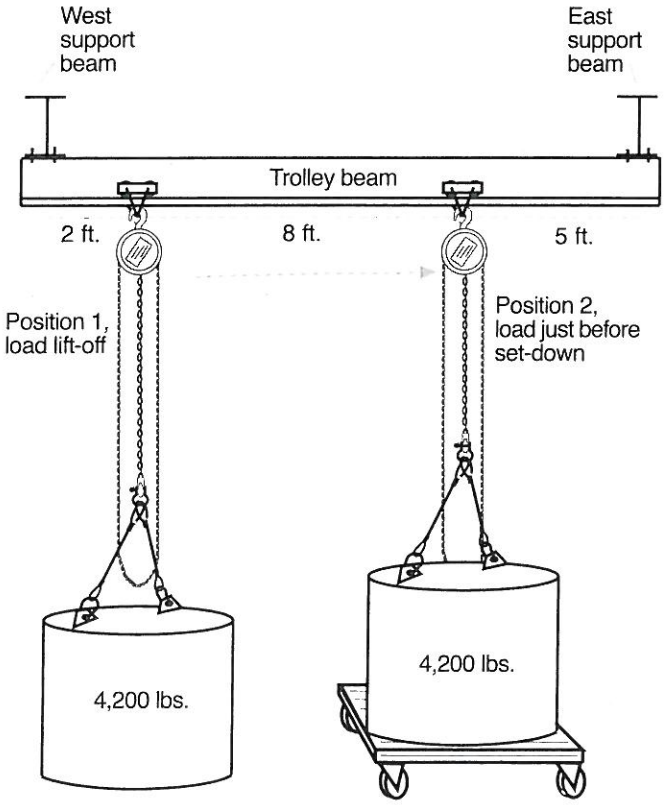

Portion of load to West beam when lifting load at Position 1 =_____#

Portion of load to West beam just before set-down at Position 2 = _____#

Portion of load to East beam when lifting load at Position 1 =_____#

Portion of load to East beam just before set-down at Position 2 = _____#

Hint: Refer to JRRC-P2 to help solve this mystery.

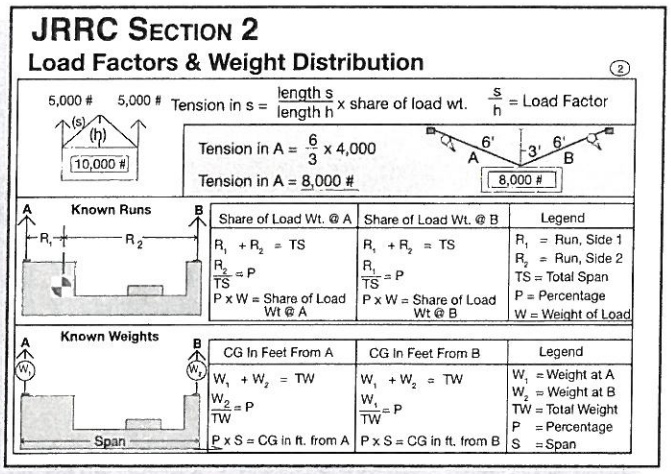

JRRC SECTION 2

Load Factors & Weight Distribution (2)

5,000 # 5,000 # (s) (h) 10,000 #

Tension in s = $\frac{\text{length s}}{\text{length h}}$ x share of load wt. $\frac{s}{h}$ = Load Factor

Tension in A = $\frac{6}{3}$ x 4,000

Tension in A = 8,000 #

A 6' 3' 6' B 8,000 #

Known Runs

Share of Load Wt. @ A	Share of Load Wt. @ B	Legend
$R_1 + R_2 = TS$	$R_1 + R_2 = TS$	R_1 = Run, Side 1
$\frac{R_2}{TS} = P$	$\frac{R_1}{TS} = P$	R_2 = Run, Side 2
P x W = Share of Load Wt @ A	P x W = Share of Load Wt @ B	TS = Total Span
		P = Percentage
		W = Weight of Load

Known Weights

CG In Feet From A	CG In Feet From B	Legend
$W_1 + W_2 = TW$	$W_1 + W_2 = TW$	W_1 = Weight at A
$\frac{W_2}{TW} = P$	$\frac{W_1}{TW} = P$	W_2 = Weight at B
		TW = Total Weight
		P = Percentage
P x S = CG in ft. from A	P x S = CG in ft. from B	S = Span

We Rig It Right!

THE PROFESSIONAL RIGGER

Volume 22 Number 2 May 2007

TECHNICAL WORKSHOP

Load Transfer with Trolley Beam

When using temporary trolley beams to hoist and transfer a load, special consideration must be given to the loads imposed at the beam's support points.

In the following example, the tare weight of the trolley beam has been accounted for. The weight of the trolley, chain fall, rigging and net load combined are represented by the value 4,200 lbs. What has not been determined are the loads imposed during the transfer. Answer the questions in this workshop by using the rigging card information available at the bottom of the page. Check your answers in Column 3 on Page 2.

The workshop at the right was taken from Mike's Rigging Mysteries, Black Book.

All 110 workshops are available at: www.mikesriggingmysteries.com.

The Professional Rigger is a publication of Industrial Training International, Inc. It is distributed to those whose occupations require the safe and proper use of lifting and rigging equipment.

For more information contact
The Professional Rigger
PO Box 1660
Woodland WA 98674
(360) 225-1100
or visit our web site: www.wrrc.com

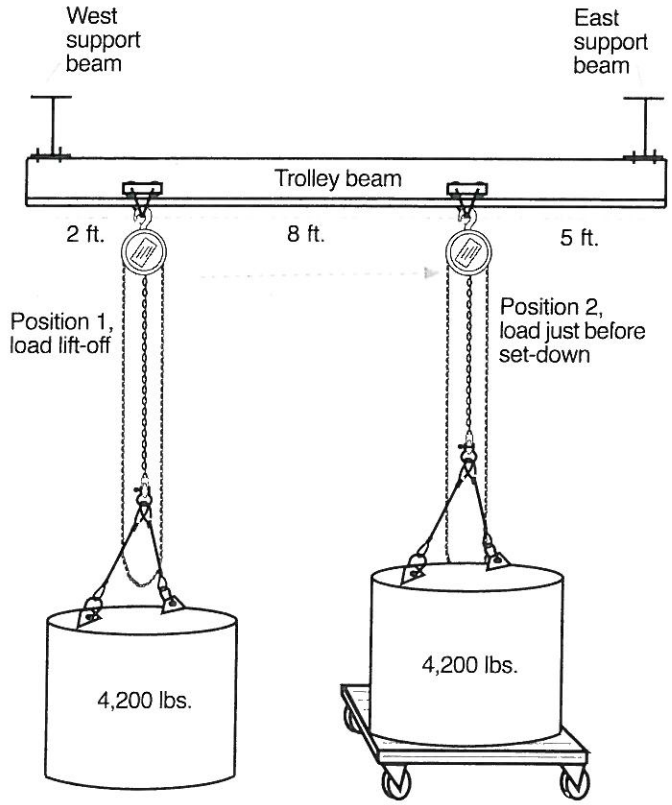

Portion of load to West beam when lifting load at Position 1 =_____#

Portion of load to West beam just before set-down at Position 2 = _____#

Portion of load to East beam when lifting load at Position 1 =_____#

Portion of load to East beam just before set-down at Position 2 = _____#

Hint: Refer to JRRC-P2 to help solve this mystery.

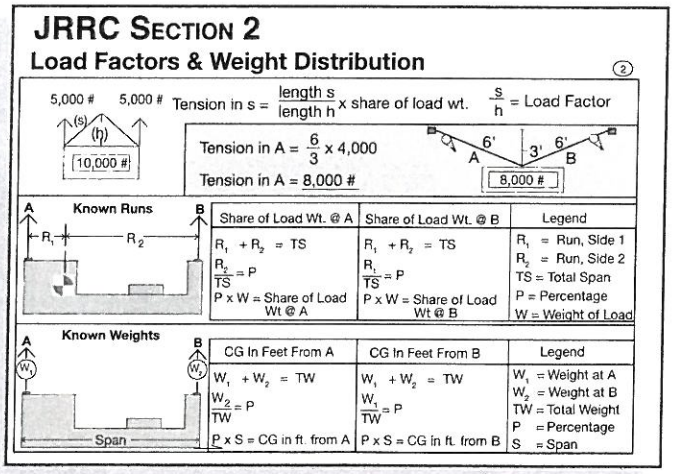

JRRC SECTION 2

Load Factors & Weight Distribution (2)

5,000 # 5,000 # (s) (h) 10,000 #

Tension in s = $\frac{\text{length s}}{\text{length h}}$ x share of load wt. $\frac{s}{h}$ = Load Factor

Tension in A = $\frac{6}{3}$ x 4,000

Tension in A = 8,000 #

A 6' 3' 6' B 8,000 #

Known Runs

Share of Load Wt. @ A	Share of Load Wt. @ B	Legend
$R_1 + R_2 = TS$	$R_1 + R_2 = TS$	R_1 = Run, Side 1
$\frac{R_2}{TS} = P$	$\frac{R_1}{TS} = P$	R_2 = Run, Side 2
P x W = Share of Load Wt @ A	P x W = Share of Load Wt @ B	TS = Total Span
		P = Percentage
		W = Weight of Load

Known Weights

CG In Feet From A	CG In Feet From B	Legend
$W_1 + W_2 = TW$	$W_1 + W_2 = TW$	W_1 = Weight at A
$\frac{W_2}{TW} = P$	$\frac{W_1}{TW} = P$	W_2 = Weight at B
P x S = CG in ft. from A	P x S = CG in ft. from B	TW = Total Weight
		P = Percentage
		S = Span