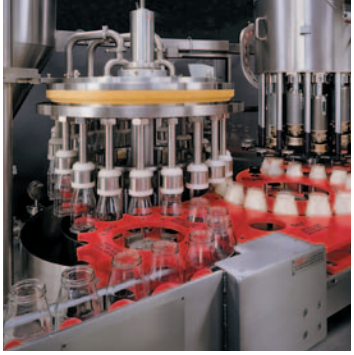

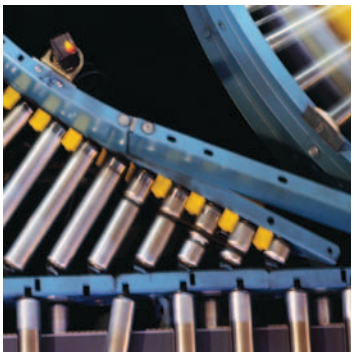

aerospace
climate control
electromechanical
filtration
fluid & gas handling
hydraulics
pneumatics
process control
sealing & shielding

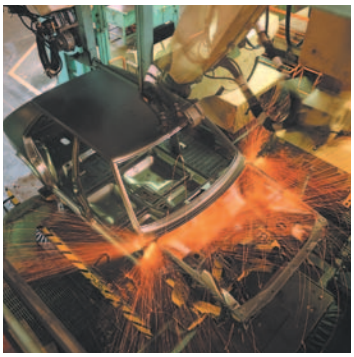

Click here to view bookmarks.

(Revised 3-17-2011)

Air Preparation Products

Filters, Regulators, Lubricators, & Airline Accessories

Catalog 0700P-7

Parker

ENGINEERING YOUR SUCCESS.

Distributor Network, Warning, Offer of Sale

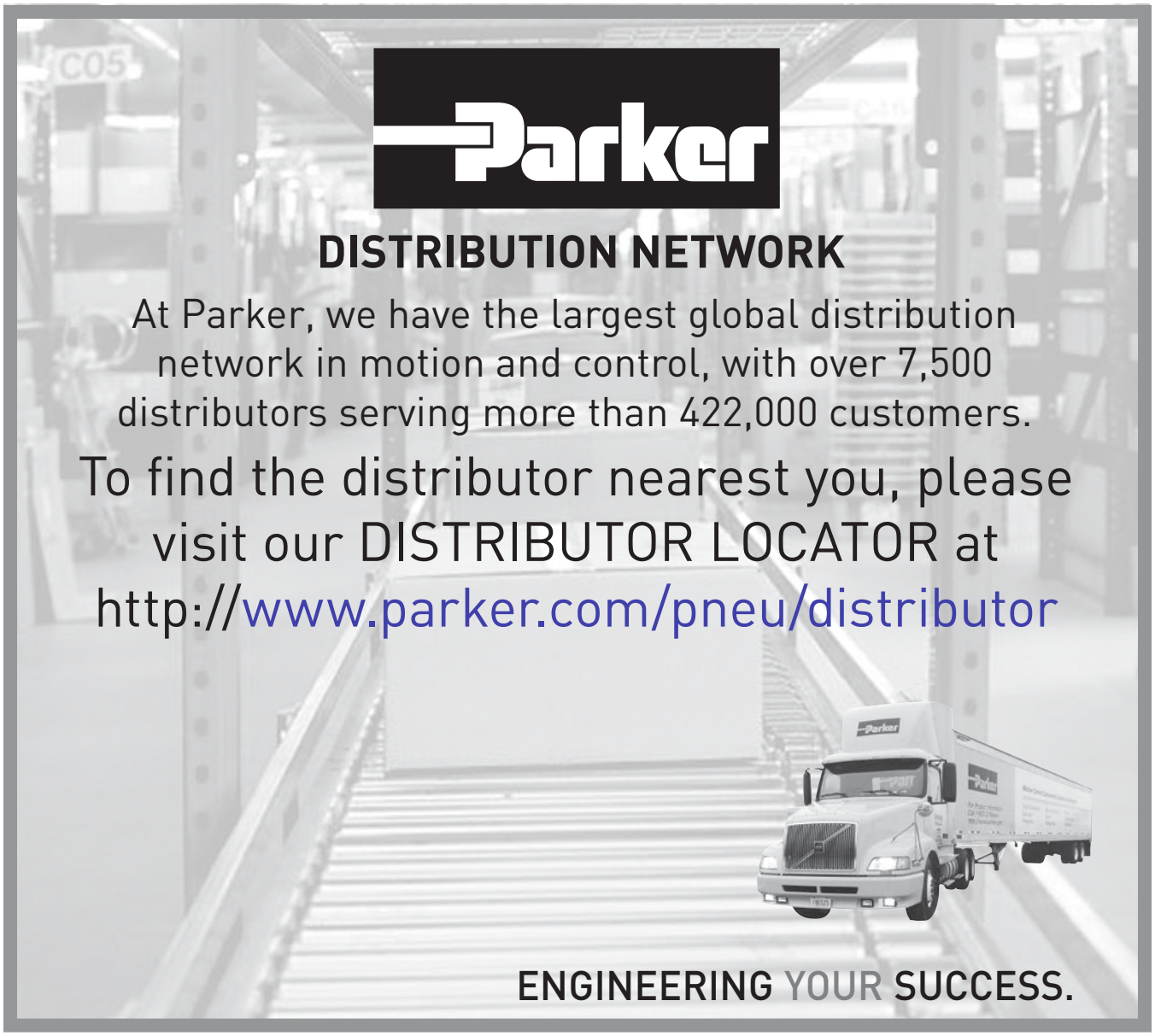

⚠ WARNING

FAILURE OR IMPROPER SELECTION OR IMPROPER USE OF THE PRODUCTS AND/OR SYSTEMS DESCRIBED HEREIN OR RELATED ITEMS CAN CAUSE DEATH, PERSONAL INJURY AND PROPERTY DAMAGE.

This document and other information from Parker Hannifin Corporation, its subsidiaries and authorized distributors provide product and/or system options for further investigation by users h aving technical expertise. It is important that you analyze all aspects of your application including consequences of any failure, and review the information concerning the product or system in the current product catalog. Due to the variety of operating conditions and applications for these products or systems, the user, through its own analysis and testing, is solely responsible for making the final selection of the products and systems and assuring that all performance, safety and warning requirements of the application are met.

The products described herein, including without limitation, product features, specifications, designs, availability and pricing, are subject to change by Parker Hannifin Corporation and its subsidiaries at any time without notice.

Offer of Sale

The items described in this document are hereby offered for sale by Parker Hannifin Corporation, its subsidiaries or its authorized distributors. This offer and its acceptance are governed by the provisions stated on the separate page of this document entitled “Offer of Sale”.

© Copyright 2010-2005 Parker Hannifin Corporation. All Rights Reserved

Parker Hannifin Corporation
Pneumatic Division
Richland, Michigan
www.parker.com/pneumatics

Index

Introduction			A Introduction
Global Air Preparation System	*www.parker.com/globalfrl*		B Global Air Preparation Systems
Filters, Regulators, Lubricators	*www.parker.com/pneu/frl*		C Filters, Regulators, Lubricators
Stainless Steel FRLs	*www.parker.com/pneu/ssfrls*		D Stainless Steel FRLs
Precision Regulators	*www.parker.com/pneu/precreg*		E Precision Regulators
Proportional Regulators (P31P, P32P & PAR™-15)			F Proportional Regulators
LV / EZ Lockout Valves (Lockout Valves)	*www.parker.com/pneu/lockout*		G "LV" / "EZ" Lockout Valves
Integrated Fittings			H Integrated Fittings
Accessories	*www.parker.com/pneu/accessories*		J Accessories
Ball Valves / Plug Valves	*www.parker.com/pneu/ball*		K Ball Valves / Plug Valves
Quick Couplings			L Quick Couplings
Hose & Fittings			M Hose and Fittings
Tubing & Fittings		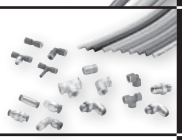	N Tubing and Fittings
Safety Guide			Model to Page Number Index
Offer of Sale			

Parker Hannifin Corporation
Pneumatic Division
Richland, Michigan
www.parker.com/pneumatics

AIR PREPARATION UNITS

Symbol	Description
	FILTER / SEPARATOR with manual drain
	FILTER / SEPARATOR with automatic drain
	OIL REMOVAL FILTER
	AUTOMATIC DRAIN
	LUBRICATOR less drain
	LUBRICATOR with manual drain
	LUBRICATOR with automatic filling
	AIR LINE PRESSURE REGULATOR adjustable, relieving
	AIR LINE PRESSURE REGULATOR pilot controlled, relieving
	FILTER / REGULATOR (piggyback) Manual Drain Relieving (With Gauge)
	FILTER / REGULATOR (piggyback) Auto Drain Relieving
	AIR LINE COMBO F-R-L simplified

PNEUMATIC VALVES

Symbol	Description
	CHECK
	FLOW CONTROL
	RELIEF VALVE

PNEUMATIC VALVES (Cont'd)

Symbol	Description
	2-POSITION 2-WAY
	2-POSITION 3-WAY
	2-POSITION 4-WAY
	2-POSITION, 4-WAY 5-PORTED
	3-POSITION, 4-WAY, APB ports closed, center pos.
	3-POSITION, 4-WAY, CE 5-PORTED cylinder ports open to exhaust in center position
	3-POSITION, 4-WAY, PC 5-PORTED pressure ports open to exhaust in center position
	QUICK EXHAUST
	SHUTTLE

VALVE ACTUATORS

Symbol	Description
	MANUAL general symbol
	PUSH BUTTON
	LEVER
	PEDAL OR TREADLE
	MECHANICAL cam, toggle, etc.
	SPRING
	DETENT line indicates which detent is in use

VALVE ACTUATORS (Cont'd)

Symbol	Description
	SOLENOID
	INTERNAL PILOT SUPPLY
complete simplified	REMOTE PILOT SUPPLY
	AND / OR COMPOSITE solenoid and pilot or manual override
	AND / OR COMPOSITE solenoid and pilot or manual override and pilot

LINES AND FUNCTIONS

Symbol	Description
	solid line – MAIN LINE
	dashed line – PILOT LINE
	dotted line – EXHAUST OR DRAIN LINE
	center line – ENCLOSURE OUTLINE
	LINES CROSSING (90° intersection not necessary)
	LINES JOINING (90° intersection not necessary)
	LINES JOINING
	FLOW DIRECTION hydraulic medium
	FLOW DIRECTION gaseous medium
	ENERGY SOURCE
	LINE WITH FIXED RESTRICTION
	LINE WITH ADJUSTABLE RESTRICTION
	FLEXIBLE LINE
	PLUGGED PORT, TEST STATION, POWER TAKE-OFF
connected / disconnected	QUICK DISCONNECT WITHOUT CHECKS
connected / disconnected	QUICK DISCONNECT WITH CHECKS
connected / disconnected	QUICK DISCONNECT WITH ONE CHECK

Parker Hannifin Corporation
Pneumatic Division
Richland, Michigan
www.parker.com/pneumatics

Saving Money and Space by Sizing Your Valves Properly
This catalog gives you a flow rating (Cv) for each valve in the Parker Hannifin line. You can "plug" *your* requirements into the following simple formula, and determine the Cv needed to do the job. By not oversizing, you'll save space and money, and you'll ensure the valve you select will do the job.

Converting the Job Requirements Into Cv (Capacity Coefficient).

$$C_v = \frac{\text{Cylinder Area (Sq. In.) (See Table 1)} \times \text{Cylinder Stroke (In.)} \times \text{Compression Factor (Table 2)} \times \text{"A" (Table 2)}}{\text{Stroke Time (sec.)} \times 28.8}$$

Let's work through an example:

We want to extend a $3^1/_4$" bore cylinder which has a 12" stroke in one second, and we have a supply pressure of 80 PSI to do the work. Here's what we know:

Cylinder Area for a 3-1/4" Bore, from Table 1 ..... 8.30 sq. in.

Cylinder Stroke ..... 12 in.

Stroke Time Required in Seconds ..... 1 sec.

Compression Factor at 80 PSI, from Table 2 ..... 6.4

"A" Constant for 80 PSI, from Table 2 ..... .048

Substituting in the formula, we have:

$$C_V = \frac{8.30 \times 12 \times 6.4 \times .048}{1 \times 28.8} = 1.06$$

Any valve, therefore, which has a Cv of *at least* 1.06, will extend our cylinder the specified distance in the required time.

Choosing the Valve "Series"
Your next step is to choose a basic valve design to do the job. For a quick guide to valve designs, see Table 3.

Having selected the basic valve design, consult the Capacity Coefficient (Cv) tables which describe the individual valve capacities.

Selecting the Valve Model, Options and Accessories
Having determined Cv, series, port size, flow-path configuration (pre-determined by circuit design), and actuation method, you're ready to choose the *exact* valve model number.

Read the pertinent catalog pages; note the exact model numbers, options and accessories you want. Then phone or write your Parker Hannifin air valve distributor. They will give you prompt, accurate service.

Note: Need circuit design help? Contact your local Parker Hannifin distributor. They are backed up by our regional Sales Engineers and offices. Between them, you'll find answers to all of your questions.

Table 1

Effective Square-Inch Areas for Standard-Bore-Size Cylinders

Bore Size	Cylinder Area (Sq. In.)	Bore Size	Cylinder Area (Sq. In.)
3/4"	.44	4"	12.57
1"	.79	4-1/2"	15.90
1-1/8"	.99	5"	19.64
1-1/4"	1.23	6"	28.27
1-1/2"	1.77	7"	38.48
1-3/4"	2.41	8"	50.27
2"	3.14	10"	78.54
2-1/2"	4.91	12"	113.10
3-1/4"	8.30	14"	153.94
3-5/8"	10.32		

Table 2

Compression Factors and "A" Constants

Inlet Pressure (PSIG)	Compression Factor	"A" Constants for Various Pressure Drop*		
		2 PSI △P	5 PSI △P	10 PSI △P
10	1.6	.152	.103	—
20	2.3	.126	.084	.065
30	3.0	.111	.073	.055
40	3.7	.100	.065	.048
50	4.4	.091	.059	.044
60	5.1	.085	.055	.040
70	5.7	.079	.051	.037
80	6.4	.075	.048	.035
90	7.1	.071	.046	.033
100	7.8	.068	.044	.032
110	8.5	.065	.042	.030
120	9.2	.063	.040	.029
130	9.9	.061	.039	.028
140	10.6	.058	.037	.027
150	11.2	.057	.036	.026
160	11.9	.055	.035	.025
170	12.6	.053	.034	.024
180	13.3	.052	.033	.024
190	14.0	.051	.032	.023
200	14.7	.050	.032	.023

Note: Use "A" constant at 5 PSI △P for most applications. On very critical applications, use "A" at 2 PSI △P. You will find in many cases, a 10 PSI △P is not detrimental, and can save money and mounting space.

* Tabulated values are the solution of $\frac{1}{22.48}\sqrt{\frac{GT}{(P_1 - P_2)\,P_2}}$ where T is for 68°F and G =1 for Air.

Table 3

Characteristics of the Major Valve Designs

A. Poppet 3-Way and 4-Way	1. High flow capacities 2. Minimum lubrication requirements 3. Fast response 4. Self-cleaning poppet seats 5. Pressures of 15 to 150 PSIG (modifications for vacuum to 250 PSIG)
B. Spool Valves (WCS) 3-Way and 4-Way	1. Low friction 2. Lower operating pressures 3. Fast response 4. Less wear 5. Long Cycle Life - Under pressure, radial expansion of the seal occurs to maintain sealing contact with the valve bore 6. Non-Lube Service - No lubrication required for continuous valve shifting 7. Bi-Directional Spool Seals - Common spool used for any pressure, including vacuum
C. Packed Bore 4-Way	1. Wide range of flow capacities 2. Wide range of flow-path configurations 3. Pilot-operated models available 4. Pressures of vacuum to 150 PSIG
D. Rotary Or Reciprocating Disc 4-Way, manually operated	1. Inexpensive 2. Versatility in manual actuation

Cv – Capacity Coefficients (sometimes called Flow Factors). Each flow path through the valve has its own Cv value. All Cv ratings for each valve cataloged on this page are listed on the front side of this sheet.

$$C_v = \frac{Q}{22.48}\sqrt{\frac{GT}{(P_1 - P_2)\,P_2}}$$

Q = Flow in Standard Cubic Feet per minute (14.7 PSIA at 60°F)
P_1 = Inlet Absolute Pressure (gauge pressure + 14.7)
P_2 = Outlet Absolute Pressure (gauge pressure + 14.7)
Note: P_2 must be greater than .53 x P_1
G = Specific Gravity of flowing medium (Air, G =1)
T = Absolute Temperature of Air (460 + °F.)

Cv = Q x "A" (Table 2)

Parker Hannifin Corporation
Pneumatic Division
Richland, Michigan
www.parker.com/pneumatics

A

The Parker 5-Year Extended Warranty

Parker Hannifin Corporation will extend its warranty on all pneumatic components to sixty (60) months providing they are correctly installed and protected by Parker pneumatic filters which are properly maintained. Components covered by this warranty include all cylinders, valves and pneumatic automation components manufactured by Parker in any of our global facilities. This warranty covers our components anywhere in the world you may ship your equipment.

Parker's obligation under this warranty is limited to the replacement or repair of any failed components. The buyer understands that the seller will not be liable for any other costs or damages.

The buyers of quality Parker components and filters benefit by having ONE source for all pneumatic needs - Parker.

R. Sherrard

Roger Sherrard
President
Automation Group

Parker
Pneumatic

Parker Hannifin Corporation
Pneumatic Division
Richland, Michigan
www.parker.com/pneumatics

Filters, Regulators, Lubricators

Global Air Preparation System

Section B

www.parker.com/globalfrl

Introduction B2-B12
Combos B14-B17
Filters B18-B23
Coalescing & Adsorber Filters B24-B29
Regulators B30-B39
Filter / Regulators B40-B45
Lubricators B46-B51
Electronic Proportional Regulator B52-B61
Combined Soft Start / Dump Valve B62-B63
Dump Valve B64-B65
Soft Start Valve B66-B67
Solenoid Operators B68-B69
Safety Lockout Valves B70
Modular Ball Valves B71
Manifold Blocks B72
Accessories B73-B75
Kits B76-B78

BOLD ITEMS ARE MOST POPULAR.

Parker Hannifin Corporation
Pneumatic Division
Richland, Michigan
www.parker.com/pneumatics

Parker Global Air Preparation System

Global.
Economical.
Modular.

Performance you need,
wherever *you need it.*

The comprehensive Global Air Preparation System is available in three body sizes with either BSPP, BSPT, or NPT to accommodate thread type requirements.

Full featured filters, regulators, filter/regulators, and lubricators are available with a wide range of standard options to meet air preparation needs.

Individual units can easily be assembled into various combinations, utilizing patented modular lightweight body connectors.

www.parker.com/globalfrl

Parker Hannifin Corporation
Pneumatic Division
Richland, Michigan
www.parker.com/pneumatics

Comprehensive Offering

P31 Mini Series
1/4" ports
40mm body width

P32 Compact Series
1/4", 3/8" and 1/2"
60mm body width

P33 Standard Series
1/2" and 3/4"
73mm body width

Filters

- 5µ particulate, 1.0µ and 0.01µ coalescing, and adsorber available as standard
- Transparent or metal bowl with manual or auto float drains standard

Regulators

- Available as stand alone, common port and electronic proportional
- Both relieving and non-relieving versions available

Filter / Regulators

- Compact design for space savings
- Available with all the same standard options as the filters and regulators

Lubricators

- Proportional oil delivery over a wide range of air flows
- Fill under pressure

Combinations

- Compact design for space savings
- Easily assembled
- Many configurations available

Accessories

- Solenoid operated soft start, quick dump, and soft start/ quick dump valves
- Manifold blocks
- Shut-off valves (both slide and ball type)
- Repair kits, gauges, etc.

Parker Hannifin Corporation
Pneumatic Division
Richland, Michigan
www.parker.com/pneumatics

Together we can power your application with clean, dry air

Fast cycle times, high product quality, and low downtime all require a clean, dry pneumatic system to function properly. Parker has what it takes to make sure pneumatic systems perform at their best.

Clean, dry pneumatic systems with Parker Global Air Preparation

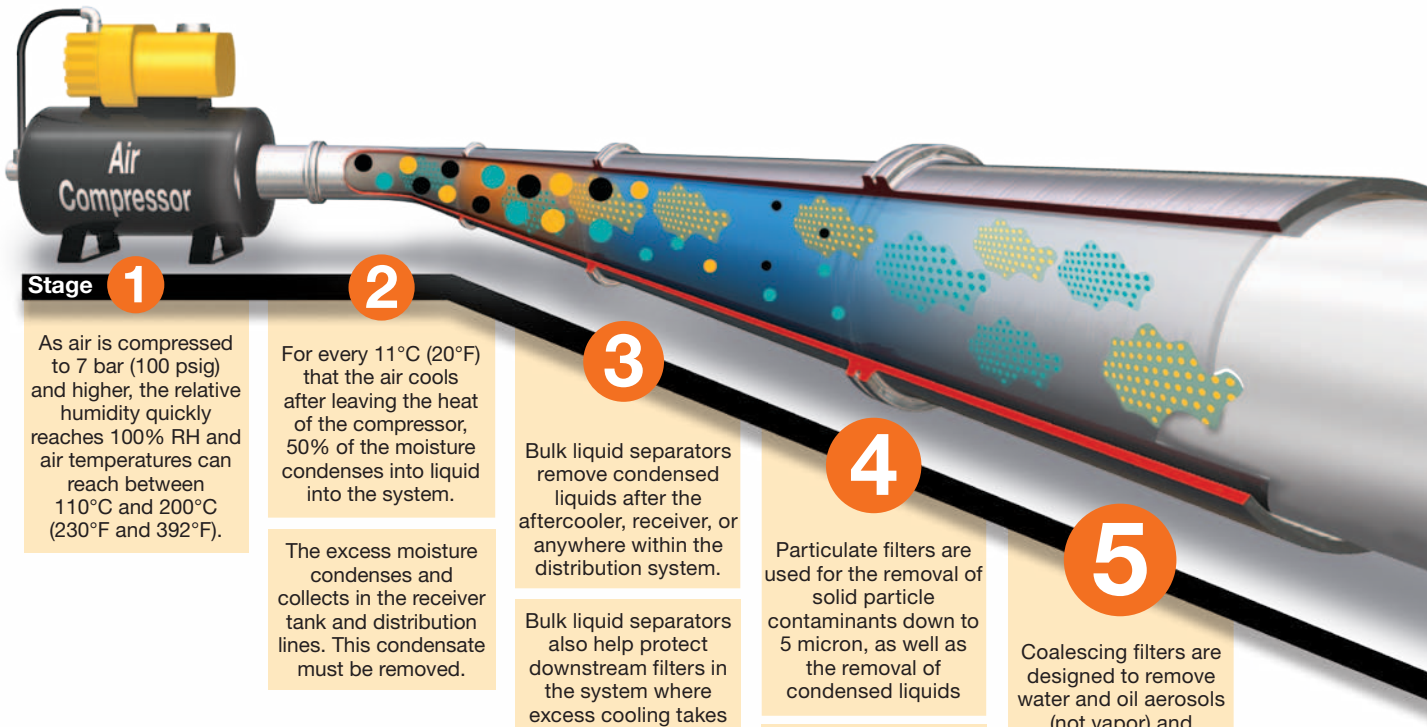

Stage 1

As air is compressed to 7 bar (100 psig) and higher, the relative humidity quickly reaches 100% RH and air temperatures can reach between 110°C and 200°C (230°F and 392°F).

2

For every 11°C (20°F) that the air cools after leaving the heat of the compressor, 50% of the moisture condenses into liquid into the system.

The excess moisture condenses and collects in the receiver tank and distribution lines. This condensate must be removed.

3

Bulk liquid separators remove condensed liquids after the aftercooler, receiver, or anywhere within the distribution system.

Bulk liquid separators also help protect downstream filters in the system where excess cooling takes place.

4

Particulate filters are used for the removal of solid particle contaminants down to 5 micron, as well as the removal of condensed liquids

Note: Water and oil, in vapor form, pass through general purpose particulate filters.

This type of filter should be used as a prefilter for the coalescing (oil removal) filter.

5

Coalescing filters are designed to remove water and oil aerosols (not vapor) and particulate from air streams down to 0.01 micron in size.

Installed in pairs, Particulate and Coalescing filters ensure a continuous supply of high quality air.

Key

- **Particulate**
- **Oil**
- **Water**
- **Oil Vapor**
- **Water Vapor**

Parker Hannifin Corporation
Pneumatic Division
Richland, Michigan
www.parker.com/pneumatics

Stages	1 2	3	4	5	6	7
Function	**Air Compressor**	**Bulk Liquid Removal**	**Particulate Filtration**	**Coalescing Filtration**	**Air Dryers**	**Hydrocarbon Removal**
Application	All pneumatic systems	Basic pneumatic systems	Basic pneumatic systems	Systems requiring highest quality air.	Systems requiring air with reduced moisture content	Systems requiring highest quality air for critical applications
Description	Air leaving the compressor room at 93°C (200°F) releases 95% of its moisture into the piping system when it cools to 38°C (100°F)	Removes bulk liquid contamination and protects filters where excess cooling takes place in the distribution piping	Removes solid particulates down to 5 micron, and the separation of bulk contaminants.	Removes liquid aerosols and submicron particulates (not vapor) down to 0.01 micron.	Removes water vapor from air stream. Dew point reduced down to 4°C (40°F) (refrigeration) or -40°C (-40°F) (desiccant).	Removal of odors and trace vapors for critical applications.
Parker Global Air Preparation Solution	Customer supplied	P3TF Bulk Liquid Separator	P31, P32, P33 Particulate Filter	P31, P32, P33 Coalescing Filter	PDRD Refrigeration Dryer P3TJ Regenerative Desiccant Dryer	P31, P32, P33 Activated Carbon (Adsorber) Filter

Parker Hannifin Corporation
Pneumatic Division
Richland, Michigan
www.parker.com/pneumatics

A completely modular air preparation system

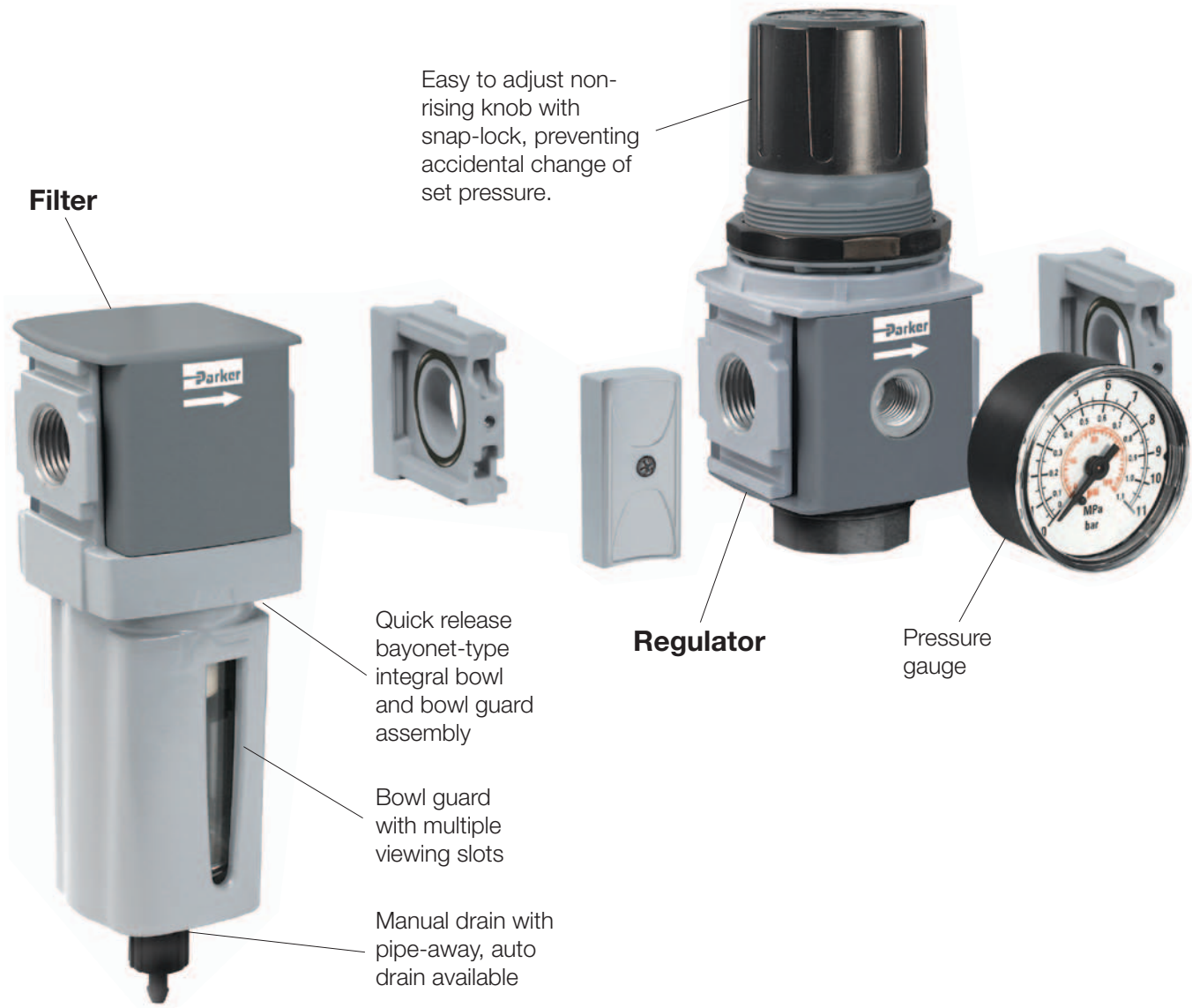

Electronic Proportional Regulator

- Electro-Pneumatic regulator
- Integrated systems control
- Accurate output pressure
- Micro parameter settings
- Selectable I/O parameters
- Quick, full flow exhaust
- LED display indicates output pressure
- No air consumption in steady state
- Multiple mounting options
- Protection to IP65

P31P Mini Series

P32P Compact Series

Parker Hannifin Corporation
Pneumatic Division
Richland, Michigan
www.parker.com/pneumatics

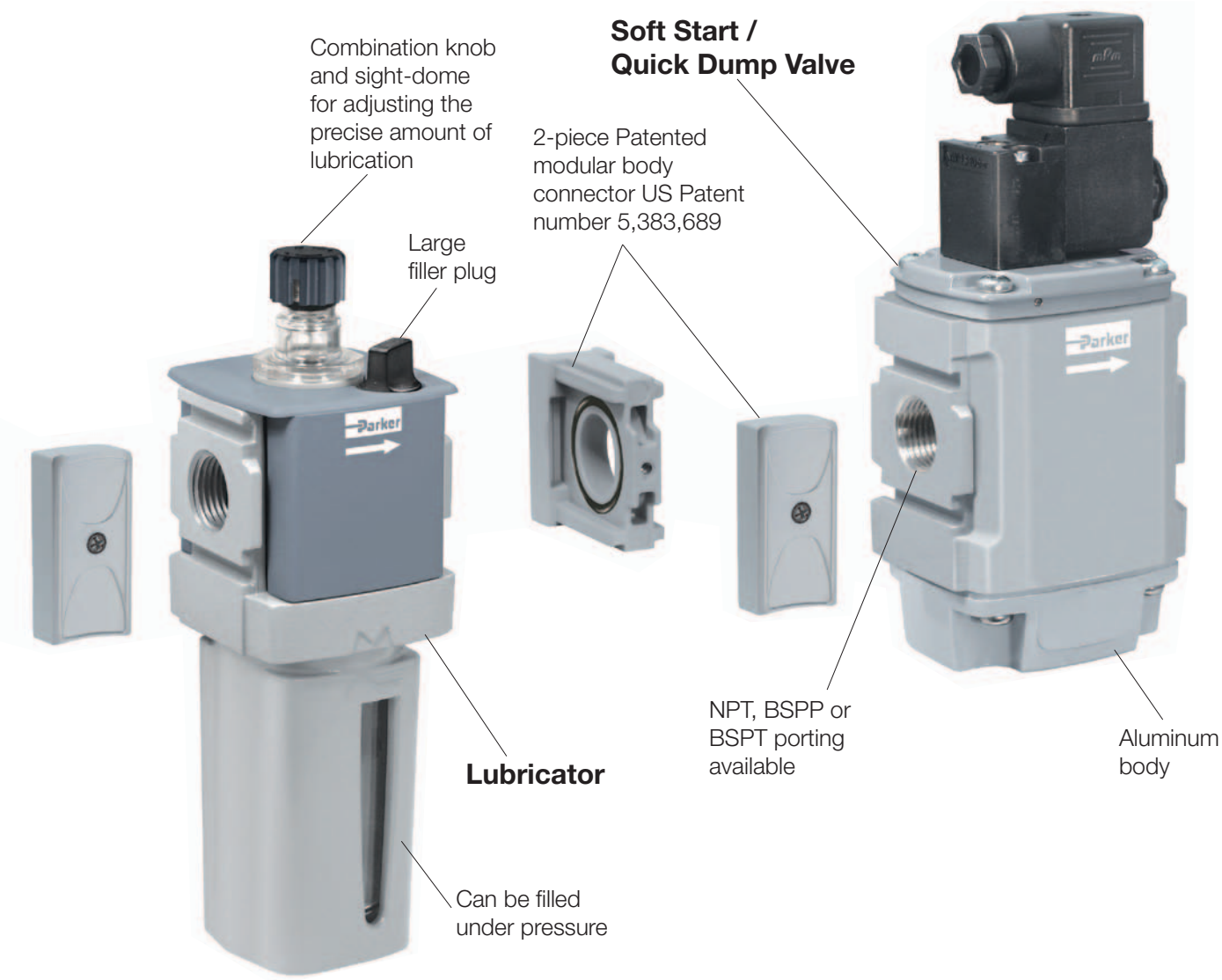

Common Port Manifold Regulators

- Multiple output pressures (P2, P3, P4, etc.) with common inlet (P1)
- Available in two sizes P31 and P32
- Balanced valve design for accurate pressure regulation
- Outlet pressure ports in front and rear of unit.
- Four spring ranges available

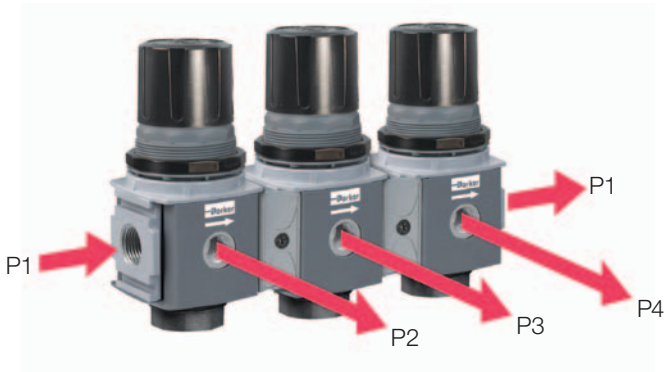

Parker Hannifin Corporation
Pneumatic Division
Richland, Michigan
www.parker.com/pneumatics

Air Preparation

P31 Mini Series

40mm body width

1/4" Ported

Flows up to:	dm^3/s	(SCFM)
Filter	12	(25)
Coalescer	2	(4.2)
Regulator	30	(64)
Filter/Regulator	14	(30)
Lubricator	13	(28)

Features:
- Space saving integral gauge
- Manifold style regulators available
- OSHA compliant shut-off valves
- Soft-Start & Quick Dump valves
- Electronic Proportional Regulator

P32 Compact Series

60mm body width

1/4", 3/8", & 1/2" Ported

Flows up to:	dm^3/s	(SCFM)
Filter	38	(80)
Coalescer	11	(23)
Regulator	67	(142)
Filter/Regulator	64	(136)
Lubricator	47	(100)

Features:
- Manifold style regulators available
- OSHA Compliant shut-off valves
- Soft-Start & Quick Dump valves
- Electronic Proportional Regulator

P33 Standard Series

73mm body width

1/2" & 3/4" Ported

Flows up to:	dm^3/s	(SCFM)
Filter	48	(102)
Coalescer	20	(42)
Regulator	100	(212)
Filter/Regulator	98	(208)
Lubricator	68	(144)

Features:
- OSHA Compliant shut-off valves
- Soft-Start & Quick Dump valves (Utilizes P32 size only)
- Electronic proportional regulator (Utilizes P32 size only)

Parker Hannifin Corporation
Pneumatic Division
Richland, Michigan
www.parker.com/pneumatics

Valves and Actuators

Mini Series Complimentary Products

The P31 Mini Series FRL's and accessories are well matched for use with these Parker valves and actuators.

Isys Micro

Moduflex Size 1

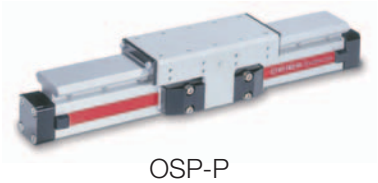
OSP-P

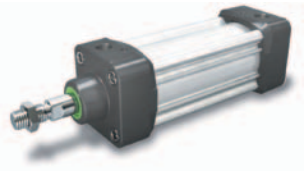
P1D

P1A

Compact Series Complimentary Products

The P32 Series FRL's & accessories are well matched for use with these Parker valves and actuators.

Isys Micro

Isys HA / HB

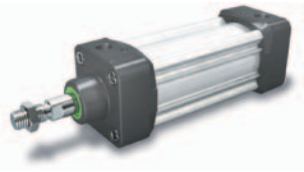
P1D

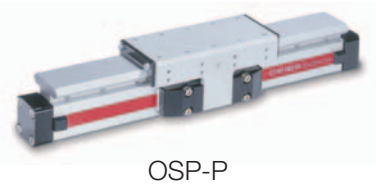
OSP-P

Standard Series Complimentary Products

The P33 Series FRL's & accessories are well matched for use with these Parker valves and actuators.

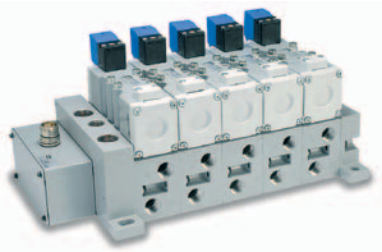
Isys Size 1

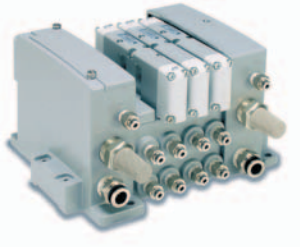
Isys HA / HB

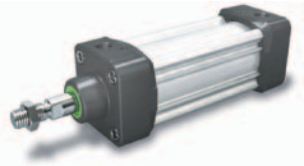
P1D

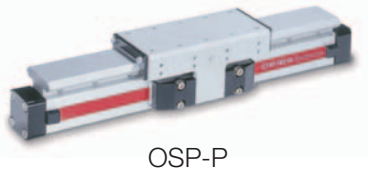
OSP-P

Parker Hannifin Corporation
Pneumatic Division
Richland, Michigan
www.parker.com/pneumatics

Complete Pneumatic System

Pressure Regulation

Accurate pressure regulation is important to control forces, speeds, torque, dispensing, processes, etc. Parker has a global solution to all of your pressure regulation needs, with support around the world.

Function	**Single**	**Common Port Manifold**	**Electronic Proportional**
Description	For pneumatic systems requiring single pressure regulation.	For pneumatic systems requiring multiple pressures for different parts of the system, yet still having a common inlet supply.	For pneumatic systems requiring an electronic to pneumatic proportional control signal. Also allows pressure regulation to be integrated into your control systems.
Parker Global Air Preparation Solution	P31R, P32R, P33R	P31H, P32H	P31P, P32P fits Compact & Standard

Accessories

Today's sophisticated pneumatic systems need more than just FRL's. Often times peripheral accessory products are needed to complete your pneumatic system. Parker has what is needed to ensure safe and reliable start-ups, shut-downs, and lockouts, etc.

Function	**Ball Valve**	**Slide Valve**	**Soft Start / Quick Dump**	**Soft Start**	**Quick Dump**	**Manifold Block**
Soft Start Function	✗	✗	✓	✓	✗	✗
Quick Dump Function	Slow Exhaust	Slow Exhaust	✓	✗	✓	✗
Operation	Manual Twist	Manual Slide	Solenoid or Air Pilot	Solenoid, Air Pilot, or Internal Air Pilot	Solenoid or Air Pilot	N/A
Placement	Before or after FRL or stand alone	Before or after FRL or stand alone	After FRL	After FRL	After FRL	Anywhere within FRL or stand alone
Parker Global Air Preparation Solution	P31V, P32V, P33V	P31V, P32V, P33V	P31T Mini, P32T fits Compact & Standard	P31S Mini, P32S fits Compact & Standard	P31D Mini, P32D fits Compact & Standard	P31M Mini, P33M fits Compact & Standard

Parker Hannifin Corporation
Pneumatic Division
Richland, Michigan
www.parker.com/pneumatics

Application Guide

FRL to Valve: The chart below contains recommendations for the correct selection of Global Air Preparation units to suit the number and size of valves in a typical application.

	P31 Mini Series					P32 Compact Series						P33 Standard Series				
	Number of valves that would actuate at once															
	1	2	3	4	5	6	7	8	9	10	11	12	13	14	15	16
Moduflex 1																
Isys Micro																
HB / Viking Xtreme																
Moduflex 2																
HA / Global ISO																
							See Larger Parker FRL Offering									

Actuator to FRL: The chart below contains recommendations for the correct selection of Global Air Preparation units suitable for each cylinder size.If you have a tube length over 2 m, choose one tube size larger than the chart. The table is based on a Maximum cylinder speed of 0.5m/s

Cyl Ø mm Cyl Ø inches		Cylinder bore size													
		5 (5/16)	10 (7/16)	16 (9/16)	20 (3/4)	25 (1)	28 (1-1/8)	32 (1-1/4)	40 (1-1/2)	45 (1-3/4)	50 (2)	63 (2-1/2)	75 (3)	80 (3-1/4)	100 (4)
Tube Ø mm Tube Ø inches		Tube diameter external													
		4 (5/32)	4 (5/32)	4 (5/32)	6 (1/4)	6 (1/4)	6 (1/4)	6 (1/4)	8 (5/16)	8 (5/16)	8 (5/16)	10 (3/8)	10 (3/8)	12 (1/2)	12 (1/2)
Number of cylinders actuating at once	1														
	2														
	3														
	4														
	5														
	6														
	7														
	8														
	9														
	10														
		P31 Mini Series 					P32 Compact Series 			P33 Standard Series 			See Larger Parker FRL Offering		

Note: Data listed above is simply a guideline for a typical application only. Proper sizing and correct flow requirements must be taken into account.

Parker Hannifin Corporation
Pneumatic Division
Richland, Michigan
www.parker.com/pneumatics

B

Product Selection Chart

Basic Unit	Series	Port Size				Bowls			Elements (Micron)			Adsorber	Page
		1/4	3/8	1/2	3/4	Poly with Bowl Guard	Metal without SG	Metal SG	0.01	1	5		
FILTERS	P31	X	—	—	—	X	X	—	—	—	Std.	—	B18
	P32	X	X	X	—	X	X	X	—	—	Std.	—	B20
	P33	—	—	X	X	X	X	X	—	—	Std.	—	B22
COALESCING FILTERS	P31	X	—	—	—	X	X	—	Std.	Std.	—	Std.	B24
	P32	X	X	X	—	X	X	X	Std.	Std.	—	Std.	B26
	P33	—	—	X	X	X	X	X	Std.	Std.	—	Std.	B28

Basic Unit		Series	Port Size				Adjustment Range				Page
			1/4	3/8	1/2	3/4	30 psig 2 bar	60 psig 4 bar	125 psig 8 bar	250 psig 17 bar	
REGULATORS	STANDARD	P31	X	—	—	—	Std.	Std.	Std.	—	B30
		P32	X	X	X	—	Std.	Std.	Std.	Std.	B34
		P33	—	—	X	X	Std.	Std.	Std.	Std.	B38
	COMMON PILOT	P31	X	—	—	—	Std.	Std.	Std.	—	B32
		P32	X	X	X	—	Std.	Std.	Std.	Std.	B36

Basic Unit		Series	Port Size				Bowls			Elements (Micron)	Adjustment Range				Page
			1/4	3/8	1/2	3/4	Poly with Bowl Guard	Metal without SG	Metal SG	5	15	25	30	60	
FILTER REGULATOR		P31	X	—	—	—	X	X	—	Std.	Opt.	—	Opt.	Opt.	B40
		P32	X	X	X	—	X	X	X	Std.	—	—	Opt.	Std.	B42
		P33	—	—	X	X	X	X	X	Std.	—	—	Opt.	Opt.	B44
LUBRICATORS		P31	X	X	—	—	X	—	X	Can be filled under pressure					B46
		P32	X	X	X	—	X	—	X	Can be filled under pressure					B48
		P33	—	—	X	X	X	—	X	Can be filled under pressure					B50

Parker Hannifin Corporation
Pneumatic Division
Richland, Michigan
www.parker.com/pneumatics

Notes

Parker Hannifin Corporation
Pneumatic Division
Richland, Michigan
www.parker.com/pneumatics

Popular Combinations

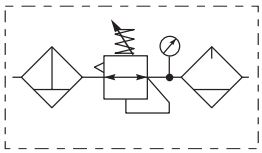

Filter + Regulator + Lubricator Combinations + Poly bowl
5 micron element, 8 bar (116 psig) Regulator + Gauge and Wall Mounting Brackets
Inlet pressure 10 bar (145 psig), Secondary pressure 6.3 bar (91.3 psig),
1 bar (14.5 psig) pressure drop.

Port size	Flow dm^3/s	Flow (scfm)	Manual Drain	Weight	Pulse Drain	Weight
1/4"	13	27	**P31CB92GEMN5LNW**	0.46 kg (1.01 lbs)	**P31CB92GEBN5LNW**	0.46 kg (1.01 lbs)

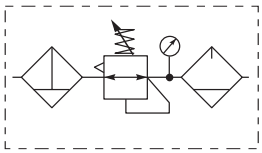

Filter/Regulator + Lubricator Combinations + Poly bowl
5 micron element, 8 bar (116 psig) Regulator + Gauge and Wall Mounting Brackets
Inlet pressure 10 bar (145 psig), Secondary pressure 6.3 bar (91.3 psig),
1 bar (14.5 psig) pressure drop.

Port size	Flow dm^3/s	Flow (scfm)	Manual Drain	Weight	Pulse Drain	Weight
1/4"	14	28	**P31CA92GEMN5LNW**	0.35 kg (0.77 lbs)	**P31CA92GEBN5LNW**	0.35 kg (0.77 lbs)

P 3 1 □ □ □ □ □

Combination	
B/V + Combination	**Q**
Combination + B/V	**X**
Combination	**C**
Shut off + Combination	**Y**
Combination + Shut off	**Z**

Thread type	
BSPP	**1**
BSPT	**2**
NPT	**9**

Port size	
1/4	**2**

Combination type*			
F/R+L	**A**	F+Fc+Fa	**G**
F+R+L	**B**	F/R+Fc	**M**
F+Fc	**F**	F+Fc1+Fc	**Q**

* Combination type
F = 5µ
Fc1 = 1µ
Fc = .01µ
Fa = Adsorber

Bowl type	
Poly bowl with bowl guard	**G**
Metal bowl without sight gauge	**M**

Note: All bowl types are the same for each component

Example: If a "G" is specified for a F+L, both units would get a poly bowl with bowl guard.

Filter / Regulator coding
(use with codes: A M)

Filter coding
(use with combo codes: B F G). For multiple filters, repeat as needed

□ □

Element	
5µ Element	**E**
0.01µ Element	**C**
1µ Element	**9**
Adsorber	**A**

Drain type	
Manual drain	**M**
Pulse drain	**B**

Regulator coding
(use with combo code: B)

□ □

Relief / Adjustment	
Non-rising knob	**N**

Adjustment range	
With square gauge	
psig	**bar**
30* = **1**	2* = **V**
60 = **3**	4 = **S**
125 = **5**	8 = **T**
Without gauge†	
psig	**bar**
30 = **Y**	2 = **Y**
60 = **L**	4 = **L**
125 = **N**	8 = **N**

* Unit comes with 0-4 bar or 0-60 psig gauge respectively.
† Order round gauges separately - see page B31.

Lubricator coding
(use with combo codes: A B)

□ □

Lub type	
Oil mist standard sight dome	**L**

Drain type	
No drain; closed end	**N**

Assembly configuration

□

Mounting	
No bracket	**A**
Port blocks	**C***
Port blocks & wall brkt	**D***
Wall bracket	**W**

* For 3/8" Port Blocks please order separately. See Kits section.

Parker Hannifin Corporation
Pneumatic Division
Richland, Michigan
www.parker.com/pneumatics

Popular Combinations

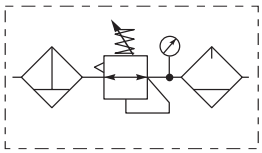

Filter + Regulator + Lubricator Combinations + Poly bowl
5 micron element, 8 bar (116 psig) Regulator + Gauge and Wall Mounting Brackets
Inlet pressure 10 bar (145 psig), Secondary pressure 6.3 bar (91.3 psig),
1 bar (14.5 psig) pressure drop.

Port size	Flow dm^3/s	Flow (scfm)	Manual Drain	Weight	Auto Drain	Weight
1/4"	20	42	**P32CB92GEMNGLNW**	1.29 kg (2.84 lbs)	**P32CB92GEANGLNW**	1.29 kg (2.84 lbs)
3/8"	32	68	**P32CB93GEMNGLNW**	1.29 kg (2.84 lbs)	**P32CB93GEANGLNW**	1.29 kg (2.84 lbs)
1/2"	40	85	**P32CB94GEMNGLNW**	1.29 kg (2.84 lbs)	**P32CB94GEANGLNW**	1.29 kg (2.84 lbs)

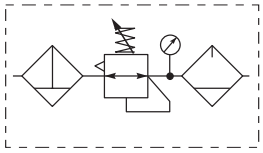

Filter/Regulator + Lubricator Combinations + Poly bowl
5 micron element, 8 bar (116 psig) Regulator + Gauge and Wall Mounting Brackets
Inlet pressure 10 bar (145 psig), Secondary pressure 6.3 bar (91.3 psig),
1 bar (14.5 psig) pressure drop.

Port size	Flow dm^3/s	Flow (scfm)	Manual Drain	Weight	Auto Drain	Weight
1/4"	22	45	**P32CA92GEMNGLNW**	1.03 kg (2.27 lbs)	**P32CA92GEANGLNW**	1.03 kg (2.27 lbs)
3/8"	33	70	**P32CA93GEMNGLNW**	1.03 kg (2.27 lbs)	**P32CA93GEANGLNW**	1.03 kg (2.27 lbs)
1/2"	43	90	**P32CA94GEMNGLNW**	1.03 kg (2.27 lbs)	**P32CA94GEANGLNW**	1.03 kg (2.27 lbs)

P 3 2

Combination

B/V + Combination	Q
Combination + B/V	X
Combination	C
Shut off + Combination	Y
Combination + Shut off	Z

Combination type*

F/R+L	A	F+Fc+Fa	G
F+R+L	B	F/R+Fc	M
F+Fc	F	F+Fc1+Fc	Q

* Combination type
F = 5µ
Fc1 = 1µ
Fc = .01µ
Fa = Adsorber

Thread type

BSPP	1
BSPT	2
NPT	9

Port size

1/4	2
3/8	3
1/2	4

Bowl type

Poly bowl with bowl guard	G
Metal bowl without sight gauge	M
Metal bowl with sight gauge	S

Note: All bowl types are the same for each component

Example: If a "G" is specified for a F+L, both units would get a poly bowl with bowl guard.

Filter / Regulator coding
(use with codes: A M)

Filter coding
(use with combo codes: B F G). For multiple filters, repeat as needed

Element

0.01µ Element	C
0.01µ Element with dpi	D
5µ Element	E
5µ Element with dpi	F
1µ Element	9
1µ Element with dpi	Q
Adsorber	A

Drain type

Auto drain	A
Manual drain	M

Regulator coding
(use with combo code: B)

Relief / Adjustment

Non-rising knob relieving	N

Adjustment range

With round gauge	
2 bar; 30 psig; 0.2 MPa	Z
4 bar; 60 psig; 0.4 MPa	M
8 bar; 125 psig; 0.8 MPa	G
17 bar; 250 psig; 1.7 MPa	J*
Without gauge	
2 bar; 30 psig; 0.2 MPa	Y
4 bar; 60 psig; 0.4 MPa	L
8 bar; 125 psig; 0.8 MPa	N
17 bar; 250 psig; 1.7 MPa	H*

* Not available with poly bowl with bowl guard.

Lubricator coding
(use with combo codes: A B)

Lub type

Oil mist standard sight dome	L

Drain type

No drain; closed end	N

Assembly configuration

Mounting

No bracket	A
Port blocks	C
Port blocks & wall brkt	D
Wall bracket	W

Parker Hannifin Corporation
Pneumatic Division
Richland, Michigan
www.parker.com/pneumatics

Popular Combinations

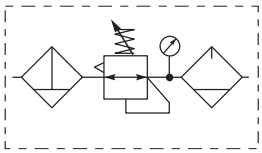

Filter + Regulator + Lubricator Combinations + Poly bowl
5 micron element, 8 bar (116 psig) Regulator + Gauge and Wall Mounting Brackets
Inlet pressure 10 bar (145 psig), Secondary pressure 6.3 bar (91.3 psig),
1 bar (14.5 psig) pressure drop.

Port size	Flow dm^3/s	Flow (scfm)	Manual Drain	Weight	Auto Drain	Weight
1/2"	43	90	**P33CB94GEMNGLNW**	1.84 kg (4.06 lbs)	**P33CB94GEANGLNW**	1.84 kg (4.06 lbs)
3/4"	52	110	**P33CB96GEMNGLNW**	1.84 kg (4.06 lbs)	**P33CB96GEANGLNW**	1.84 kg (4.06 lbs)

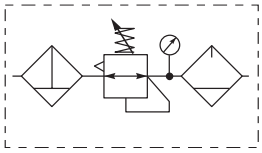

Filter/Regulator + Lubricator Combinations + Poly bowl
5 micron element, 8 bar (116 psig) Regulator + Gauge and Wall Mounting Brackets
Inlet pressure 10 bar (145 psig), Secondary pressure 6.3 bar (91.3 psig),
1 bar (14.5 psig) pressure drop.

Port size	Flow dm^3/s	Flow (scfm)	Manual Drain	Weight	Auto Drain	Weight
1/2"	52	110	**P33CA94GEMNGLNW**	1.51 kg (3.33 lbs)	**P33CA94GEANGLNW**	1.51 kg (3.33 lbs)
3/4"	71	150	**P33CA96GEMNGLNW**	1.51 kg (3.33 lbs)	**P33CA96GEANGLNW**	1.51 kg (3.33 lbs)

P 3 3 □ □ □ □ □

Combination

B/V + Combination	Q
Combination + B/V	X
Combination	C
Shut off + Combination	Y
Combination + Shut off	Z

Thread type

BSPP	1
BSPT	2
NPT	9

Port size

1/2	4
3/4	6

Combination type*

F/R+L	A	F+Fc+Fa	G
F+R+L	B	F/R+Fc	M
F+Fc	F	F+Fc1+Fc	Q

* Combination type
F = 5µ
Fc1 = 1µ
Fc = .01µ
Fa = Adsorber

Bowl type

Poly bowl with bowl guard	G
Metal bowl without sight gauge	M
Metal bowl with sight gauge	S

Note: All bowl types are the same for each component

Example: If a "G" is specified for a F+L, both units would get a poly bowl with bowl guard.

Filter / Regulator coding
(use with codes: A M)

Filter coding
(use with combo codes: B F G). For multiple filters, repeat as needed

Element

0.01µ Element	C
0.01µ Element with dpi	D
5µ Element	E
5µ Element with dpi	F
1µ Element	9
1µ Element with dpi	Q
Adsorber	A

Drain type

Auto drain	A
Manual drain	M

Regulator coding
(use with combo code: B)

Relief / Adjustment

Non-rising knob relieving	N

Adjustment range

With round gauge	
2 bar; 30 psig; 0.2 MPa	Z
4 bar; 60 psig; 0.4 MPa	M
8 bar; 125 psig; 0.8 MPa	G
17 bar; 250 psig; 1.7 MPa	J*
Without gauge	
2 bar; 30 psig; 0.2 MPa	Y
4 bar; 60 psig; 0.4 MPa	L
8 bar; 125 psig; 0.8 MPa	N
17 bar; 250 psig; 1.7 MPa	H*

* Not available with poly bowl with bowl guard.

Lubricator coding
(use with combo codes: A B)

Lub type

Oil mist standard sight dome	L

Drain type

No drain; closed end	N

Assembly configuration

Mounting

No bracket	A
Port blocks	C
Port blocks & wall brkt	D
Wall bracket	W

Parker Hannifin Corporation
Pneumatic Division
Richland, Michigan
www.parker.com/pneumatics

Popular Combination Dimensions mm (inches)

P31C

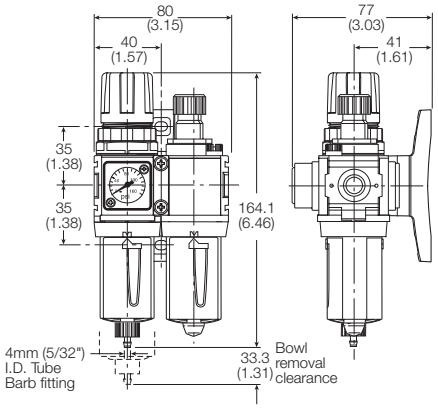

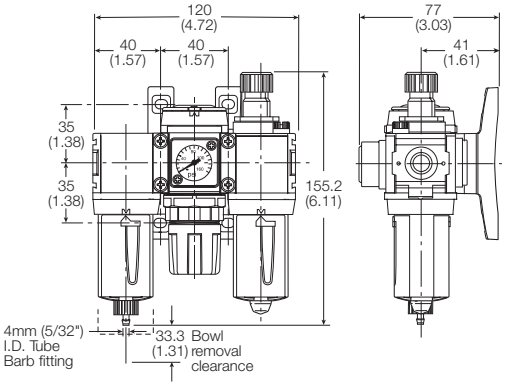

P32C

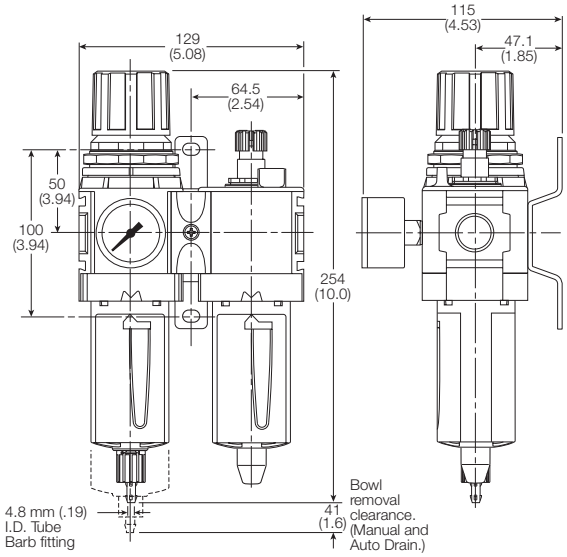

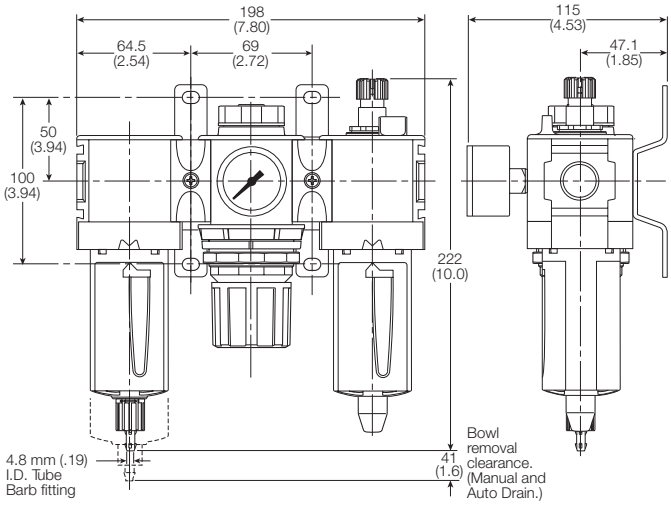

P33C

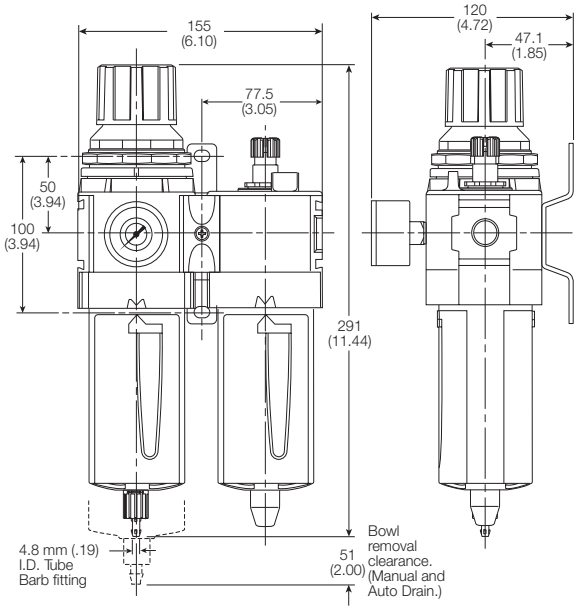

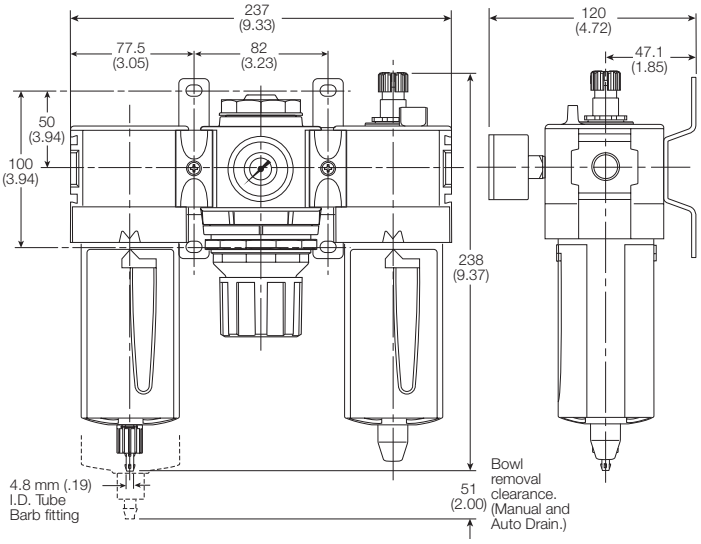

Parker Hannifin Corporation
Pneumatic Division
Richland, Michigan
www.parker.com/pneumatics

P31 Mini Particulate Filter

Symbols

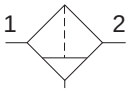

Manual drain

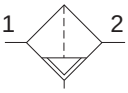

Auto drain

Features

- Integral 1/4" ports (NPT, BSPP & BSPT)
- High efficiency 5 micron element as standard
- Excellent water removal efficiency
- Robust but lightweight aluminum construction
- One hand operation for easy element cartridge removal
- Positive bayonet latch to ensure correct & safe fitting

Ordering Information

P 3 1 F ***** [ ] [ ] **E** [ ] [ ] **N**

Engr. level	
* Will be entered at factory	

Thread type	
BSPP	**1**
BSPT	**2**
NPT	**9**

Port size	
1/4	**2**

Element	
5µ Element	**E**

Bowl type	
Poly bowl with bowl guard	**G**
Metal bowl without sight gauge	**M**

Drain type	
Pulse drain	**B**
Manual drain	**M**

Mounting	
No bracket	**N**

*** Engineering Level will be entered at factory.**

Port size	Description	Order Code†	Flow‡ dm^3/s (scfm)	Max. bar (psig)	Height mm (inches)	Width mm (inches)	Depth mm (inches)
1/4"	Poly bowl - Manual drain	**P31F*92EGMN**	12 (25)	10 (150)	116.3 (4.58)	40 (1.58)	42.7 (1.68)
1/4"	Poly bowl - Pulse drain	**P31F*92EGBN**	12 (25)	10 (150)	116.3 (4.58)	40 (1.58)	42.7 (1.68)
1/4"	Metal bowl - Manual drain	**P31F*92EMMN**	12 (25)	17 (250)	116.3 (4.58)	40 (1.58)	42.7 (1.68)
1/4"	Metal bowl - Pulse drain	**P31F*92EMBN**	12 (25)	17 (250)	116.3 (4.58)	40 (1.58)	42.7 (1.68)

† **Standard part numbers shown in bold. For other models refer to Ordering Information chart above.**
‡ Flow with 6.3 bar (91.3 psig) inlet pressure and 0.34 (4.9 psig) pressure drop.

Parker Hannifin Corporation
Pneumatic Division
Richland, Michigan
www.parker.com/pneumatics

Specifications

Flow Capacity*	1/4	12 dm^3/s (25 scfm)
Operating Temperature	Plastic Bowl	-10°C to 52°C (14°F to 125°F)
	Metal Bowl	-10°C to 65.5°C (14°F to 150°F)
Max. Supply Pressure	Plastic Bowl	10 bar (150 psig)
	Metal Bowl	17 bar (250 psig)
Standard Filtration		5 Micron
Useful Retention†		12 cm^3 (0.4 US oz.)
Port Size	BSPP / BSPT / NPT	1/4
Weight		0.11 kg (0.24 lbs)

* Inlet pressure 6.3 bar (91.3 psig). Pressure drop 0.34 bar (4.9 psig).
† Useful retention refers to volume below the quiet zone baffle.

Air quality:
Within ISO 8573-1: 1991 Class 3 (Particulates)
Within ISO 8573-1: 2001 Class 6 (Particulates)

Materials of Construction

Body	Aluminum
Body Cap	ABS
Bowl	Polycarbonate
Bowl Guard	Nylon
Element Retainer	Acetal
Baffle	Acetal
Filter Element	Sintered Polyethylene
Seals	Nitrile

Flow Charts

1/4 Filter

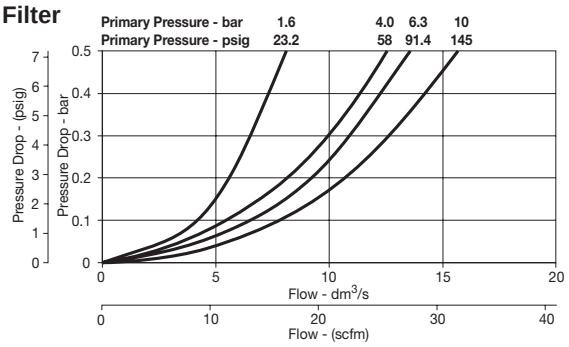

Dimensions

mm (inches)

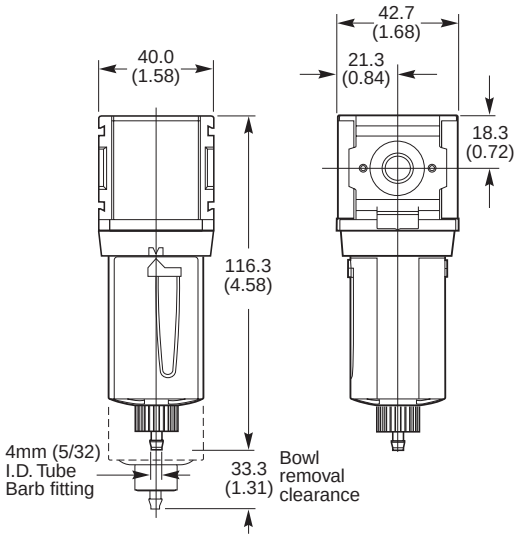

Repair and Service Kits

Plastic bowl / Bowl guard manual drain	**P31KA00BGM**
Metal bowl / w/o sight gauge manual drain	**P31KA00BMM**
Plastic bowl / Bowl guard pulse drain	**P31KA00BGB**
Metal bowl / w/o sight gauge pulse drain	**P31KA00BMB**
5µ particle filter element	**P31KA00ESE**
C-Bracket (fits to body)	**P31KA00MW**
T-Bracket with body connector	**P31KA00MT**
Body connector	**P31KA00CB**

Parker Hannifin Corporation
Pneumatic Division
Richland, Michigan
www.parker.com/pneumatics

P32 Compact Particulate Filter

Symbols

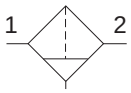

Manual drain

Auto drain

Features

- Integral 1/4", 3/8" or 1/2" ports (NPT, BSPP & BSPT)
- High efficiency 5 micron element as standard
- Excellent water removal efficiency
- Robust but lightweight aluminum construction
- Positive bayonet latch to ensure correct & safe fitting

Ordering Information

P 3 2 F ***** ☐ ☐ **E** ☐ ☐ **N**

Engr. level
* Will be entered at factory

Thread type	
BSPP	**1**
BSPT	**2**
NPT	**9**

Port size	
1/4	**2**
3/8	**3**
1/2	**4**

Element	
5µ Element	**E**
5µ Element w/ DPI	**F**

Bowl type	
Poly bowl with bowl guard	**G**
Metal bowl without sight gauge	**M**
Metal bowl with sight gauge	**S**

Drain type	
Manual drain	**M**
Auto drain	**A**

Mounting	
No bracket	**N**

*** Engineering Level will be entered at factory.**

Port size	Description	Order Code†	Flow‡ dm^3/s (scfm)	Max. bar (psig)	Height mm (inches)	Width mm (inches)	Depth mm (inches)
1/4"	Poly bowl - Manual drain	**P32F*92EGMN**	18 (38)	10 (150)	188 (7.4)	60 (2.36)	60 (2.36)
1/4"	Poly bowl - Auto drain	**P32F*92EG*N**	18 (38)	10 (150)	182 (7.2)	60 (2.36)	60 (2.36)
1/4"	Metal bowl - Manual drain	**P32F*92ESMN**	18 (38)	17 (250)	188 (7.4)	60 (2.36)	60 (2.36)
1/4"	Metal bowl - Auto drain	**P32F*92ES*N**	18 (38)	17 (250)	182 (7.2)	60 (2.36)	60 (2.36)
3/8"	Poly bowl - Manual drain	**P32F*93EGMN**	30 (64)	10 (150)	188 (7.4)	60 (2.36)	60 (2.36)
3/8"	Poly bowl - Auto drain	**P32F*93EG*N**	30 (64)	10 (150)	182 (7.2)	60 (2.36)	60 (2.36)
3/8"	Metal bowl - Manual drain	**P32F*93ESMN**	30 (64)	17 (250)	188 (7.4)	60 (2.36)	60 (2.36)
3/8"	Metal bowl - Auto drain	**P32F*93ES*N**	30 (64)	17 (250)	182 (7.2)	60 (2.36)	60 (2.36)
1/2"	Poly bowl - Manual drain	**P32F*94EGMN**	38 (80)	10 (150)	188 (7.4)	60 (2.36)	60 (2.36)
1/2"	Poly bowl - Auto drain	**P32F*94EG*N**	38 (80)	10 (150)	182 (7.2)	60 (2.36)	60 (2.36)
1/2"	Metal bowl - Manual drain	**P32F*94ESMN**	38 (80)	17 (250)	188 (7.4)	60 (2.36)	60 (2.36)
1/2"	Metal bowl - Auto drain	**P32F*94ES*N**	38 (80)	17 (250)	182 (7.2)	60 (2.36)	60 (2.36)

† **Standard part numbers shown in bold. For other models refer to Ordering Information chart above.**
‡ Flow with 6.3 bar (91.3 psig) inlet pressure and 0.34 (4.9 psig) pressure drop.

Parker Hannifin Corporation
Pneumatic Division
Richland, Michigan
www.parker.com/pneumatics

Specifications

Flow Capacity*	1/4	18 dm^3/s (38 scfm)
	3/8	30 dm^3/s (64 scfm)
	1/2	38 dm^3/s (80 scfm)
Operating Temperature	Plastic Bowl	-25°C to 52°C (-13°F to 125°F)
	Metal Bowl	-25°C to 65.5°C (-13°F to 150°F)
Max. Supply Pressure	Plastic Bowl	10 bar (150 psig)
	Metal Bowl	17 bar (250 psig)
Standard Filtration		5 Micron
Useful Retention†		51 cm^3 (1.7 US oz.)
Port Size	BSPP / BSPT / NPT	1/4, 3/8, 1/2
Weight		0.28 kg (0.62 lbs)

* Inlet pressure 6.3 bar (91.3 psig). Pressure drop 0.34 bar (4.9 psig).
† Useful retention refers to volume below the quiet zone baffle.

Air quality:
Within ISO 8573-1: 1991 Class 3 (Particulates)
Within ISO 8573-1: 2001 Class 6 (Particulates)

Materials of Construction

Body		Aluminum
Body Cap		ABS
Bowls	Plastic Bowl	Polycarbonate
	Metal Bowl	Aluminum
Bowl Guard		Nylon
Deflector		Polypropylene
Element Retainer / Baffle		Acetal
Filter Element		Sintered Polyethylene
Seals	Plastic Bowl	Nitrile
	Metal Bowl	Nitrile
Sight Gauge	Metal Bowl	Polycarbonate

Dimensions

mm (inches)

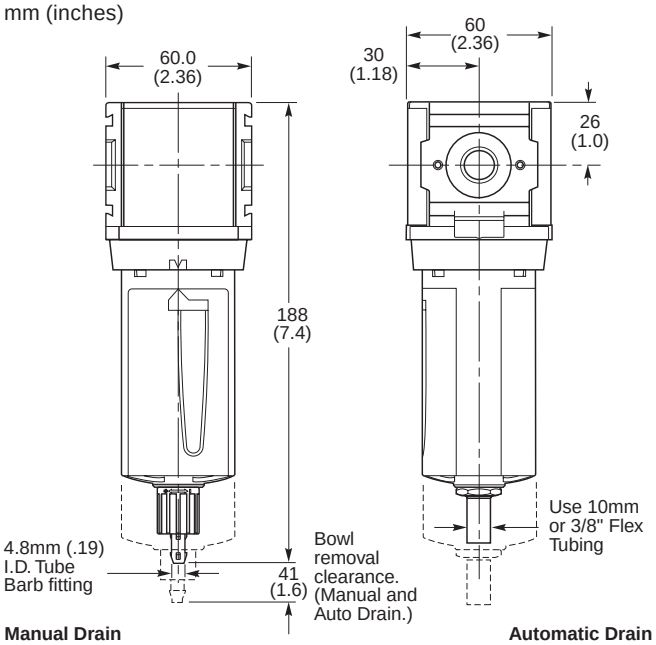

Manual Drain **Automatic Drain**

Flow Charts

1/4 Filter

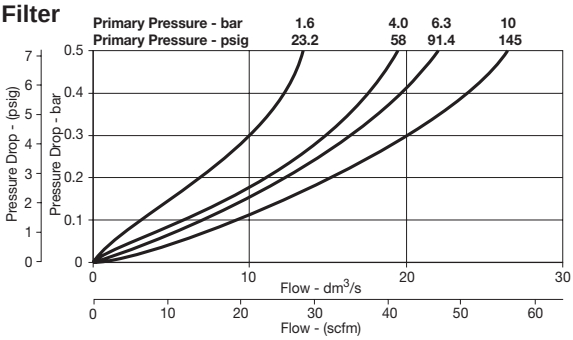

3/8 Filter

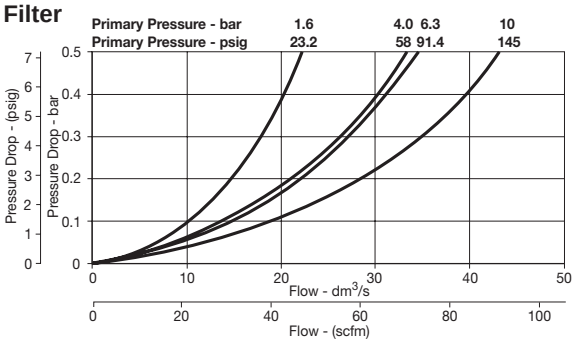

1/2 Filter

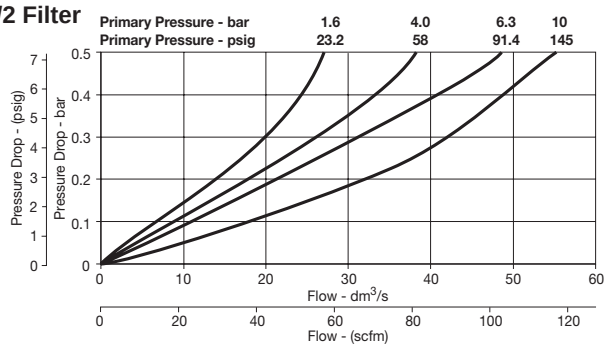

Repair and Service Kits

Plastic bowl / Bowl guard manual drain	**P32KA00BGM**
Metal bowl / Sight gauge manual drain	**P32KA00BSM**
Auto drain	**P32KA00DA**
5µ particle filter element	**P32KA00ESE**
L-Bracket (fits to body)	**P32KA00ML**
T-Bracket (fits to body connector)	**P32KA00MB**
T-Bracket with body connector	**P32KA00MT**
Body connector	**P32KA00CB**
Differential pressure indicator (replacement)	**P32KA00RQ**

Parker Hannifin Corporation
Pneumatic Division
Richland, Michigan
www.parker.com/pneumatics

P33 Standard Particulate Filter

Symbols

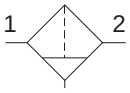

Manual drain

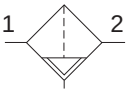

Auto drain

Features

- Integral 1/2" or 3/4" ports (NPT, BSPP & BSPT)
- High efficiency 5 micron element as standard
- Excellent water removal efficiency
- Robust but lightweight aluminum construction
- Positive bayonet latch to ensure correct & safe fitting

Ordering Information

P 3 3 F [*] [ ] [ ] [E] [ ] [ ] [N]

Engr. level
* Will be entered at factory

Thread type	
BSPP	**1**
BSPT	**2**
NPT	**9**

Port size	
1/2	**4**
3/4	**6**

Element	
5µ Element	**E**
5µ Element w/ DPI	**F**

Bowl type	
Poly bowl with bowl guard	**G**
Metal bowl without sight gauge	**M**
Metal bowl with sight gauge	**S**

Drain type	
Manual drain	**M**
Auto drain	**A**

Mounting	
No bracket	**N**

*** Engineering Level will be entered at factory.**

Port size	Description	Order Code†	Flow‡ dm^3/s (scfm)	Max. bar (psig)	Height mm (inches)	Width mm (inches)	Depth mm (inches)
1/2"	Poly bowl - Manual drain	**P33F*94EGMN**	40 (85)	10 (150)	213 (8.4)	73 (2.9)	73 (2.9)
1/2"	Poly bowl - Auto drain	**P33F*94EG*N**	40 (85)	10 (150)	207 (8.2)	73 (2.9)	73 (2.9)
1/2"	Metal bowl - Manual drain	**P33F*94ESMN**	40 (85)	17 (250)	213 (8.4)	73 (2.9)	73 (2.9)
1/2"	Metal bowl - Auto drain	**P33F*94ES*N**	40 (85)	17 (250)	207 (8.2)	73 (2.9)	73 (2.9)
3/4"	Poly bowl - Manual drain	**P33F*96EGMN**	48 (102)	10 (150)	213 (8.4)	73 (2.9)	73 (2.9)
3/4"	Poly bowl - Auto drain	**P33F*96EG*N**	48 (102)	10 (150)	207 (8.2)	73 (2.9)	73 (2.9)
3/4"	Metal bowl - Manual drain	**P33F*96ESMN**	48 (102)	17 (250)	213 (8.4)	73 (2.9)	73 (2.9)
3/4"	Metal bowl - Auto drain	**P33F*96ES*N**	48 (102)	17 (250)	207 (8.2)	73 (2.9)	73 (2.9)

† **Standard part numbers shown in bold. For other models refer to Ordering Information chart above.**
‡ Flow with 6.3 bar (91.3 psig) inlet pressure and 0.34 (4.9 psig) pressure drop.

Parker Hannifin Corporation
Pneumatic Division
Richland, Michigan
www.parker.com/pneumatics

Specifications

Flow Capacity*	1/2	40 dm^3/s (85 scfm)
	3/4	48 dm^3/s (102 scfm)
Operating Temperature	Plastic Bowl	-25°C to 52°C (-13°F to 125°F)
	Metal Bowl	-25°C to 65.5°C (-13°F to 150°F)
Max. Supply Pressure	Plastic Bowl	10 bar (150 psig)
	Metal Bowl	17 bar (250 psig)
Standard Filtration		5 Micron
Useful Retention†		85 cm^3 (2.8 US oz.)
Port Size	BSPP / BSPT / NPT	1/2, 3/4
Weight		0.46 kg (1.01 lbs)

* Inlet pressure 6.3 bar (91.3 psig). Pressure drop 0.34 bar (4.9 psig).
† Useful retention refers to volume below the quiet zone baffle.

Air quality:
Within ISO 8573-1: 1991 Class 3 (Particulates)
Within ISO 8573-1: 2001 Class 6 (Particulates)

Materials of Construction

Body		Aluminum
Body Cap		ABS
Bowls	Plastic Bowl	Polycarbonate
	Metal Bowl	Aluminum
Bowl Guard		Nylon
Deflector		Polypropylene
Element Retainer / Baffle		Acetal
Filter Element		Sintered Polyethylene
Seals	Plastic Bowl	Nitrile
	Metal Bowl	Nitrile
Sight Gauge	Metal Bowl	Polycarbonate

Flow Charts

1/2 Filter

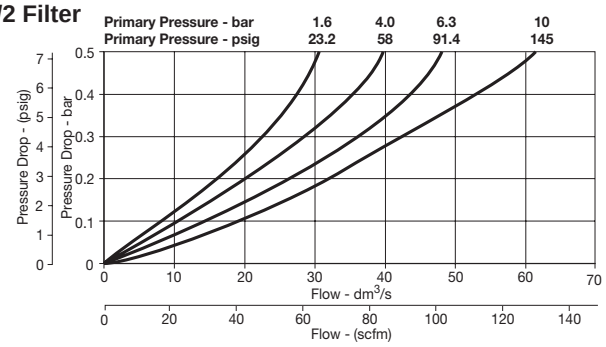

3/4 Filter

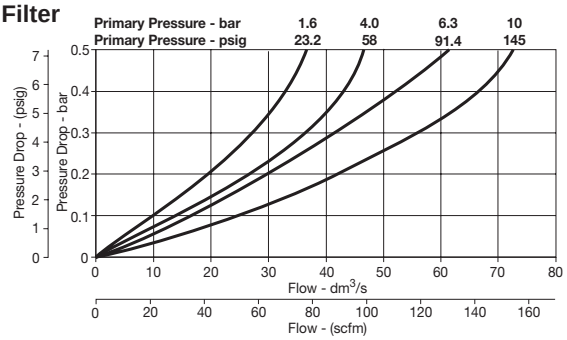

Dimensions

mm (inches)

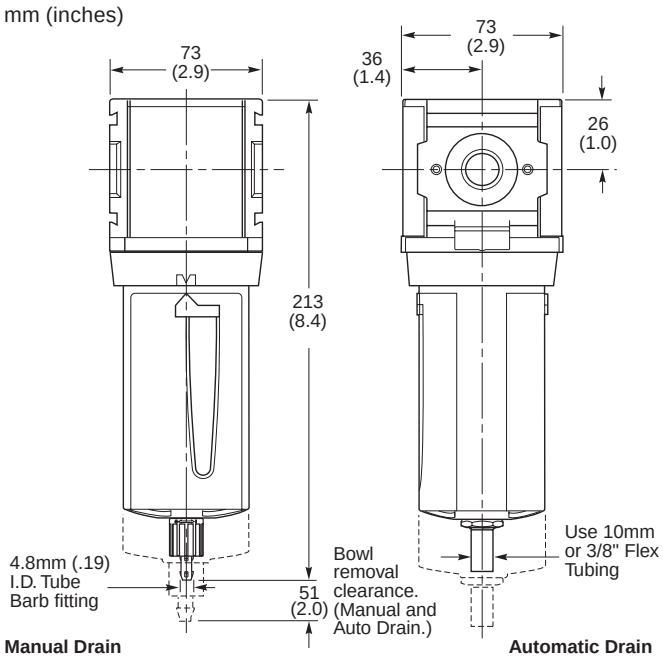

Repair and Service Kits

Plastic bowl / Bowl guard manual drain	**P33KA00BGM**
Metal bowl / Sight gauge manual drain	**P33KA00BSM**
Auto drain	**P32KA00DA**
5µ particle filter element	**P33KA00ESE**
L-Bracket (fits to body)	**P33KA00ML**
T-Bracket (fits to body connector)	**P32KA00MB**
T-Bracket with body connector	**P33KA00MT**
Body connector	**P32KA00CB**
Differential pressure indicator (replacement)	**P32KA00RQ**

Parker Hannifin Corporation
Pneumatic Division
Richland, Michigan
www.parker.com/pneumatics

P31 Mini Coalescing and Adsorber Filters

Features

- Integral 1/4" ports (NPT, BSPP & BSPT)
- Removes liquid aerosols and sub micron particles
- Oil free air for critical applications, such as air gauging, pneumatic instrumentation and control
- Positive bayonet latch to ensure correct & safe fitting
- Adsorbing activated carbon element removes oil vapors and most hydrocarbons

Note: To optimize the life of coalescing element, it is advisable to install a P31F pre-filter with a 5 micron element upstream of the coalescing filter.

To optimize the life of an Adsorber it is advisable to install a P31 Coalescing Filter upstream of the Adsorber. Adsorber element should be replaced approximately every 1000 hours of service.

Ordering Information

P 3 1 F ***** [ ] [ ] [ ] [ ] [ ] **N**

Engr. level
* Will be entered at factory

Thread type	
BSPP	**1**
BSPT	**2**
NPT	**9**

Port size	
1/4	**2**

Element	
0.01µ Element	**C**
1µ Element	**9**
Adsorber	**A**

Bowl type	
Poly bowl with bowl guard	**G**
Metal bowl without sight gauge	**M**

Drain type	
Pulse drain	**B**
Manual drain	**M**

Mounting	
No bracket	**N**

*** Engineering Level will be entered at factory.**

Port size	Description	Order Code†	Flow‡ dm^3/s (scfm)	Max. bar (psig)	Height mm (inches)	Width mm (inches)	Depth mm (inches)
1/4"	Poly bowl - 0.01 micron - Manual drain	**P31F*92CGMN**	2 (4.2)	10 (150)	116.3 (4.58)	40 (1.58)	42.7 (1.68)
1/4'	Poly bowl - 0.01 micron - Pulse drain	**P31F*92CGBN**	2 (4.2)	10 (150)	116.3 (4.58)	40 (1.58)	42.7 (1.68)
1/4"	Metal bowl - 0.01 micron - Manual drain	**P31F*92CMMN**	2 (4.2)	17 (250)	116.3 (4.58)	40 (1.58)	42.7 (1.68)
1/4'	Metal bowl - 0.01 micron - Pulse drain	**P31F*92CMBN**	2 (4.2)	17 (250)	116.3 (4.58)	40 (1.58)	42.7 (1.68)

† **Standard part numbers shown in bold. For other models refer to Ordering Information chart above.**
‡ Flow with 6.3 bar (91.3 psig) inlet pressure and 0.2 (3 psig) pressure drop.

Parker Hannifin Corporation
Pneumatic Division
Richland, Michigan
www.parker.com/pneumatics

Specifications

Flow Capacity		dm^3/s	SCFM
1.0 Micron Coalescing	Energy Efficient Flow*	3.8	(8)
	Maximum Flow**	6	(13)
0.01 Micron Coalescing	Energy Efficient Flow*	2	(4.2)
	Maximum Flow**	3.8	(8)
Activated Carbon Adsorber	Rated Flow*	6	(13)

Operating Temperature	Plastic Bowl	-10°C to 52°C (14°F to 125°F)
	Metal Bowl	-10°C to 65.5°C (14°F to 150°F)
Max. Supply Pressure	Plastic Bowl	10 bar (150 psig)
	Metal Bowl	17 bar (250 psig)
Standard Filtration		1.0 and 0.01 Micron
Adsorber	Max. oil carryover (ppm w/w)	0.003 @ 21°C (70°F)
Useful Retention†		12 cm^3 (0.4 US oz.)
Port Size	BSPP / BSPT / NPT	1/4
Weight		0.11 kg (0.24 lbs)

* Inlet pressure 6.3 bar (91.3 psig), Pressure drop 0.2 bar (3 psig), Saturated Element.

** Inlet pressure 6.3 bar (91.3 psig), Pressure drop 0.4 bar (6 psig), Saturated Element.

† Useful retention refers to volume below the quiet zone baffle.

Materials of Construction

Body		Aluminum
Body Cap		ABS
Bowl	Plastic Bowl	Polycarbonate
	Metal Bowl	Aluminum
Filter Element	1.0 and .01 Micron	Borosilicate Cloth
Adsorber		Activated Carbon
Seals		Nitrile

Flow Charts

P31 - 1.0 micron flow

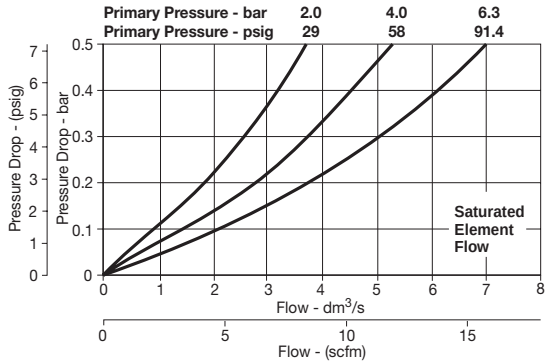

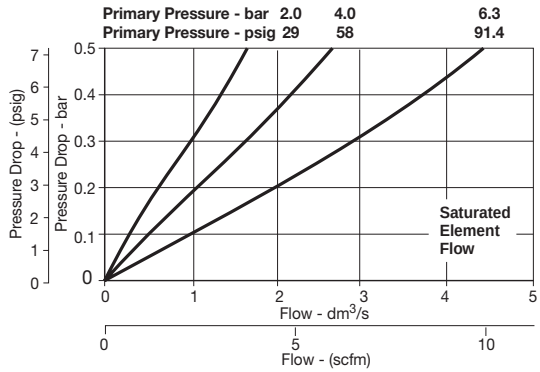

Dimensions

mm (inches)

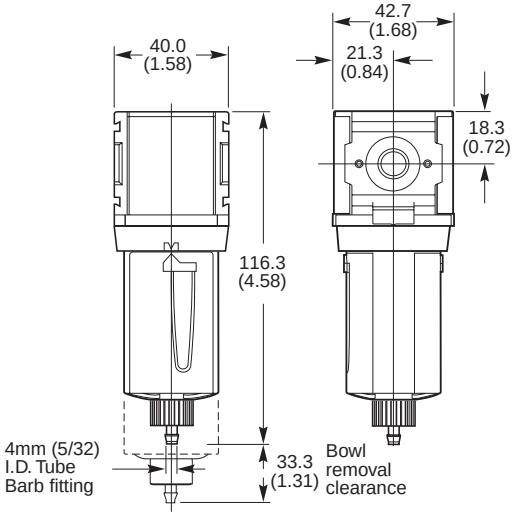

Repair and Service Kits

Plastic bowl / Bowl guard manual drain	**P31KA00BGM**
Metal bowl / w/o sight gauge manual drain	**P31KA00BMM**
Plastic bowl / Bowl guard pulse drain	**P31KA00BGB**
Metal bowl / w/o sight gauge pulse drain	**P31KA00BMB**
1µ coalescing filter element	**P31KA00ES9**
0.01µ coalescing filter element	**P31KA00ESC**
Activated carbon adsorber filter element	**P31KA00ESA**
C-Bracket (fits to body)	**P31KA00MW**
T-Bracket with body connector	**P31KA00MT**
Body connector	**P31KA00CB**

Parker Hannifin Corporation
Pneumatic Division
Richland, Michigan
www.parker.com/pneumatics

P32 Compact Coalescing and Adsorber Filter

Features

- Integral 1/4", 3/8" or 1/2" ports (NPT, BSPP & BSPT)
- Removes liquid aerosols and sub micron particles
- Oil free air for critical applications, such as air gauging, pneumatic instrumentation and control
- Differential Pressure Indicator (DPI) standard on Coalescing Filters
- Positive bayonet latch to ensure correct & safe fitting
- Adsorbing activated carbon element removes oil vapors and most hydrocarbons

Note: To optimize the life of coalescing element, it is advisable to install a P32F pre-filter with a 5 micron element upstream of the coalescing filter.

To optimize the life of an Adsorber it is advisable to install a P32 Coalescing Filter upstream of the Adsorber. Adsorber element should be replaced approximately every 1000 hours of service.

Ordering Information

P 3 2 F ***** [ ] [ ] [ ] [ ] [ ] **N**

Engr. level
* Will be entered at factory

Thread type	
BSPP	**1**
BSPT	**2**
NPT	**9**

Port size	
1/4	**2**
3/8	**3**
1/2	**4**

Element	
0.01µ Element	**C**
0.01µ Element with dpi	**D**
1µ Element	**9**
1µ Element with dpi	**Q**
Adsorber	**A**

Bowl type	
Poly bowl with bowl guard	**G**
Metal bowl without sight gauge	**M**
Metal bowl with sight gauge	**S**

Drain type	
Manual drain	**M**
Auto drain	**A**

Mounting	
No bracket	**N**

*** Engineering Level will be entered at factory.**

Port size	Description	Order Code†	Flow‡ dm^3/s (scfm)	Max. bar (psig)	Height mm (inches)	Width mm (inches)	Depth mm (inches)
1/4"	Poly bowl - 0.01 Micron, Manual drain	**P32F*92DGMN**	11 (23)	10 (150)	209 (8.2)	60 (2.36)	60 (2.36)
1/4"	Poly bowl - 0.01 Micron, Auto drain	**P32F*92DGAN**	11 (23)	10 (150)	203 (8.0)	60 (2.36)	60 (2.36)
1/4"	Metal bowl - 0.01 Micron, Manual drain	**P32F*92DSMN**	11 (23)	17 (250)	209 (8.2)	60 (2.36)	60 (2.36)
1/4"	Metal bowl - 0.01 Micron, Auto drain	**P32F*92DSAN**	11 (23)	17 (250)	203 (8.0)	60 (2.36)	60 (2.36)
3/8"	Poly bowl - 0.01 Micron, Manual drain	**P32F*93DGMN**	11 (23)	10 (150)	209 (8.2)	60 (2.36)	60 (2.36)
3/8"	Poly bowl - 0.01 Micron, Auto drain	**P32F*93DGAN**	11 (23)	10 (150)	203 (8.0)	60 (2.36)	60 (2.36)
3/8"	Metal bowl - 0.01 Micron, Manual drain	**P32F*93DSMN**	11 (23)	17 (250)	209 (8.2)	60 (2.36)	60 (2.36)
3/8'	Metal bowl - 0.01 Micron, Auto drain	**P32F*93DSAN**	11 (23)	17 (250)	203 (8.0)	60 (2.36)	60 (2.36)
1/2"	Poly bowl - 0.01 Micron, Manual drain	**P32F*94DGMN**	11 (23)	10 (150)	209 (8.2)	60 (2.36)	60 (2.36)
1/2"	Poly bowl - 0.01 Micron, Auto drain	**P32F*94DGAN**	11 (23)	10 (150)	203 (8.0)	60 (2.36)	60 (2.36)
1/2"	Metal bowl - 0.01 Micron, Manual drain	**P32F*94DSMN**	11 (23)	17 (250)	209 (8.2)	60 (2.36)	60 (2.36)
1/2"	Metal bowl - 0.01 Micron, Auto drain	**P32F*94DSAN**	11 (23)	17 (250)	203 (8.0)	60 (2.36)	60 (2.36)

† **Standard part numbers shown in bold. For other models refer to Ordering Information chart above.**
‡ Flow with 6.3 bar (91.3 psig) inlet pressure and 0.2 (3 psig) pressure drop.

Parker Hannifin Corporation
Pneumatic Division
Richland, Michigan
www.parker.com/pneumatics

Specifications

Flow Capacity		dm^3/s	SCFM
1.0 Micron Coalescing	Energy Efficient Flow*	17	(36)
	Maximum Flow**	27	(57)
0.01 Micron Coalescing	Energy Efficient Flow*	11	(23)
	Maximum Flow**	28	(38)
Activated Carbon Adsorber	Rated Flow*	27	(57)

Operating Temperature	Plastic Bowl	-25°C to 52°C (-13°F to 125°F)
	Metal Bowl	-25°C to 65.5°C (-13°F to 150°F)
Max. Supply Pressure	Plastic Bowl	10 bar (150 psig)
	Metal Bowl	17 bar (250 psig)
Standard Filtration		1.0 and 0.01 Micron
Adsorber	Max. oil carryover (ppm w/w)	0.003 @ 21°C (70°F)
Useful Retention†		51 cm^3 (1.7 US oz.)
Port Size	BSPP / BSPT / NPT	1/4, 3/8, 1/2
Weight		0.32 kg (0.71 lbs)

* Inlet pressure 6.3 bar (91.3 psig), Pressure drop 0.2 bar (3 psig), Saturated Element.

** Inlet pressure 6.3 bar (91.3 psig), Pressure drop 0.4 bar (6 psig), Saturated Element.

† Useful retention refers to volume below the quiet zone baffle.

Flow Charts

P32 - 1.0 micron flow

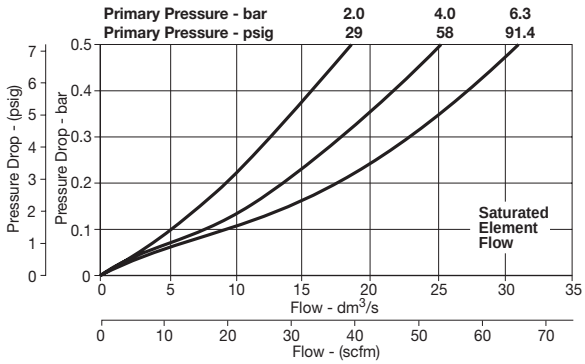

P32 - 0.01 micron flow

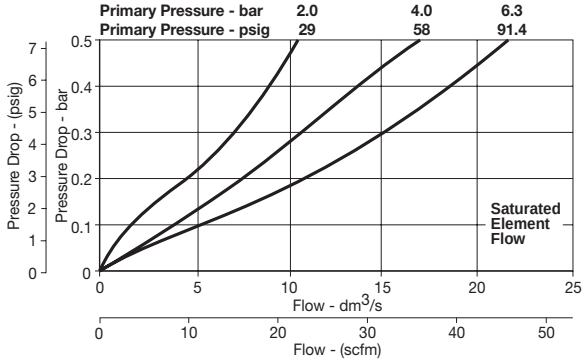

Materials of Construction

Body		Aluminum
Body Cap		ABS
Bowls	Plastic Bowl	Polycarbonate
	Metal Bowl	Aluminum
Filter Element	1.0 and .01 Micron	Borosilicate Cloth
Adsorber		Activated Carbon
Seals		Nitrile
Sight Gauge	Metal Bowl	Polycarbonate

Repair and Service Kits

Plastic bowl / Bowl guard manual drain	**P32KA00BGM**
Metal bowl / Sight gauge manual drain	**P32KA00BSM**
Auto drain	**P32KA00DA**
1µ coalescing filter element	**P32KA00ES9**
0.01µ coalescing filter element	**P32KA00ESC**
Activated carbon adsorber filter element	**P32KA00ESA**
L-Bracket (fits to body)	**P32KA00ML**
T-Bracket (fits to body connector)	**P32KA00MB**
T-Bracket with body connector	**P32KA00MT**
Body connector	**P32KA00CB**
Differential pressure indicator (replacement)	**P32KA00RQ**

Dimensions

mm (inches)

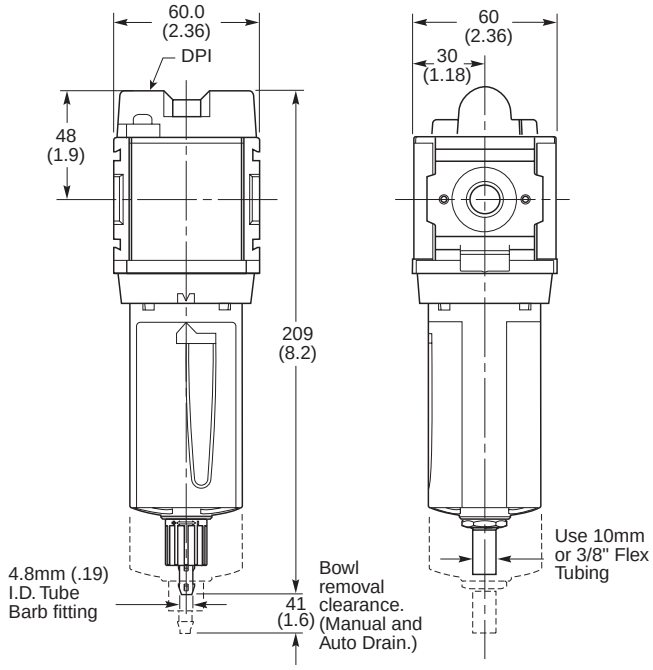

Manual Drain **Automatic Drain**

Parker Hannifin Corporation
Pneumatic Division
Richland, Michigan
www.parker.com/pneumatics

P33 Standard Coalescing and Adsorber Filter

Features

- Integral 1/2" or 3/4" ports (NPT, BSPP & BSPT)
- Removes liquid aerosols and sub micron particles
- Oil free air for critical applications, such as air gauging, pneumatic instrumentation and control
- Differential Pressure Indicator (DPI) standard on Coalescing Filters
- Positive bayonet latch to ensure correct & safe fitting
- Adsorbing activated carbon element removes oil vapors and most hydrocarbons

Note: To optimize the life of coalescing element, it is advisable to install a P32F pre-filter with a 5 micron element upstream of the coalescing filter.

To optimize the life of an Adsorber it is advisable to install a P32 Coalescing Filter upstream of the Adsorber. Adsorber element should be replaced approximately every 1000 hours of service.

Ordering Information

P 3 3 F [*] [ ] [ ] [ ] [ ] [ ] [ ] **N**

Engr. level
* Will be entered at factory

Thread type	
BSPP	**1**
BSPT	**2**
NPT	**9**

Port size	
1/2	**4**
3/4	**6**

Element	
0.01µ Element	**C**
0.01µ Element with dpi	**D**
1µ Element	**9**
1µ Element with dpi	**Q**
Adsorber	**A**

Bowl type	
Poly bowl with bowl guard	**G**
Metal bowl without sight gauge	**M**
Metal bowl with sight gauge	**S**

Drain type	
Manual drain	**M**
Auto drain	**A**

Mounting	
No bracket	**N**

*** Engineering Level will be entered at factory.**

Port size	Description	Order Code†	Flow‡ dm^3/s (scfm)	Max. bar (psig)	Height mm (inches)	Width mm (inches)	Depth mm (inches)
1/2"	Poly bowl - 0.01 Micron, Manual drain	**P33F*94DGMN**	20 (42)	10 (150)	235 (9.3)	73 (2.9)	73 (2.9)
1/2"	Poly bowl - 0.01 Micron, Auto drain	**P33F*94DGAN**	20 (42)	10 (150)	229 (9.0)	73 (2.9)	73 (2.9)
1/2"	Metal bowl - 0.01 Micron, Manual drain	**P33F*94DSMN**	20 (42)	17 (250)	235 (9.3)	73 (2.9)	73 (2.9)
1/2"	Metal bowl - 0.01 Micron, Auto drain	**P33F*94DSAN**	20 (42)	17 (250)	229 (9.0)	73 (2.9)	73 (2.9)
3/4"	Poly bowl - 0.01 Micron, Manual drain	**P33F*96DGMN**	20 (42)	10 (150)	235 (9.3)	73 (2.9)	73 (2.9)
3/4"	Poly bowl - 0.01 Micron, Auto drain	**P33F*96DGAN**	20 (42)	10 (150)	229 (9.0)	73 (2.9)	73 (2.9)
3/4"	Metal bowl - 0.01 Micron, Manual drain	**P33F*96DSMN**	20 (42)	17 (250)	235 (9.3)	73 (2.9)	73 (2.9)
3/4"	Metal bowl - 0.01 Micron, Auto drain	**P33F*96DSAN**	20 (42)	17 (250)	229 (9.0)	73 (2.9)	73 (2.9)

† **Standard part numbers shown in bold. For other models refer to Ordering Information chart above.**
‡ Flow with 6.3 bar (91.3 psig) inlet pressure and 0.2 (3 psig) pressure drop.

Parker Hannifin Corporation
Pneumatic Division
Richland, Michigan
www.parker.com/pneumatics

Specifications

Flow Capacity		dm^3/s	SCFM
1.0 Micron Coalescing	Energy Efficient Flow*	32	(68)
	Maximum Flow**	44	(93)
0.01 Micron Coalescing	Energy Efficient Flow*	20	(42)
	Maximum Flow**	34	(72)
Activated Carbon Adsorber	Rated Flow*	44	(93)

Operating Temperature	Plastic Bowl	-25°C to 52°C (-13°F to 125°F)
	Metal Bowl	-25°C to 65.5°C (-13°F to 150°F)
Max. Supply Pressure	Plastic Bowl	10 bar (150 psig)
	Metal Bowl	17 bar (250 psig)
Standard Filtration		1.0 and 0.01 Micron
Adsorber	Max. oil carryover (ppm w/w)	0.003 @ 21°C (70°F)
Useful Retention†		85 cm^3 (2.8 US oz.)
Port Size	BSPP / BSPT / NPT	1/2, 3/4
Weight		0.50 kg (1.10 lbs)

* Inlet pressure 6.3 bar (91.3 psig), Pressure drop 0.2 bar (3 psig), Saturated Element.

** Inlet pressure 6.3 bar (91.3 psig), Pressure drop 0.4 bar (6 psig), Saturated Element.

† Useful retention refers to volume below the quiet zone baffle.

Flow Charts

P33 - 1.0 micron flow

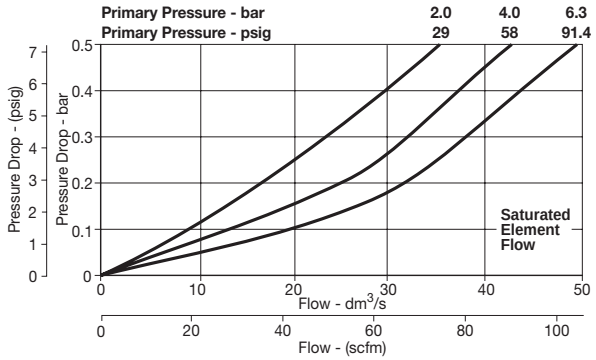

P33 - 0.01 micron flow

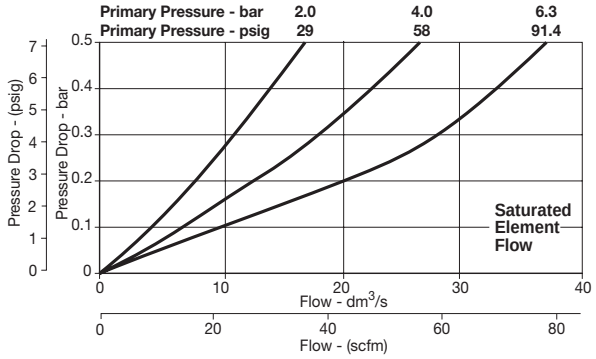

Dimensions

mm (inches)

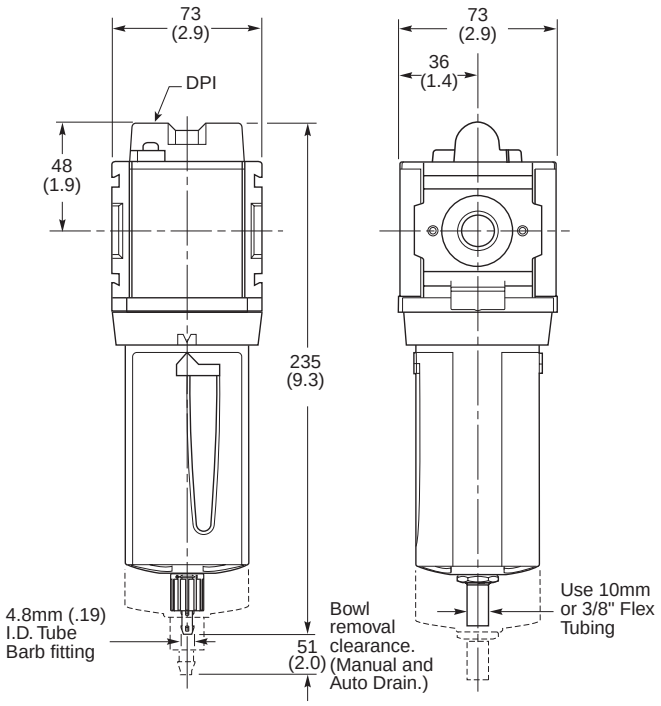

Manual Drain **Automatic Drain**

Materials of Construction

Body		Aluminum
Body Cap		ABS
Bowls	Plastic Bowl	Polycarbonate
	Metal Bowl	Zinc
Filter Element	1.0 and .01 Micron	Borosilicate Cloth
Adsorber		Activated Carbon
Seals		Nitrile
Sight Gauge	Metal Bowl	Polycarbonate

Repair and Service Kits

Plastic bowl / Bowl guard manual drain	**P33KA00BGM**
Metal bowl / Sight gauge manual drain	**P33KA00BSM**
Auto drain	**P32KA00DA**
1µ coalescing filter element	**P33KA00ES9**
0.01µ coalescing filter element	**P33KA00ESC**
Activated carbon adsorber filter element	**P33KA00ESA**
L-Bracket (fits to body)	**P33KA00ML**
T-Bracket (fits to body connector)	**P32KA00MB**
T-Bracket with body connector	**P32KA00MT**
Body connector	**P32KA00CB**
Differential pressure indicator (replacement)	**P32KA00RQ**

Parker Hannifin Corporation
Pneumatic Division
Richland, Michigan
www.parker.com/pneumatics

P31 Mini Regulator

Symbols

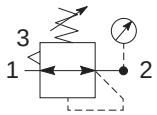

Self relieving regulator with gauge

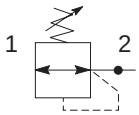

Non relieving regulator

Features

- Integral 1/4" ports (NPT, BSPP & BSPT)
- Robust but lightweight aluminum construction
- Secondary pressure ranges 0-2 bar (0-30 psig), 0-4 bar, (0-60 psig), 0-8 bar (0-125 psig)
- Secondary aspiration plus balanced poppet provides quick response and accurate pressure regulation.
- Relieving & Non-relieving types
- Non-rising knob

Ordering Information

P 3 1 R [*] [ ] [ ] [ ] **N** [ ] **P**

Engr. level
* Will be entered at factory

Thread type	
BSPP	**1**
BSPT	**2**
NPT	**9**

Port size	
1/4	**2**

Relief	
Relieving	**B**
Non relieving	**N**
Reverse flow / relieving	**R**

Adjustment range	
With square gauge	
psig	**bar**
30* = **1**	2* = **V**
60 = **3**	4 = **S**
125 = **5**	8 = **T**
Without gauge†	
psig	**bar**
30 = **Y**	2 = **Y**
60 = **L**	4 = **L**
125 = **N**	8 = **N**

Mounting	
Plastic panel mount nut	**P**

* Unit comes with 0-4 bar or 0-60 psig gauge respectively.
† Order round gauges separately - see next page.

*** Engineering Level will be entered at factory.**

Port size	Description	Order Code†	Flow‡ dm^3/s (scfm)	Max. bar (psig)	Height mm (inches)	Width mm (inches)	Depth mm (inches)
1/4"	8 bar (125 psig) relieving	**P31R*92BNNP**	30 (64)	20 (300)	100.1 (3.94)	40 (1.58)	40 (1.58)
1/4"	8 bar (125 psig) + gauge	**P31R*92BN5P**	30 (64)	20 (300)	100.1 (3.94)	40 (1.58)	64.3 (2.53)

† **Standard part numbers shown in bold. For other models refer to Ordering Information chart above.**
‡ Flow with 10 bar (145 psig) inlet pressure, 6.3 bar (91.3) psig) set pressure and 1 bar (14.5 psig) pressure drop.

Parker Hannifin Corporation
Pneumatic Division
Richland, Michigan
www.parker.com/pneumatics

Specifications

Flow Capacity*	1/4	30 dm^3/s (64 scfm)
Operating Temperature		-20°C to 65.5°C (-4°F to 150°F)
Max. Supply Pressure		20 bar (300 psig)
Adjusting Range Pressure		0-2 bar (30 psig) 0-4 bar (60 psig) 0-8 bar (125 psig)
Port Size	BSPP / BSPT / NPT	1/4
Gauge Port (2 ea.)**	BSPP / BSPT / NPT	1/8
Weight		0.17 kg (0.37 lbs)

* Inlet pressure 10 bar (145 psig). Secondary pressure 6.3 bar (91.3 psig).
** Non-gauge option only.

Materials of Construction

Body	Aluminum
Adjustment Knob	Acetal
Body Cap	ABS
Bonnet	PBT
Diaphragm Assembly	Brass / Nitrile
Bottom Plug	33% Glass-Filled Nylon
Valve Assembly	Brass / Nitrile
Springs	Steel
Seals	Nitrile
Panel Nut	Acetal

Dimensions

mm (inches)

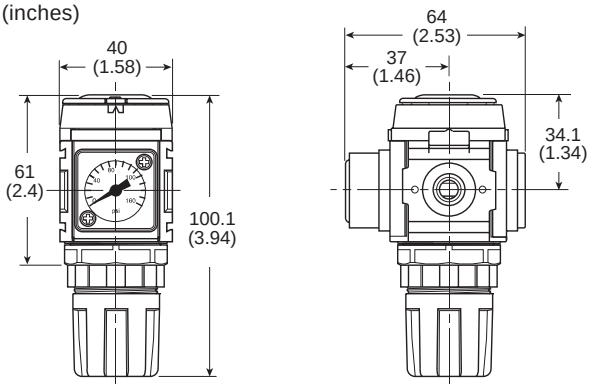

NOTE: 31.7 mm (1.25 in.) hole required for panel nut mounting.

⚠ WARNING

Product rupture can cause serious injury.
Do not connect regulator to bottled gas.
Do not exceed Maximum primary pressure rating.

CAUTION:

REGULATOR PRESSURE ADJUSTMENT – The working range of knob adjustment is designed to permit outlet pressures within their full range. Pressure adjustment beyond this range is also possible because the knob is not a limiting device. This is a common characteristic of most industrial regulators, and limiting devices may be obtained only by special design. For best performance, regulated pressure should always be set by increasing the pressure up to the desired setting.

Flow Charts

1/4 Regulator

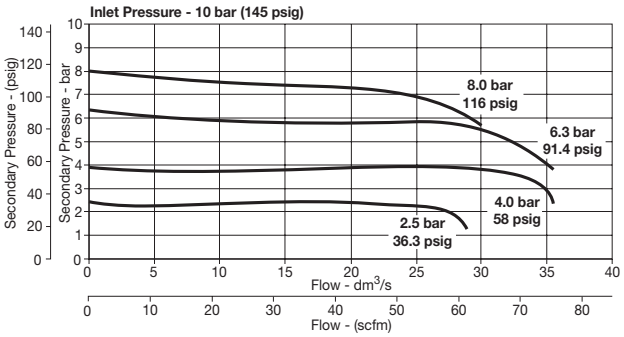

Repair and Service Kits

Regulator repair kit - Relieving	**P31KA00RC**
Regulator repair kit - Non-relieving	**P31KA00RH**
Panel mount nut - Aluminum	**P31KA00MM**
Panel mount nut - Plastic	**P31KA00MP**
Angle Bracket (uses panel mount threads)	**P31KA00MR**
C-Bracket (fits to body)	**P31KA00MW**
T-Bracket with body connector	**P31KA00MT**
Body connector	**P31KA00CB**

Gauges

Square flush mount gauge

0-4 bar	**K4511SCR04B**
0-10 bar	**K4511SCR11B**
0-60 psig	**K4511SCR060**
0-150 psig	**K4511SCR150**

1.00" Round 1/8" center back mount

0-60 psig / 0-4 bar	**K4510N18060**
0-160 psig / 0-11 bar	**K4510N18160**

40mm Round 1/8" center back mount

0-30 psig / 0-2 bar	**K4515N18030**
0-60 psig / 0-4 bar	**K4515N18060**
0-160 psig / 0-11 bar	**K4515N18160**

For best performance, regulated pressure should always be set by increasing the pressure up to the desired setting.

Parker Hannifin Corporation
Pneumatic Division
Richland, Michigan
www.parker.com/pneumatics

P31 Mini Common - P1 Regulator

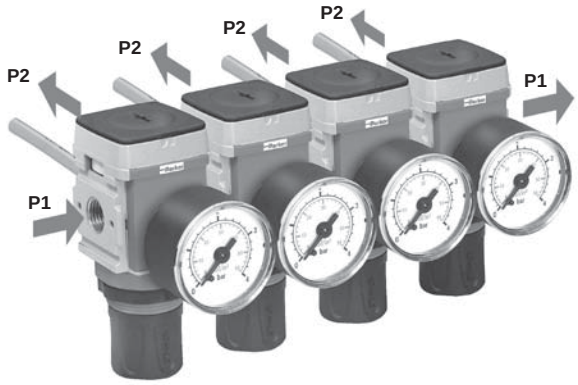

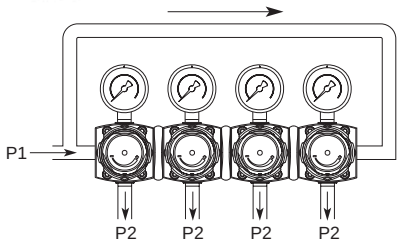

Symbols

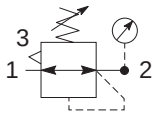

Self relieving regulator with gauge

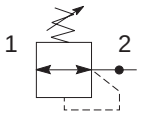

Non relieving regulator

Features

- Manifold style regulator with line pressure on both sides.
- Pressure output is at front or rear.
- Integral 1/4" ports (NPT, BSPP & BSPT)
- Robust construction
- Secondary pressure ranges 0-2 bar (0-30 psig), 0-4 bar, (0-60 psig), 0-8 bar (0-125 psig)
- Secondary aspiration plus balanced poppet provides quick response and accurate pressure regulation
- Relieving & Non-relieving types
- Non-rising knob

Ordering Information

P 3 1 H [*] [ ] [ ] [ ] [N] [ ] [P]

Engr. level
* Will be entered at factory

Thread type	
BSPP	**1**
BSPT	**2**
NPT	**9**

Port size	
1/4	**2**

Relief	
Relieving	**B**
Non relieving	**N**

Adjustment range	
Without gauge	
2 bar; 30 psig	**Y**
4 bar; 60 psig	**L**
8 bar; 125 psig	**N**

Mounting	
Plastic panel mount nut	**P**

*** Engineering Level will be entered at factory.**

Order gauges separately - see next page.

Port size	Description	Order Code†	Flow‡ dm^3/s (scfm)	Max. bar (psig)	Height mm (inches)	Width mm (inches)	Depth mm (inches)
1/4"	8 bar (125 psig) Relieving	**P31H*92BNNP**	18 (38)	20 (300)	100.1 (3.94)	40 (1.58)	40 (1.58)

† **Standard part numbers shown in bold. For other models refer to Ordering Information chart above.**
‡ Flow with 10 bar (145 psig) inlet pressure, 6.3 bar (91.3) psig) set pressure and 1 bar (14.5 psig) pressure drop.

Parker Hannifin Corporation
Pneumatic Division
Richland, Michigan
www.parker.com/pneumatics

Specifications

Flow Capacity*	1/4	18 dm^3/s (38 scfm)
Operating Temperature		-20°C to 65.5°C (-4°F to 150°F)
Max. Supply Pressure		20 bar (300 psig)
Adjusting Range Pressure		0-2 bar (30 psig) 0-4 bar (60 psig) 0-8 bar (125 psig)
P1 Port Size (Inlet / Outlet)	BSPP / BSPT / NPT	1/4
P2 Regulated Ports (2 ea.)	BSPP / BSPT / NPT	1/8
Weight		0.30 kg (0.66 lbs)

* Inlet pressure 10 bar (145 psig). Secondary pressure 6.3 bar (91.3 psig).

Materials of Construction

Body	Zinc
Adjustment Knob	Acetal
Body Cap	ABS
Bonnet	33% Glass-filled PBT
Diaphragm Assembly	Brass / Nitrile
Bottom Plug	33% Glass-filled Nylon
Valve Assembly	Brass / Nitrile

Flow Charts

1/4 Common Regulator

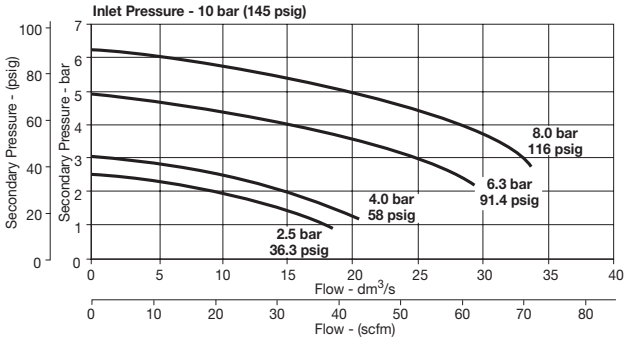

Dimensions

mm (inches)

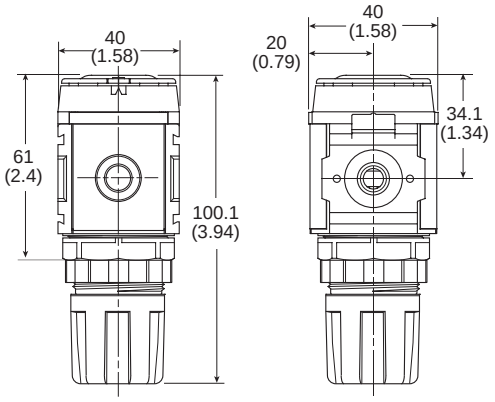

NOTE: 31.7 mm (1.25 in.) hole required for panel nut mounting.

⚠ WARNING

Product rupture can cause serious injury.
Do not connect regulator to bottled gas.
Do not exceed Maximum primary pressure rating.

CAUTION:

REGULATOR PRESSURE ADJUSTMENT – The working range of knob adjustment is designed to permit outlet pressures within their full range. Pressure adjustment beyond this range is also possible because the knob is not a limiting device. This is a common characteristic of most industrial regulators, and limiting devices may be obtained only by special design. For best performance, regulated pressure should always be set by increasing the pressure up to the desired setting.

Repair and Service Kits

Regulator repair kit - Relieving	**P31KA00RC**
Regulator repair kit - Non-relieving	**P31KA00RH**
Panel mount nut - Aluminum	**P31KA00MM**
Panel mount nut - Plastic	**P31KA00MP**
Angle Bracket (uses panel mount threads)	**P31KA00MR**
T-Bracket with body connector	**P31KA00MT**
T-Bracket	**P31KA00MB**
Body connector	**P31KA00CB**

Gauges

1.00" Round 1/8" center back mount

0-60 psig / 0-4 bar	**K4510N18060**
0-160 psig / 0-11 bar	**K4510N18160**

For best performance, regulated pressure should always be set by increasing the pressure up to the desired setting.

Parker Hannifin Corporation
Pneumatic Division
Richland, Michigan
www.parker.com/pneumatics

P32 Compact Regulator

Symbols

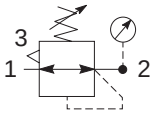

Self relieving regulator with gauge

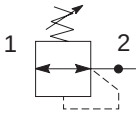

Non relieving regulator

Features

- Integral 1/4", 3/8" or 1/2" ports (NPT, BSPP & BSPT)
- Robust but lightweight aluminum construction
- Secondary pressure ranges 0-2 bar (0-30 psig), 0-4 bar, (0-60 psig), 0-8 bar (0-125 psig), 0-17 bar (0-250 psig)
- Secondary aspiration plus balanced poppet provides quick response and accurate pressure regulation
- Relieving & Non-relieving types
- Non-rising knob

Ordering Information

P 3 2 R [*] [ ] [ ] [ ] **N** [ ] **P**

Engr. level
* Will be entered at factory

Thread type	
BSPP	**1**
BSPT	**2**
NPT	**9**

Port size	
1/4	**2**
3/8	**3**
1/2	**4**

Relief	
Relieving	**B**
Non relieving	**N**
Reverse flow / relieving	**R**

Adjustment range	
With round gauge	
2 bar; 30 psig; 0.2 MPa	**Z**
4 bar; 60 psig; 0.4 MPa	**M**
8 bar; 125 psig; 0.8 MPa	**G**
17 bar; 250 psig; 1.7 MPa	**J**
Without gauge	
2 bar; 30 psig; 0.2 MPa	**Y**
4 bar; 60 psig; 0.4 MPa	**L**
8 bar; 125 psig; 0.8 MPa	**N**
17 bar; 250 psig; 1.7 MPa	**H**

Mounting	
Plastic panel mount nut	**P**

*** Engineering Level will be entered at factory.**

Port size	Description	Order Code†	Flow‡ dm^3/s (scfm)	Max. bar (psig)	Height mm (inches)	Width mm (inches)	Depth mm (inches)
1/4"	8 bar (125 psig) Relieving	**P32R*92BNNP**	41 (81)	20 (300)	136 (5.4)	60 (2.36)	60 (2.36)
1/4"	8 bar (125 psig) Relieving + Gauge	**P32R*92BNGP**	41 (81)	20 (300)	136 (5.4)	60 (2.36)	60 (2.36)
3/8"	8 bar (125 psig) Relieving	**P32R*93BNNP**	65 (138)	20 (300)	136 (5.4)	60 (2.36)	60 (2.36)
3/8"	8 bar (125 psig) Relieving + Gauge	**P32R*93BNGP**	65 (138)	20 (300)	136 (5.4)	60 (2.36)	60 (2.36)
1/2"	8 bar (125 psig) Relieving	**P32R*94BNNP**	67 (142)	20 (300)	136 (5.4)	60 (2.36)	60 (2.36)
1/2"	8 bar (125 psig) Relieving + Gauge	**P32R*94BNGP**	67 (142)	20 (300)	136 (5.4)	60 (2.36)	60 (2.36)

† **Standard part numbers shown in bold. For other models refer to Ordering Information chart above.**
‡ Flow with 10 bar (145 psig) inlet pressure, 6.3 bar (91.3) psig) set pressure and 1 bar (14.5 psig) pressure drop.

Parker Hannifin Corporation
Pneumatic Division
Richland, Michigan
www.parker.com/pneumatics

Specifications

Flow Capacity*	1/4	41 dm^3/s (81 scfm)
	3/8	65 dm^3/s (138 scfm)
	1/2	67 dm^3/s (142 scfm)
Operating Temperature		-25°C to 65.5°C (-13°F to 150°F)
Max. Supply Pressure		20 bar (300 psig)
Adjusting Range Pressure		0-2 bar (30 psig) 0-4 bar (60 psig) 0-8 bar (125 psig) 0-17 bar (250 psig)
Port Size	BSPP / BSPT / NPT	1/4, 3/8, 1/2
Gauge Port (2 ea.)	BSPP / BSPT / NPT	1/4
Weight		0.41 kg (0.90 lbs)

* Inlet pressure 10 bar (145 psig). Secondary pressure 6.3 bar (91.3 psig).

Materials of Construction

Body		Aluminum
Adjustment Knob		Acetal
Body Cap		ABS
Bonnet		33% Glass-filled nylon
Diaphragm Assembly		Nitrile / Zinc
Bottom Plug		33% Glass-filled Nylon
Valve Assembly		Brass / Nitrile
Springs	Main Regulating Valve	Steel S.S.
Seals		Nitrile
Panel Nut		Acetal

Dimensions

mm (inches)

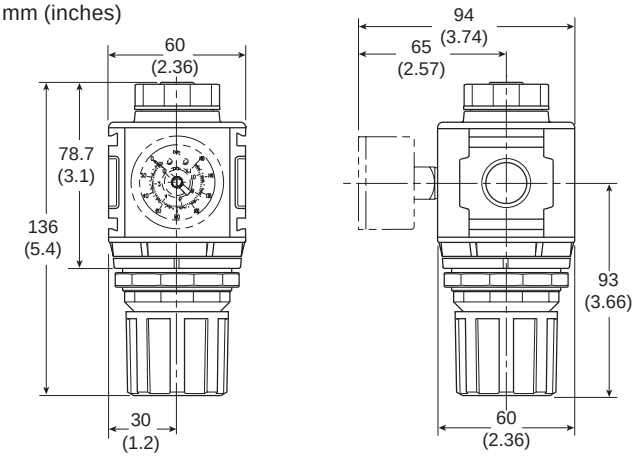

NOTE: 51 mm (2.00 in.) hole required for panel nut mounting.

⚠ WARNING

Product rupture can cause serious injury.
Do not connect regulator to bottled gas.
Do not exceed Maximum primary pressure rating.

CAUTION:

REGULATOR PRESSURE ADJUSTMENT – The working range of knob adjustment is designed to permit outlet pressures within their full range. Pressure adjustment beyond this range is also possible because the knob is not a limiting device. This is a common characteristic of most industrial regulators, and limiting devices may be obtained only by special design. For best performance, regulated pressure should always be set by increasing the pressure up to the desired setting.

Flow Charts

1/4 Regulator

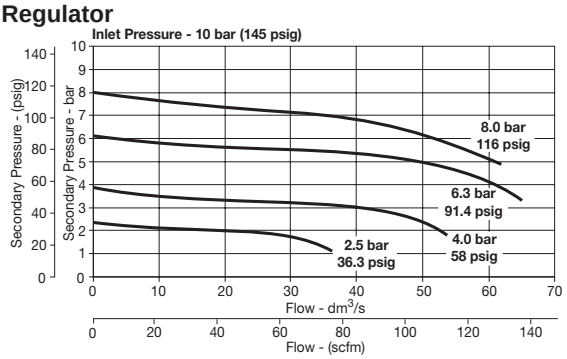

3/8 Regulator

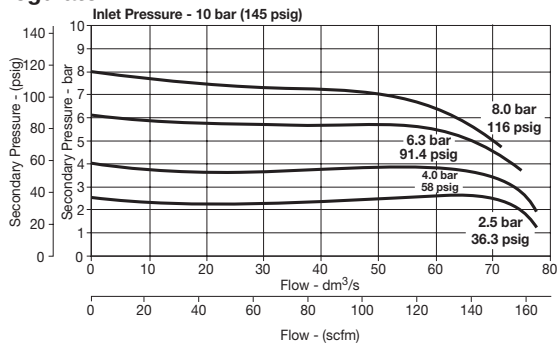

1/2 Regulator

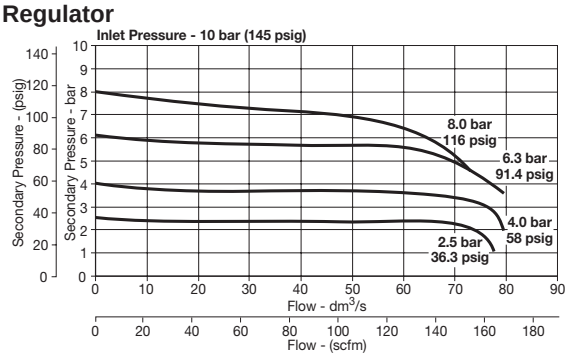

Repair and Service Kits

Regulator repair kit - Relieving	**P32KA00RC**
Regulator repair kit - Non-relieving	**P32KA00RH**
Panel mount nut - Aluminum	**P32KA00MM**
Panel mount nut - Plastic	**P32KA00MP**
Angle Bracket (uses panel mount threads)	**P32KA00MR**
T-Bracket with body connector	**P32KA00MT**
Body connector	**P32KA00CB**

Gauges

50mm (2") Round 1/4" center back mount

0-30 psig / 0-2 bar / 0-0.2 MPa	**K4520N14030**
0-60 psig / 0-4 bar / 0-0.4 MPa	**K4520N14060**
0-160 psig / 0-11 bar / 0-1.1 MPa	**K4520N14160**
0-300 psig / 0-20 bar / 0-2 MPa	**K4520N14300**

For best performance, regulated pressure should always be set by increasing the pressure up to the desired setting.

Parker Hannifin Corporation
Pneumatic Division
Richland, Michigan
www.parker.com/pneumatics

P32 Compact Common P1 Regulator

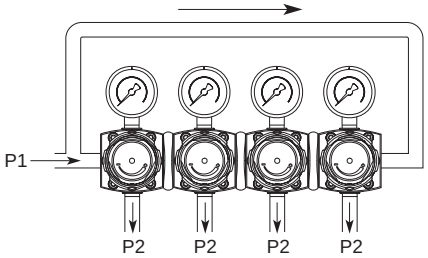

Symbols

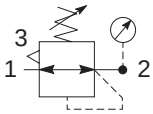

Self relieving regulator with gauge

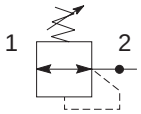

Non relieving regulator

Features

- Manifold style regulator with line pressure on both sides.
- Pressure output is at front or rear.
- Integral 1/4", 3/8" or 1/2" ports (NPT, BSPP & BSPT)
- Robust construction
- Secondary pressure ranges 0-2 bar (0-30 psig), 0-4 bar, (0-60 psig), 0-8 bar (0-125 psig), 0-17 bar (0-250 psig)
- Secondary aspiration plus balanced poppet provides quick response and accurate pressure regulation
- Relieving & Non-relieving types
- Non-rising knob

Ordering Information

P 3 2 H ***** [ ] [ ] [ ] **N** [ ] **P**

Engr. level
* Will be entered at factory

Thread type	
BSPP	**1**
BSPT	**2**
NPT	**9**

Port size	
1/4	**2**
3/8	**3**
1/2	**4**

Relief	
Relieving	**B**
Non relieving	**N**

Adjustment range	
Without gauge	
2 bar; 30 psig; 0.2 MPa	**Y**
4 bar; 60 psig; 0.4 MPa	**L**
8 bar; 125 psig; 0.8 MPa	**N**
17 bar; 250 psig; 1.7 MPa	**H**

Order gauges separately- see next page.

Mounting	
Plastic panel mount nut	**P**

*** Engineering Level will be entered at factory.**

Port size	Description	Order Code†	Flow‡ dm^3/s (scfm)	Max. bar (psig)	Height mm (inches)	Width mm (inches)	Depth mm (inches)
1/4"	8 bar (125 psig) Relieving	**P32H*92BNNP**	28 (59)	20 (300)	136 (5.4)	60 (2.36)	60 (2.36)
3/8"	8 bar (125 psig) Relieving	**P32H*93BNNP**	28 (59)	20 (300)	136 (5.4)	60 (2.36)	60 (2.36)
1/2"	8 bar (125 psig) Relieving	**P32H*94BNNP**	28 (59)	20 (300)	136 (5.4)	60 (2.36)	60 (2.36)

† **Standard part numbers shown in bold. For other models refer to Ordering Information chart above.**
‡ Flow with 10 bar (145 psig) inlet pressure, 6.3 bar (91.3) psig) set pressure and 1 bar (14.5 psig) pressure drop.

Parker Hannifin Corporation
Pneumatic Division
Richland, Michigan
www.parker.com/pneumatics

Specifications

Flow Capacity*	1/4	28 dm^3/s (59 scfm)
	3/8	28 dm^3/s (59 scfm)
	1/2	28 dm^3/s (59 scfm)
Operating Temperature		-25°C to 65.5°C (-13°F to 150°F)
Max. Supply Pressure		20 bar (300 psig)
Adjusting Range Pressure		0-2 bar (30 psig) 0-4 bar (60 psig) 0-8 bar (125 psig) 0-17 bar (250 psig)
Port Size	BSPP / BSPT / NPT	1/4, 3/8, 1/2
Gauge Port (2 ea.)	BSPP / BSPT / NPT	1/4
Weight		0.50 kg (1.10 lbs)

* Inlet pressure 10 bar (145 psig). Secondary pressure 6.3 bar (91.3 psig).

Materials of Construction

Body		Zinc
Adjustment Knob		Acetal
Body Cap		ABS
Bonnet		33% Glass-filled nylon
Diaphragm Assembly		Nitrile / Zinc
Bottom Plug		33% Glass-filled Nylon
Valve Assembly		Brass / Nitrile
Springs	Main Regulating Valve	Steel S.S.
Seals		Nitrile
Panel Nut		Acetal

Dimensions

mm (inches)

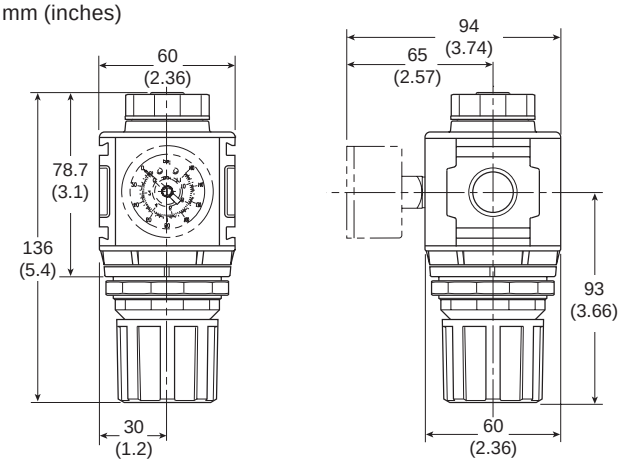

NOTE: 51 mm (2.00 in.) hole required for panel nut mounting.

⚠ WARNING

Product rupture can cause serious injury.
Do not connect regulator to bottled gas.
Do not exceed Maximum primary pressure rating.

CAUTION:

REGULATOR PRESSURE ADJUSTMENT – The working range of knob adjustment is designed to permit outlet pressures within their full range. Pressure adjustment beyond this range is also possible because the knob is not a limiting device. This is a common characteristic of most industrial regulators, and limiting devices may be obtained only by special design. For best performance, regulated pressure should always be set by increasing the pressure up to the desired setting.

Flow Charts

P32 Common Port Regulator

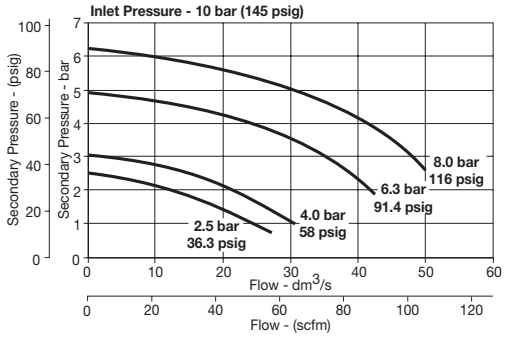

Repair and Service Kits

Regulator repair kit - Relieving	**P32KA00RC**
Regulator repair kit - Non-relieving	**P32KA00RH**
Panel mount nut - Aluminum	**P32KA00MM**
Panel mount nut - Plastic	**P32KA00MP**
Angle Bracket (uses panel mount threads)	**P32KA00MR**
T-Bracket with body connector	**P32KA00MT**
T-Bracket	**P32KA00MB**
Body connector	**P32KA00CB**

Gauges

50mm (2") Round 1/4" center back mount

0-30 psig / 0-2 bar / 0-0.2 MPa	**K4520N14030**
0-60 psig / 0-4 bar / 0-0.4 MPa	**K4520N14060**
0-160 psig / 0-11 bar / 0-1.1 MPa	**K4520N14160**
0-300 psig / 0-20 bar / 0-2 MPa	**K4520N14300**

For best performance, regulated pressure should always be set by increasing the pressure up to the desired setting.

Parker Hannifin Corporation
Pneumatic Division
Richland, Michigan
www.parker.com/pneumatics

P33 Standard Regulator

Symbols

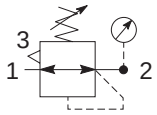

Self relieving regulator with gauge

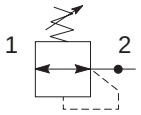

Non relieving regulator

Features

- Integral 1/2" or 3/4" ports (NPT, BSPP & BSPT)
- Robust but lightweight aluminum construction
- Secondary pressure ranges 0-2 bar (0-30 psig), 0-4 bar, (0-60 psig), 0-8 bar (0-125 psig), 0-17 bar (0-250 psig)
- Secondary aspiration plus balanced poppet provides quick response and accurate pressure regulation
- Relieving & Non-relieving types
- Non-rising knob

Ordering Information

P 3 3 R [*] [ ] [ ] [ ] [N] [ ] [P]

Engr. level
* Will be entered at factory

Thread type	
BSPP	**1**
BSPT	**2**
NPT	**9**

Port size	
1/2	**4**
3/4	**6**

Relief	
Relieving	**B**
Non relieving	**N**
Reverse flow / relieving	**R**

Adjustment range	
With round gauge	
2 bar; 30 psig; 0.2 MPa	**Z**
4 bar; 60 psig; 0.4 MPa	**M**
8 bar; 125 psig; 0.8 MPa	**G**
17 bar; 250 psig; 1.7 MPa	**J**
Without gauge	
2 bar; 30 psig; 0.2 MPa	**Y**
4 bar; 60 psig; 0.4 MPa	**L**
8 bar; 125 psig; 0.8 MPa	**N**
17 bar; 250 psig; 1.7 MPa	**H**

Mounting	
Plastic panel mount nut	**P**

*** Engineering Level will be entered at factory.**

Port size	Description	Order Code†	Flow‡ dm^3/s (scfm)	Max. bar (psig)	Height mm (inches)	Width mm (inches)	Depth mm (inches)
1/2"	8 bar (125 psig) Relieving	**P33R*94BNNP**	100 (212)	20 (300)	149 (5.9)	73 (2.9)	73 (2.9)
1/2"	8 bar (125 psig) Relieving + Gauge	**P33R*94BNGP**	100 (212)	20 (300)	149 (5.9)	73 (2.9)	73 (2.9)
3/4"	8 bar (125 psig) Relieving	**P33R*96BNNP**	100 (212)	20 (300)	149 (5.9)	73 (2.9)	73 (2.9)
3/4"	8 bar (125 psig) Relieving + Gauge	**P33R*96BNGP**	100 (212)	20 (300)	149 (5.9)	73 (2.9)	73 (2.9)

† **Standard part numbers shown in bold. For other models refer to Ordering Information chart above.**
‡ Flow with 10 bar (145 psig) inlet pressure, 6.3 bar (91.3) psig) set pressure and 1 bar (14.5 psig) pressure drop.

Parker Hannifin Corporation
Pneumatic Division
Richland, Michigan
www.parker.com/pneumatics

Specifications

Flow Capacity*	1/2	100 dm^3/s (212 scfm)
	3/4	100 dm^3/s (212 scfm)
Operating Temperature		-25°C to 65.5°C (-13°F to 150°F)
Max. Supply Pressure		20 bar (300 psig)
Adjusting Range Pressure		0-2 bar (30 psig) 0-4 bar (60 psig) 0-8 bar (125 psig) 0-17 bar (250 psig)
Port Size	BSPP / BSPT / NPT	1/2, 3/4
Gauge Port (2 ea.)	BSPP / BSPT / NPT	1/4
Weight		0.62 kg (1.37 lbs)

* Inlet pressure 10 bar (145 psig). Secondary pressure 6.3 bar (91.3 psig).

Materials of Construction

Body		Aluminum
Adjustment Knob		Acetal
Body Cap		ABS
Bonnet		33% Glass-filled Nylon
Diaphragm Assembly		Nitrile / Zinc
Valve Assembly		Brass / Nitrile / Acetal
Springs	Main Regulating Valve	Steel S.S.
Seals		Nitrile
Panel Nut		Acetal

Dimensions

mm (inches)

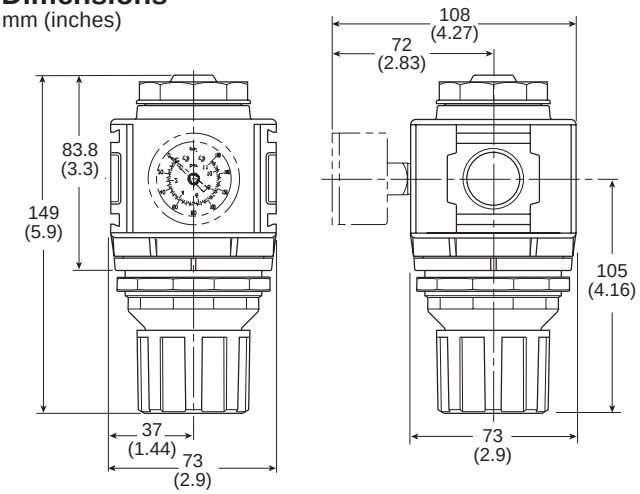

NOTE: 61 mm (2.40 in.) hole required for panel nut mounting.

⚠ WARNING

Product rupture can cause serious injury.
Do not connect regulator to bottled gas.
Do not exceed Maximum primary pressure rating.

CAUTION:

REGULATOR PRESSURE ADJUSTMENT – The working range of knob adjustment is designed to permit outlet pressures within their full range. Pressure adjustment beyond this range is also possible because the knob is not a limiting device. This is a common characteristic of most industrial regulators, and limiting devices may be obtained only by special design. For best performance, regulated pressure should always be set by increasing the pressure up to the desired setting.

Flow Charts

1/2 Regulator

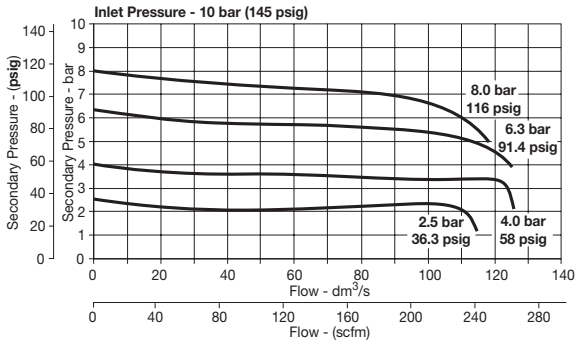

3/4 Regulator

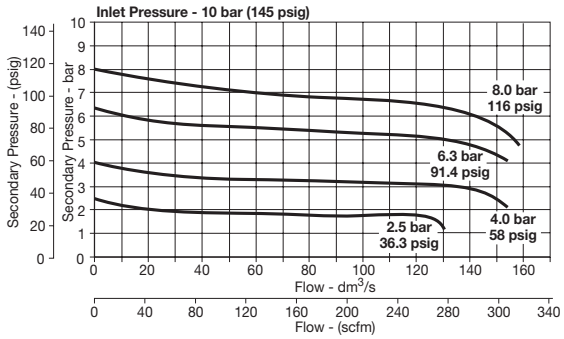

Repair and Service Kits

Regulator repair kit - Relieving	**P33KA00RC**
Regulator repair kit - Non-relieving	**P33KA00RH**
Panel mount nut - Aluminum	**P33KA00MM**
Panel mount nut - Plastic	**P33KA00MP**
Angle Bracket (uses panel mount threads)	**P33KA00MR**
T-Bracket with body connector	**P32KA00MT**
T-Bracket	**P32KA00MB**
Body connector	**P32KA00CB**

Gauges

50mm (2") Round 1/4" center back mount

0-30 psig / 0-2 bar / 0-0.2 MPa	**K4520N14030**
0-60 psig / 0-4 bar / 0-0.4 MPa	**K4520N14060**
0-160 psig / 0-11 bar / 0-1.1 MPa	**K4520N14160**
0-300 psig / 0-20 bar / 0-2 MPa	**K4520N14300**

For best performance, regulated pressure should always be set by increasing the pressure up to the desired setting.

Parker Hannifin Corporation
Pneumatic Division
Richland, Michigan
www.parker.com/pneumatics

P31 Mini Filter / Regulator

Symbol

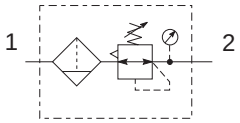

Features

- Integral 1/4" ports (NPT, BSPP & BSPT)
- High efficiency 5 micron element as standard
- Excellent water removal efficiency
- Robust but lightweight aluminum construction
- Positive bayonet latch to ensure correct & safe fitting
  Secondary pressure ranges 0-2 bar (0-30 psig), 0-4 bar, (0-60 psig), 0-8 bar (0-125 psig)
- Secondary aspiration plus balanced poppet provides quick response and accurate pressure regulation

Ordering Information

P 3 1 E * □ □ E □ □ □ N □ P

Engr. level
* Will be entered at factory

Thread type	
BSPP	**1**
BSPT	**2**
NPT	**9**

Port size	
1/4	**2**

Element	
5µ Element	**E**

Bowl type	
Poly bowl with bowl guard	**G**
Metal bowl without sight gauge	**M**

Drain type	
Pulse drain	**B**
Manual drain	**M**

Relief	
Relieving	**B**
Non relieving	**N**

Adjustment range	
With square gauge	
psig	**bar**
30* = **1**	2* = **V**
60 = **3**	4 = **S**
125 = **5**	8 = **T**
Without gauge	
psig	**bar**
30 = **Y**	2 = **Y**
60 = **L**	4 = **L**
125 = **N**	8 = **N**

* Unit comes with 0-4 bar, 0-60 psig gauge respectively

Mounting	
Plastic panel mount nut	**P**

*** Engineering Level will be entered at factory.**

Port size	Description	Order Code†	Flow‡ dm^3/s (scfm)	Max. bar (psig)	Height mm (inches)	Width mm (inches)	Depth mm (inches)
1/4"	8 bar (125 psig) Relieving - Poly bowl - Manual drain	**P31E*92EGMBN5P**	14 (30)	10 (150)	164.1 (6.46)	40 (1.58)	64 (2.53)
1/4"	8 bar (125 psig) Relieving - Poly bowl - Pulse drain	**P31E*92EGBBN5P**	14 (30)	10 (150)	164.1 (6.46)	40 (1.58)	64 (2.53)
1/4"	8 bar (125 psig) Relieving - Metal bowl - Manual drain	**P31E*92EMMBN5P**	14 (30)	17 (250)	164.1 (6.46)	40 (1.58)	64 (2.53)
1/4"	8 bar (125 psig) Relieving - Metal bowl - Pulse drain	**P31E*92EMBBN5P**	14 (30)	17 (250)	164.1 (6.46)	40 (1.58)	64 (2.53)

† **Standard part numbers shown in bold. For other models refer to Ordering Information chart above.**
‡ Flow with 10 bar (145 psig) inlet pressure, 6.3 bar (91.3) psig) set pressure and 1 bar (14.5 psig) pressure drop.

Parker Hannifin Corporation
Pneumatic Division
Richland, Michigan
www.parker.com/pneumatics

Specifications

Flow Capacity*	1/4	14 dm^3/s (30.0 scfm)
Operating Temperature	Plastic Bowl	-10°C to 52°C (14°F to 125°F)
	Metal Bowl	-10°C to 65.5°C (14°F to 150°F)
Max. Supply Pressure	Plastic Bowl	10 bar (150 psig)
	Metal Bowl	17 bar (250 psig)
Standard Filtration		5 Micron
Useful Retention		12 cm^3 (0.4 US oz.)
Adjusting Range Pressure		0-2 bar (30 psig)
		0-4 bar (60 psig)
		0-8 bar (125 psig)
Port Size	BSPP / BSPT / NPT	1/4
Gauge Port (2 ea.)**	BSPP / BSPT / NPT	1/8
Weight		0.19 kg (0.42 lbs)

* Inlet pressure 10 bar (145 psig). Secondary pressure 6.3 bar (91.3 psig).
** Non-gauge option only.

Air quality:
Within ISO 8573-1: 1991 Class 3 (Particulates)
Within ISO 8573-1: 2001 Class 6 (Particulates)

Materials of Construction

Body		Aluminum
Adjustment Knob		Acetal
Body Cap		ABS
Bonnet		PBT
Bowl	Plastic Bowl	Polycarbonate
	Metal Bowl	Aluminum
Bowl Guard		Nylon
Filter Element		Polyethylene
Seals	Plastic Bowl	Nitrile
	Metal Bowl	Nitrile
Springs		Steel
Valve Assembly		Brass / Nitrile
Diaphragm Assembly		Brass / Nitrile
Panel Nut		Acetal

For best performance, regulated pressure should always be set by increasing the pressure up to the desired setting.

Dimensions

mm (inches)

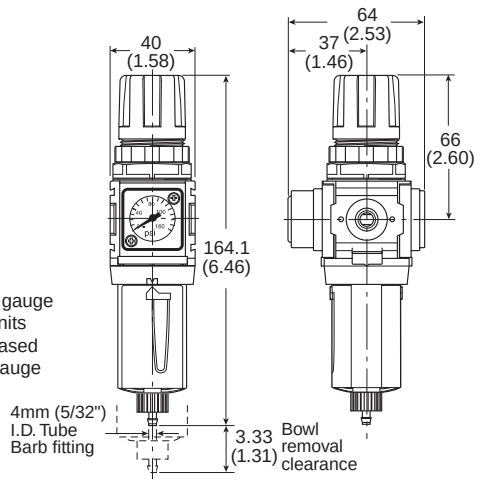

Note:
Flush-mounted gauge kits will not fit units originally purchased with threaded gauge ports.

⚠ WARNING

Product rupture can cause serious injury.
Do not connect regulator to bottled gas.
Do not exceed Maximum primary pressure rating.

Flow Charts

1/4 Filter/Regulator

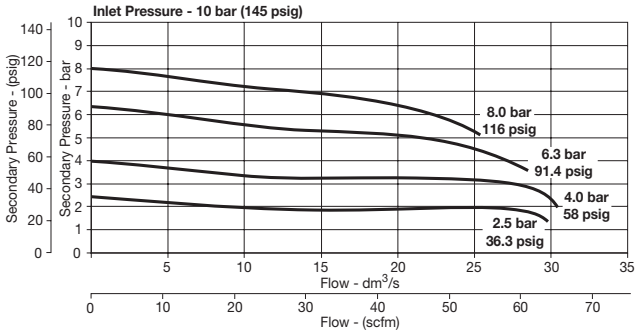

Repair and Service Kits

Plastic bowl / Bowl guard manual drain	**P31KA00BGM**
Metal bowl / w/o sight gauge manual drain	**P31KA00BMM**
Plastic bowl / Bowl guard pulse drain	**P31KA00BGB**
Metal bowl / w/o sight gauge pulse drain	**P31KA00BMB**
5µ particle filter element	**P31KA00ESE**
Regulator repair kit - Relieving	**P31KA00RC**
Regulator repair kit - Non-relieving	**P31KA00RH**
Panel mount nut - Aluminum	**P31KA00MM**
Panel mount nut - Plastic	**P31KA00MP**
Angle Bracket (uses panel mount threads)	**P31KA00MR**
C-Bracket (fits to body)	**P31KA00MW**
T-Bracket with body connector	**P31KA00MT**
Body connector	**P31KA00CB**

Gauges

Square flush mount gauge

0-4 bar	**K4511SCR04B**
0-10 bar	**K4511SCR11B**
0-60 psig	**K4511SCR060**
0-150 psig	**K4511SCR150**

For best performance, regulated pressure should always be set by increasing the pressure up to the desired setting.

Parker Hannifin Corporation
Pneumatic Division
Richland, Michigan
www.parker.com/pneumatics

P32 Compact Filter / Regulator

Symbol

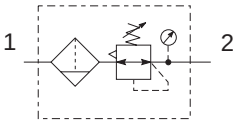

Features

- Integral 1/4", 3/8" or 1/2" ports (NPT, BSPP & BSPT)
- High efficiency 5 micron element as standard
- Excellent water removal efficiency
- Robust but lightweight aluminum construction
- Positive bayonet latch to ensure correct & safe fitting
- Secondary pressure ranges 0-2 bar (0-30 psig), 0-4 bar, (0-60 psig), 0-8 bar (0-125 psig), 0-17 bar (0-250 psig)
- Secondary aspiration plus balanced poppet provides quick response and accurate pressure regulation

Ordering Information

P 3 2 E * [ ] [ ] E [ ] [ ] [ ] N [ ] P

Thread type	
BSPP	**1**
BSPT	**2**
NPT	**9**

Port size	
1/4	**2**
3/8	**3**
1/2	**4**

Drain type	
Manual drain	**M**
Auto drain	**A**

Mounting	
Plastic panel mount nut	**P**

Engr. level
* Will be entered at factory

Element	
5µ Element	**E**

Relief	
Relieving	**B**
Non relieving	**N**

Bowl type	
Poly bowl with bowl guard	**G**
Metal bowl without sight gauge	**M**
Metal bowl with sight gauge	**S**

Adjustment range	
With round gauge	
2 bar; 30 psig; 0.2 MPa	**Z**
4 bar; 60 psig; 0.4 MPa	**M**
8 bar; 125 psig; 0.8 MPa	**G**
17 bar; 250 psig; 1.7 MPa	**J***
Without gauge	
2 bar; 30 psig; 0.2 MPa	**Y**
4 bar; 60 psig; 0.4 MPa	**L**
8 bar; 125 psig; 0.8 MPa	**N**
17 bar; 250 psig; 1.7 MPa	**H***

*** Engineering Level will be entered at factory.**

* Not available with poly bowl with bowl guard.

Port size	Description	Order Code†	Flow‡ dm^3/s (scfm)	Max. bar (psig)	Height mm (inches)	Width mm (inches)	Depth mm (inches)
1/4"	8 bar (125 psig) Relieving - Poly bowl - Manual drain	**P32E*92EGMBNGP**	42 (89)	10 (150)	254 (10.0)	60 (2.36)	60 (2.36)
1/4"	8 bar (125 psig) Relieving - Poly bowl - Auto drain	**P32E*92EGABNGP**	42 (89)	10 (150)	248 (9.76)	60 (2.36)	60 (2.36)
1/4"	8 bar (125 psig) Relieving - Metal bowl - Manual drain	**P32E*92ESMBNGP**	42 (89)	17 (250)	245 (9.66)	60 (2.36)	60 (2.36)
1/4"	8 bar (125 psig) Relieving - Metal bowl - Auto drain	**P32E*92ESABNGP**	42 (89)	17 (250)	254 (10.0)	60 (2.36)	95 (3.74)
3/8"	8 bar (125 psig) Relieving - Poly bowl - Manual drain	**P32E*93EGMBNGP**	58 (123)	10 (150)	254 (10.0)	60 (2.36)	60 (2.36)
3/8"	8 bar (125 psig) Relieving - Poly bowl - Auto drain	**P32E*93EGABNGP**	58 (123)	10 (150)	248 (9.76)	60 (2.36)	60 (2.36)
3/8"	8 bar (125 psig) Relieving - Metal bowl - Manual drain	**P32E*93ESMBNGP**	58 (123)	17 (250)	245 (9.66)	60 (2.36)	60 (2.36)
3/8"	8 bar (125 psig) Relieving - Metal bowl - Auto drain	**P32E*93ESABNGP**	58 (123)	17 (250)	254 (10.0)	60 (2.36)	95 (3.74)
1/2"	8 bar (125 psig) Relieving - Poly bowl - Manual drain	**P32E*94EGMBNGP**	64 (136)	10 (150)	245 (9.66)	60 (2.36)	95 (3.74)
1/2"	8 bar (125 psig) Relieving - Poly bowl - Auto drain	**P32E*94EGABNGP**	64 (136)	10 (150)	248 (9.76)	60 (2.36)	95 (3.74)
1/2"	8 bar (125 psig) Relieving - Metal bowl - Manual drain	**P32E*94ESMBNGP**	64 (136)	17 (250)	245 (9.66)	60 (2.36)	60 (2.36)
1/2"	8 bar (125 psig) Relieving - Metal bowl - Auto drain	**P32E*94ESABNGP**	64 (136)	17 (250)	254 (10.0)	60 (2.36)	60 (2.36)

† **Standard part numbers shown in bold. For other models refer to Ordering Information chart above.**
‡ Flow with 10 bar (145 psig) inlet pressure, 6.3 bar (91.3) psig) set pressure and 1 bar (14.5 psig) pressure drop.

Parker Hannifin Corporation
Pneumatic Division
Richland, Michigan
www.parker.com/pneumatics

Specifications

Flow Capacity*	1/4	42 dm^3/s (89 scfm)
	3/8	58 dm^3/s (123 scfm)
	1/2	64 dm^3/s (136 scfm)
Operating Temperature	Plastic Bowl	-25°C to 52°C (-13°F to 125°F)
	Metal Bowl	-25°C to 65.5°C (-13°F to 150°F)
Max. Supply Pressure	Plastic Bowl	10 bar (150 psig)
	Metal Bowl	17 bar (250 psig)
Standard Filtration		5 Micron
Useful Retention†		51 cm^3 (1.7 US oz.)
Adjusting Range Pressure		0-2 bar (30 psig)
		0-4 bar (60 psig)
		0-8 bar (125 psig)
		0-17 bar (250 psig)
Port Size	BSPP / BSPT / NPT	1/4, 3/8, 1/2
Gauge Port (2 ea.)	BSPP / BSPT / NPT	1/4
Weight	0.53 kg (1.17 lbs)	

* Inlet pressure 10 bar (145 psig). Secondary pressure 6.3 bar (91.3 psig).
† Useful retention refers to volume below the quiet zone baffle.

Air quality:
Within ISO 8573-1: 1991 Class 3 (Particulates)
Within ISO 8573-1: 2001 Class 6 (Particulates)

Materials of Construction

Body		Aluminum
Adjustment Knob		Acetal
Body Cap		ABS
Element Retainer / Baffle		Acetal
Bowl	Plastic Bowl	Polycarbonate
	Metal Bowl	Zinc
Bowl Guard		Nylon
Filter Element		Sintered Polyethylene
Seals	Plastic Bowl	Nitrile
	Metal Bowl	Nitrile
Springs	Main Regulating / Valve	Steel / S.S.
Valve Assembly		Brass / Nitrile
Diaphragm Assembly		Nitrile / Zinc
Panel Nut		Acetal
Sight Gauge	Metal Bowl	Polycarbonate

Dimensions

mm (inches)

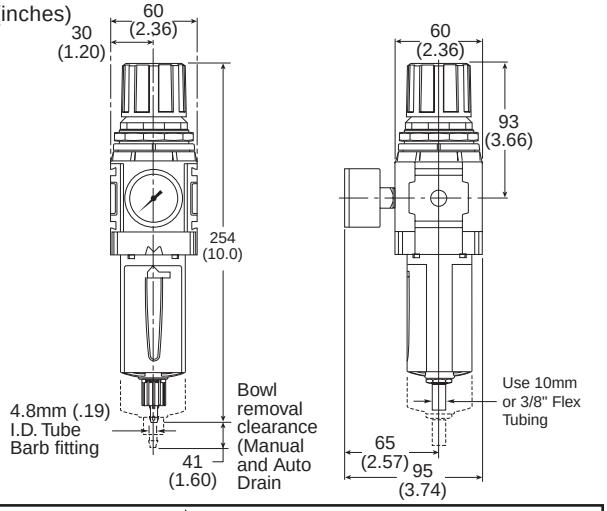

⚠ WARNING

Product rupture can cause serious injury.
Do not connect regulator to bottled gas.
Do not exceed Maximum primary pressure rating.

Flow Charts

1/4 Filter/Regulator

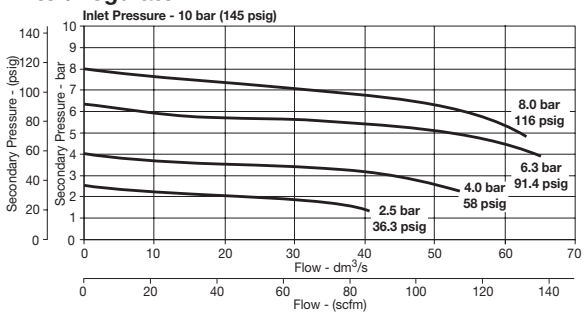

3/8 Filter/Regulator

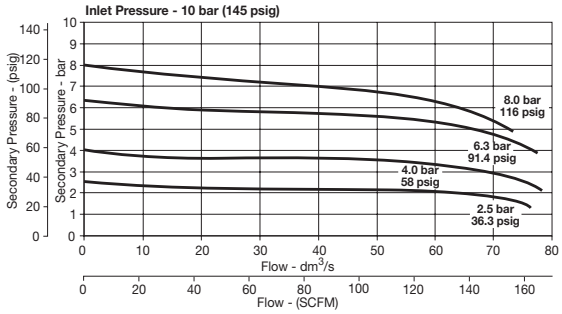

1/2 Filter/Regulator

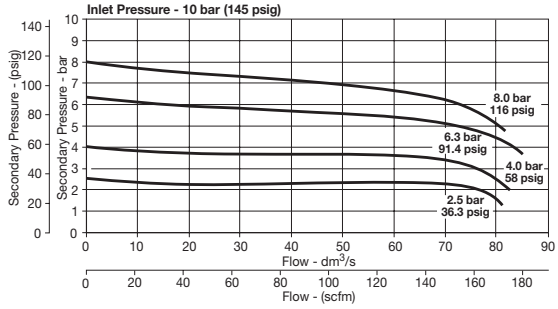

Repair and Service Kits

Plastic bowl / Bowl guard manual drain	**P32KA00BGM**
Metal bowl / Sight gauge manual drain	**P32KA00BSM**
Auto drain	**P32KA00DA**
5µ particle filter element	**P32KA00ESE**
Regulator repair kit - Relieving	**P32KA00RC**
Regulator repair kit - Non-relieving	**P32KA00RH**
Panel mount nut - Aluminum	**P32KA00MM**
Panel mount nut - Plastic	**P32KA00MP**
Angle Bracket (fits to panel mount threads)	**P32KA00MR**
T-Bracket (fits to body connector)	**P32KA00MB**
T-Bracket with body connector	**P32KA00MT**
Body connector	**P32KA00CB**

Gauges

50mm (2") Round 1/4" center back mount

0-30 psig / 0-2 bar / 0-0.2 MPa	**K4520N14030**
0-60 psig / 0-4 bar / 0-0.4 MPa	**K4520N14060**
0-160 psig / 0-11 bar / 0-1.1 MPa	**K4520N14160**
0-300 psig / 0-20 bar / 0-2 MPa	**K4520N14300**

For best performance, regulated pressure should always be set by increasing the pressure up to the desired setting.

Parker Hannifin Corporation
Pneumatic Division
Richland, Michigan
www.parker.com/pneumatics

P33 Standard Filter / Regulator

Symbol

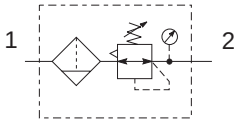

Features

- Integral 1/2" or 3/4" ports (NPT, BSPP & BSPT)
- High efficiency 5 micron element as standard
- Excellent water removal efficiency
- Robust but lightweight aluminum construction
- Positive bayonet latch to ensure correct & safe fitting
- Secondary pressure ranges 0-2 bar (0-30 psig), 0-4 bar, (0-60 psig), 0-8 bar (0-125 psig), 0-17 bar (0-250 psig)
- Secondary aspiration plus balanced poppet provides quick response and accurate pressure regulation

Ordering Information

P 3 3 E * ☐ ☐ E ☐ ☐ ☐ N ☐ P

Thread type	
BSPP	1
BSPT	2
NPT	9

Port size	
1/2	4
3/4	6

Drain type	
Manual drain	M
Auto drain	A

Mounting	
Plastic panel mount nut	P

Engr. level
* Will be entered at factory

Element	
5µ Element	E

Relief	
Relieving	B
Non relieving	N

Adjustment range	
With round gauge	
2 bar; 30 psig; 0.2 MPa	Z
4 bar; 60 psig; 0.4 MPa	M
8 bar; 125 psig; 0.8 MPa	G
17 bar; 250 psig; 1.7 MPa	J*
Without gauge	
2 bar; 30 psig; 0.2 MPa	Y
4 bar; 60 psig; 0.4 MPa	L
8 bar; 125 psig; 0.8 MPa	N
17 bar; 250 psig; 1.7 MPa	H*

Bowl type	
Poly bowl with bowl guard	G
Metal bowl without sight gauge	M
Metal bowl with sight gauge	S

*** Engineering Level will be entered at factory.**

* Not available with poly bowl with bowl guard.

Port size	Description	Order Code†	Flow‡ dm^3/s (scfm)	Max. bar (psig)	Height mm (inches)	Width mm (inches)	Depth mm (inches)
1/2"	8 bar (125 psig) Relieving - Poly bowl - Manual drain	**P33E*94EGMBNGP**	90 (191)	10 (150)	291 (11.44)	73 (2.9)	73 (2.9)
1/2"	8 bar (125 psig) Relieving - Poly bowl - Auto drain	**P33E*94EGABNGP**	90 (191)	10 (150)	285 (11.22)	73 (2.9)	73 (2.9)
1/2"	8 bar (125 psig) Relieving - Metal bowl - Manual drain	**P33E*94ESMBNGP**	90 (191)	17 (250)	282 (11.0)	73 (2.9)	73 (2.9)
1/2"	8 bar (125 psig) Relieving - Metal bowl - Auto drain	**P33E*94ESABNGP**	90 (191)	17 (250)	291 (11.44)	73 (2.9)	108 (4.27)
3/4"	8 bar (125 psig) Relieving - Poly bowl - Manual drain	**P33E*96EGMBNGP**	98 (208)	10 (150)	282 (11.0)	73 (2.9)	108 (4.27)
3/4"	8 bar (125 psig) Relieving - Poly bowl - Auto drain	**P33E*96EGABNGP**	98 (208)	10 (150)	285 (11.22)	73 (2.9)	108 (4.27)
3/4"	8 bar (125 psig) Relieving - Metal bowl - Manual drain	**P33E*96ESMBNGP**	98 (208)	17 (250)	291 (11.44)	73 (2.9)	73 (2.9)
3/4"	8 bar (125 psig) Relieving - Metal bowl - Auto drain	**P33E*96ESABNGP**	98 (208)	17 (250)	282 (11.0)	73 (2.9)	73 (2.9)

† **Standard part numbers shown in bold. For other models refer to Ordering Information chart above.**
‡ Flow with 10 bar (145 psig) inlet pressure, 6.3 bar (91.3) psig) set pressure and 1 bar (14.5 psig) pressure drop.

Parker Hannifin Corporation
Pneumatic Division
Richland, Michigan
www.parker.com/pneumatics

Specifications

Flow Capacity*	1/2	90 dm^3/s (191 scfm)
	3/4	98 dm^3/s (208 scfm)
Operating Temperature	Plastic Bowl	-25°C to 52°C (-13°F to 125°F)
	Metal Bowl	-25°C to 65.5°C (-13°F to 150°F)
Supply Pressure	Plastic Bowl	10 bar (150 psig)
	Metal Bowl	17 bar (250 psig)
Standard Filtration		5 Micron
Useful Retention†		85 cm^3 (2.8 US oz.)
Adjusting Range Pressure		0-2 bar (30 psig) 0-4 bar (60 psig) 0-8 bar (125 psig) 0-17 bar (250 psig)
Port Size	BSPP / BSPT / NPT	1/2, 3/4
Gauge Port (2 ea.)	BSPP / BSPT / NPT	1/4
Weight		0.85 kg (1.87 lbs)

* Inlet pressure 10 bar (145 psig). Secondary pressure 6.3 bar (91.3 psig).
† Useful retention refers to volume below the quiet zone baffle.

Air quality:
Within ISO 8573-1: 1991 Class 3 (Particulates)
Within ISO 8573-1: 2001 Class 6 (Particulates)

Materials of Construction

Body		Aluminum
Adjustment Knob		Acetal
Body Cap		ABS
Element Retainer / Baffle		Acetal
Bowls	Plastic Bowl	Polycarbonate
	Metal Bowl	Aluminum
Filter Element		Sintered Polyethylene
Seals	Plastic Bowl	Nitrile
	Metal Bowl	Nitrile
Springs	Main Regulating / Valve	Steel / S.S.
Valve Assembly		Brass / Nitrile
Diaphragm Assembly		Nitrile / Zinc
Panel Nut		Acetal
Sight Gauge	Metal Bowl	Polycarbonate

Dimensions

mm (inches)

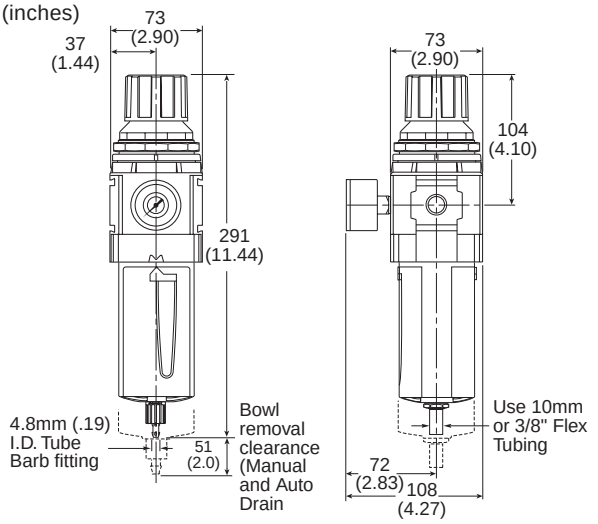

⚠ WARNING

Product rupture can cause serious injury.
Do not connect regulator to bottled gas.
Do not exceed Maximum primary pressure rating.

Flow Charts

1/2 Filter/Regulator

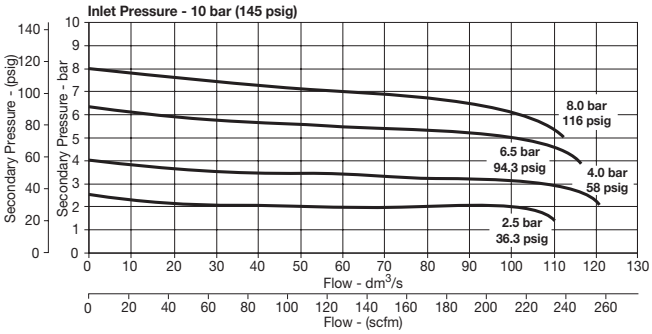

3/4 Filter/Regulator

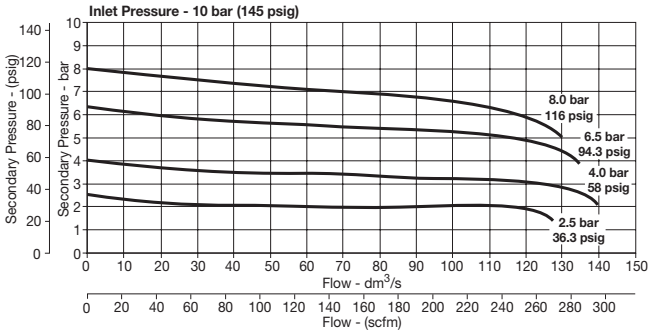

Repair and Service Kits

Plastic bowl / Bowl guard manual drain	**P33KA00BGM**
Metal bowl / Sight gauge manual drain	**P33KA00BSM**
Auto drain	**P32KA00DA**
5µ particle filter element	**P33KA00ESE**
Regulator repair kit - Relieving	**P33KA00RC**
Regulator repair kit - Non-relieving	**P33KA00RH**
Panel mount nut - Aluminum	**P33KA00MM**
Panel mount nut - Plastic	**P33KA00MP**
Angle Bracket (fits to panel mount threads)	**P33KA00MR**
T-Bracket (fits to body connector)	**P32KA00MB**
T-Bracket with body connector	**P32KA00MT**
Body connector	**P32KA00CB**

Gauges

50mm (2") Round 1/4" center back mount

0-30 psig / 0-2 bar / 0-0.2 MPa	**K4520N14030**
0-60 psig / 0-4 bar / 0-0.4 MPa	**K4520N14060**
0-160 psig / 0-11 bar / 0-1.1 MPa	**K4520N14160**
0-300 psig / 0-20 bar / 0-2 MPa	**K4520N14300**

For best performance, regulated pressure should always be set by increasing the pressure up to the desired setting.

Parker Hannifin Corporation
Pneumatic Division
Richland, Michigan
www.parker.com/pneumatics

P31 Mini Lubricator

Symbol

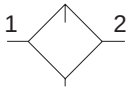

Lubricator
with drain

Features

- Integral 1/4" ports (NPT, BSPP & BSPT)
- Robust but lightweight aluminum construction
- Proportional oil delivery over a wide range of air flows
- Finger tip rachet control for precise oil drip rate adjustment

Ordering Information

P 3 1 L ***** [ ] [ ] **L** [ ] **N** **N**

Engr. level
* Will be entered at factory

Thread type	
BSPP	**1**
BSPT	**2**
NPT	**9**

Port size	
1/4	**2**

Type	
Oil mist standard sight dome	**L**

Bowl type	
Poly bowl with bowl guard	**G**
Metal bowl without sight gauge	**M**

Drain type	
No drain; closed end	**N**

Mounting	
No bracket	**N**

*** Engineering Level will be entered at factory.**

Port size	Description	Order Code†	Flow‡ dm^3/s (scfm)	Max. bar (psig)	Height mm (inches)	Width mm (inches)	Depth mm (inches)
1/4"	Poly bowl - No drain	**P31L*92LGNN**	13 (28)	10 (150)	147.5 (5.80)	40 (1.58)	42.7 (1.68)
1/4"	Metal bowl - No drain	**P31L*92LMNN**	13 (28)	17 (250)	147.5 (5.80)	40 (1.58)	42.7 (1.68)

† **Standard part numbers shown in bold. For other models refer to Ordering Information chart above.**
‡ Flow with 6.3 bar (91.3 psig) inlet pressure and 0.34 bar (4.9 psig) pressure drop.

Parker Hannifin Corporation
Pneumatic Division
Richland, Michigan
www.parker.com/pneumatics

Specifications

Flow Capacity*	1/4	13 dm^3/s (28 scfm)
Operating Temperature	Plastic Bowl	-10°C to 52°C (14°F to 125°F)
	Metal Bowl	-10°C to 65.5°C (14°F to 150°F)
Max. Supply Pressure	Plastic Bowl	10 bar (150 psig)
	Metal Bowl	17 bar (250 psig)
Useful Retention		18 cm^3 (0.6 US oz.)
Port Size	BSPP / BSPT / NPT	1/4
Weight		0.13 kg (0.29 lbs)

* Inlet pressure 6.3 bar (91.3 psig). Pressure drop 0.34 bar (4.9 psig).

Flow Charts

1/4 Lubricator

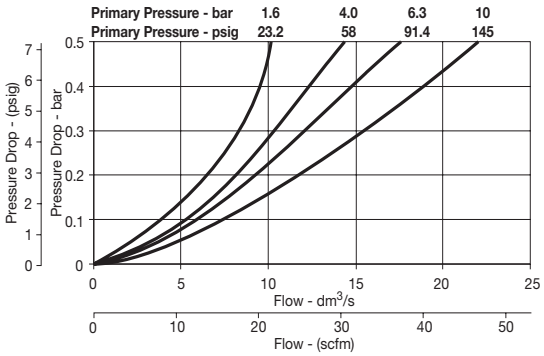

Materials of Construction

Body		Aluminum
Body Cap		ABS
Bowl	Plastic Bowl	Polycarbonate
	Metal Bowl	Aluminum
Seals	Plastic Bowl	Nitrile
	Metal Bowl	Nitrile
Sight Dome		Polycarbonate
Suggested Lubricant		ISO / ASTM VG32
Pick-up Filter		Sintered Bronze

Dimensions

mm (inches)

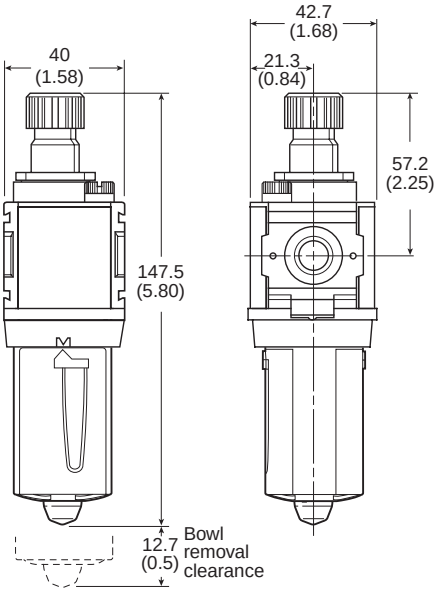

Repair and Service Kits

Plastic bowl / Bowl guard manual drain	**P31KA00BGN**
Drip control assembly	**P32KA00PG**
Fill plug	**P31KA00PL**
C-Bracket (fits to body)	**P31KA00MW**
T-Bracket with body connector	**P31KA00MT**
Body connector	**P31KA00CB**

Suggested Lubricant ..... **F442 Oil**

Petroleum based oil of 100 to 200 SUS viscosity at 38°C (100°F) and an aniline point greater than 93°C (200°F)

(DO NOT USE OILS WITH ADDITIVES, COMPOUNDED OILS CONTAINING SOLVENTS, GRAPHITE, DETERGENTS, OR SYNTHETIC OILS.)

Parker Hannifin Corporation
Pneumatic Division
Richland, Michigan
www.parker.com/pneumatics

P32 Compact Lubricator

Symbol

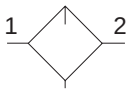

Lubricator
with drain

Features

- Integral 1/4", 3/8" or 1/2" ports (NPT, BSPP & BSPT)
- Robust but lightweight aluminum construction
- Proportional oil delivery over a wide range of air flows
- Finger tip rachet control for precise oil drip rate adjustment
- Fill from top under system pressure

Ordering Information

P 3 2 L * [ ] [ ] L [ ] N N

Engr. level	
* Will be entered at factory	

Thread type	
BSPP	**1**
BSPT	**2**
NPT	**9**

Port size	
1/4	**2**
3/8	**3**
1/2	**4**

Type	
Oil mist standard sight dome	**L**

Bowl type	
Poly bowl with bowl guard	**G**
Metal bowl with sight gauge	**S**

Drain type	
No drain; closed end	**N**

Mounting	
No bracket	**N**

*** Engineering Level will be entered at factory.**

Port size	Description	Order Code†	Flow‡ dm^3/s (scfm)	Max. bar (psig)	Height mm (inches)	Width mm (inches)	Depth mm (inches)
1/4"	Poly bowl - No drain	**P32L*92LGNN**	18 (38)	10 (150)	211 (8.30)	60 (2.36)	60 (2.36)
1/4"	Metal bowl - No drain	**P32L*92LSNN**	18 (38)	17 (250)	211 (8.30)	60 (2.36)	60 (2.36)
3/8"	Poly bowl - No drain	**P32L*93LGNN**	32 (68)	10 (150)	211 (8.30)	60 (2.36)	60 (2.36)
3/8"	Metal bowl - No drain	**P32L*93LSNN**	32 (68)	17 (250)	211 (8.30)	60 (2.36)	60 (2.36)
1/2"	Poly bowl - No drain	**P32L*94LGNN**	47 (100)	10 (150)	211 (8.30)	60 (2.36)	60 (2.36)
1/2"	Metal bowl - No drain	**P32L*94LSNN**	47 (100)	17 (250)	211 (8.30)	60 (2.36)	60 (2.36)

† **Standard part numbers shown in bold. For other models refer to Ordering Information chart above.**
‡ Flow with 6.3 bar (91.3 psig) inlet pressure and 0.34 bar (4.9 psig) pressure drop.

Parker Hannifin Corporation
Pneumatic Division
Richland, Michigan
www.parker.com/pneumatics

Specifications

Flow Capacity*	1/4	18 dm^3/s (38 scfm)
	3/8	32 dm^3/s (68 scfm)
	1/2	47 dm^3/s (100 scfm)
Operating Temperature	Plastic Bowl	-10°C to 52°C (14°F to 125°F)
	Metal Bowl	-10°C to 65.5°C (14°F to 150°F)
Max. Supply Pressure	Plastic Bowl	10 bar (150 psig)
	Metal Bowl	17 bar (250 psig)
Useful Retention		121 cm^3 (4.09 US oz.)
Port Size	BSPP / BSPT / NPT	1/4, 3/8, 1/2
Weight		0.31 kg (0.68 lbs)

* Inlet pressure 6.3 bar (91.3 psig). Pressure drop 0.34 bar (4.9 psig).

Materials of Construction

Body		Aluminum
Body Cap		ABS
Bowls	Plastic Bowl	Polycarbonate
	Metal Bowl	Aluminum
Seals	Plastic Bowl	Nitrile
	Metal Bowl	Nitrile
Sight Dome		Polycarbonate
Sight Gauge	Metal Bowl	Polycarbonate
Suggested Lubricant		ISO / ASTM VG32
Pick-up Filter		Sintered Bronze

Dimensions

mm (inches)

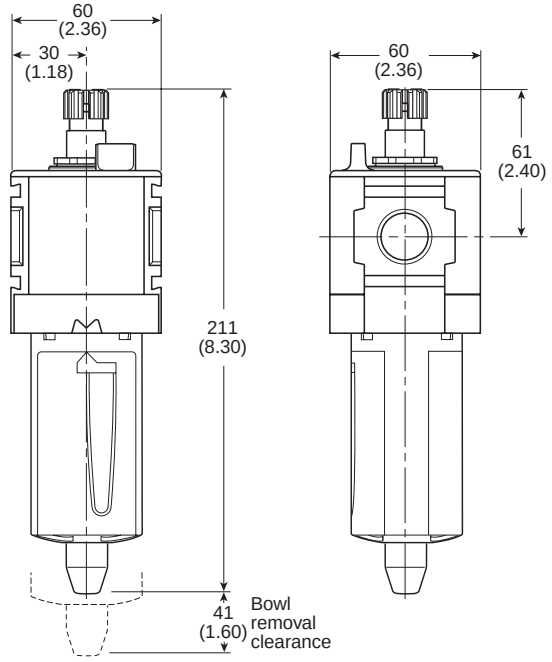

Flow Charts

1/4 Lubricator

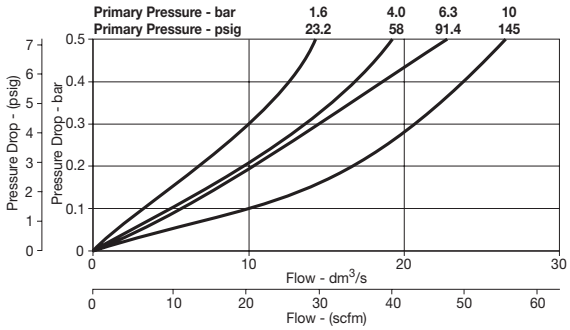

3/8 Lubricator

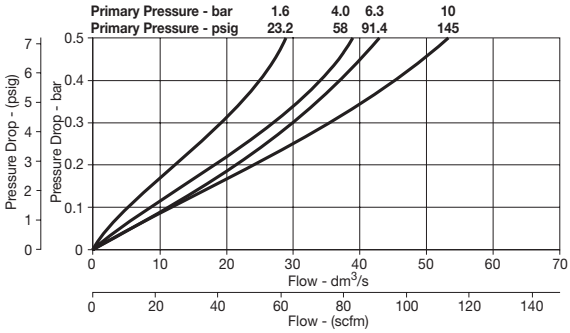

1/2 Lubricator

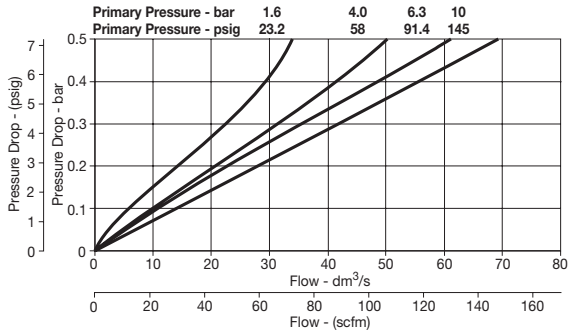

Repair and Service Kits

Plastic bowl / Bowl guard manual drain	**P32KA00BGN**
Drip control assembly	**P32KA00PG**
Fill plug	**P32KA00PL**
L-Bracket (fits to body)	**P32KA00ML**
T-Bracket (fits to body connector)	**P32KA00MB**
T-Bracket with body connector	**P32KA00MT**
Body connector	**P32KA00CB**

Suggested Lubricant ..... **F442 Oil**

Petroleum based oil of 100 to 200 SUS viscosity at 38°C (100°F) and an aniline point greater than 93°C (200°F)

(DO NOT USE OILS WITH ADDITIVES, COMPOUNDED OILS CONTAINING SOLVENTS, GRAPHITE, DETERGENTS, OR SYNTHETIC OILS.)

Parker Hannifin Corporation
Pneumatic Division
Richland, Michigan
www.parker.com/pneumatics

P33 Standard Lubricator

Symbol

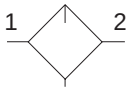

Lubricator
with drain

Features

- Integral 1/2" or 3/4" ports (NPT, BSPP & BSPT)
- Robust but lightweight aluminum construction
- Proportional oil delivery over a wide range of air flows
- Finger tip rachet control for precise oil drip rate adjustment
- Fill from top under system pressure

Ordering Information

P 3 3 L ***** [ ] [ ] **L** [ ] **N** **N**

Engr. level
* Will be entered at factory

Thread type	
BSPP	**1**
BSPT	**2**
NPT	**9**

Port size	
1/2	**4**
3/4	**6**

Type	
Oil mist standard sight dome	**L**

Bowl type	
Poly bowl with bowl guard	**G**
Metal bowl with sight gauge	**S**

Drain type	
No drain; closed end	**N**

Mounting	
No bracket	**N**

*** Engineering Level will be entered at factory.**

Port size	Description	Order Code†	Flow‡ dm^3/s (scfm)	Max. bar (psig)	Height mm (inches)	Width mm (inches)	Depth mm (inches)
1/2"	Poly bowl - No drain	**P33L*94LGNN**	48 (102)	10 (150)	234 (9.21)	73 (2.9)	73 (2.9)
1/2"	Metal bowl - No drain	**P33L*94LSNN**	48 (102)	17 (250)	234 (9.21)	73 (2.9)	73 (2.9)
3/4"	Poly bowl - No drain	**P33L*96LGNN**	68 (144)	10 (150)	234 (9.21)	73 (2.9)	73 (2.9)
3/4"	Metal bowl - No drain	**P33L*96LSNN**	68 (144)	17 (250)	234 (9.21)	73 (2.9)	73 (2.9)

† **Standard part numbers shown in bold. For other models refer to Ordering Information chart above.**
‡ Flow with 6.3 bar (91.3 psig) inlet pressure and 0.34 bar (4.9 psig) pressure drop.

Parker Hannifin Corporation
Pneumatic Division
Richland, Michigan
www.parker.com/pneumatics

Specifications

Flow Capacity*	1/2	48 dm^3/s (102 scfm)
	3/4	68 dm^3/s (144 scfm)
Operating Temperature	Plastic Bowl	-10°C to 52°C (14°F to 125°F)
	Metal Bowl	-10°C to 65.5°C (14°F to 150°F)
Max. Supply Pressure	Plastic Bowl	10 bar (150 psig)
	Metal Bowl	17 bar (250 psig)
Useful Retention		181 cm^3 (6.1 US oz.)
Port Size	BSPP / BSPT / NPT	1/2, 3/4
Weight		0.47 kg (1.04 lbs)

* Inlet pressure 6.3 bar (91.3 psig). Pressure drop 0.34 bar (4.9 psig).

Materials of Construction

Body		Aluminum
Body Cap		ABS
Bowls	Plastic Bowl	Polycarbonate
	Metal Bowl	Aluminum
Seals	Plastic Bowl	Nitrile
	Metal Bowl	Nitrile
Sight Dome		Polycarbonate
Sight Gauge	Metal Bowl	Polycarbonate
Suggested Lubricant		ISO / ASTM VG32
Pick-up Filter		Sintered Bronze

Flow Charts

1/2 Lubricator

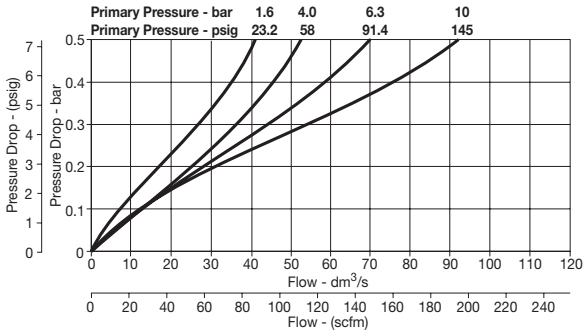

3/4 Lubricator

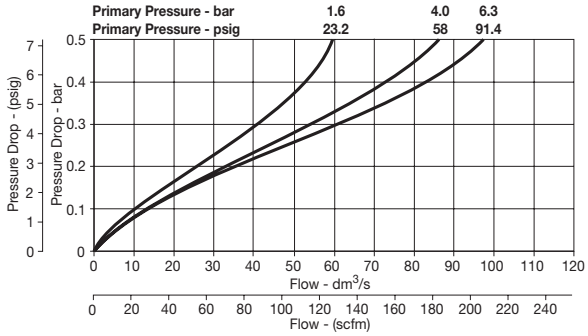

Dimensions

mm (inches)

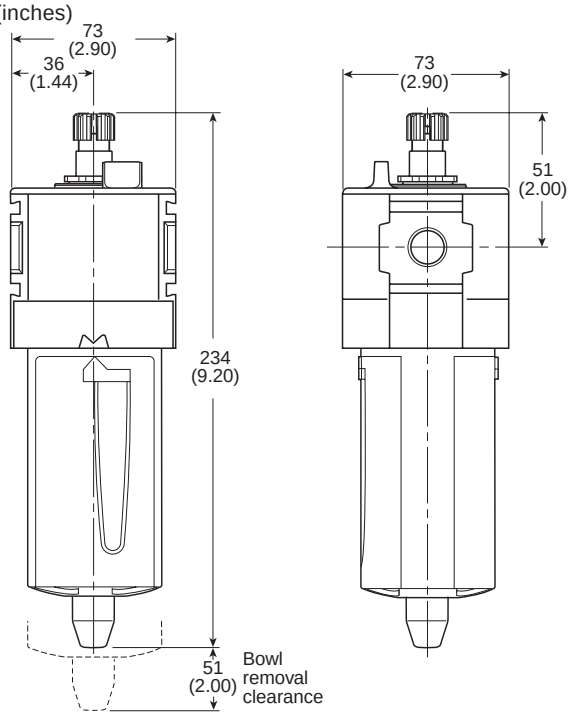

Repair and Service Kits

Plastic bowl / Bowl guard manual drain	**P33KA00BGN**
Drip control assembly	**P32KA00PG**
Fill plug	**P32KA00PL**
L-Bracket (fits to body)	**P33KA00ML**
T-Bracket (fits to body connector)	**P32KA00MB**
T-Bracket with body connector	**P32KA00MT**
Body connector	**P32KA00CB**

Suggested Lubricant ..... **F442 Oil**

Petroleum based oil of 100 to 200 SUS viscosity at 38°C (100°F) and an aniline point greater than 93°C (200°F)

(DO NOT USE OILS WITH ADDITIVES, COMPOUNDED OILS CONTAINING SOLVENTS, GRAPHITE, DETERGENTS, OR SYNTHETIC OILS.)

Parker Hannifin Corporation
Pneumatic Division
Richland, Michigan
www.parker.com/pneumatics

P31P / P32P Electronic Proportional Regulator

P31P Series
Bottom exhaust

P32P Series
Bottom exhaust

Features

- Very fast response times
- Accurate output pressure
- Micro parameter settings
- Selectable I/O parameters
- Quick, full flow exhaust
- LED display indicates output pressure
- No air consumption in steady state
- Multiple mounting options
- Protection to IP65
- P31P flows to 19 dm^3/s (40 scfm)
- P32P flows to 57 dm^3/s (120 scfm)

Ordering Information

P 3 [ ] P * 1 [ ] A [ ] 2 [ ] [ ] 1 A

Body size	
Global Mini (1/4")	1
Global Compact (1/2")	2

Thread type	
BSPP	1
BSPT	2
NPT	9

Port size	
Global Mini (1/4")	2
Global Compact (1/2")	4

Version	
Bottom ported exhaust (NC)	A
Bottom ported forced exhaust (NO)*	E

* When the supply voltage is lost the unit will automatically exhaust the regulated pressure to 0 bar (atmospheric pressure)

Pressure Range	
0 - 2 bar (0-29 psig)	Z
0 - 10 bar (0-145 psig)	D

Power supply	
24 volts	2

Control Signal	
0-10 V†	V

† Factory setting is 0-10 V control signal. 4-20 mA control signal available via parameter 4 on keypad.

Output Signal	
Digital, PNP	D
PNP or 0-10V	P
NPN or 0-10V	N
4-20mA fixed	M

D) Digital PNP output only, no analog output selectable
P) Digital PNP and analogue 0-10V outputs selectable, by means of parameter 6. (Factory default 0-10V)
N) Digital NPN and analog 0-10 V outputs selectable by means of parameter 6. (Factory default 0-10V)
M) Analog 4-20mA output only.
Note: On all analog outputs the F.S. value can be adjusted by means of parameter 8

Input connector	
M12 (4 pin)	1

*** Engineering Level will be entered at factory.**

P31P Mounting Brackets

Order Code	Description
P3HKA00ML	L-Bracket mounting kit
P3HKA00MC	Foot bracket mounting kit

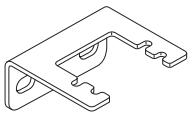

L-Bracket

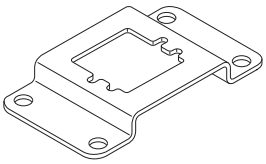

Foot Bracket

P32P Mounting Brackets

Order Code	Description
P3KKA00ML	L-Bracket mounting kit
P3KKA00MC	Foot bracket mounting kit

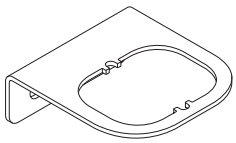

L-Bracket

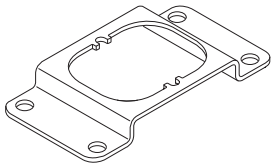

Foot Bracket

Cables

Order Code	Description
CB-M12-4P-2M	2 mtr. cable with moulded straight M12x1 connector

Note:
These brackets fit both Proportional Regulators and Combined Soft Start & Dump Valves.

Parker Hannifin Corporation
Pneumatic Division
Richland, Michigan
www.parker.com/pneumatics

Technical Information

Working medium
Compressed air or inert gasses, filtered to 40µ.

Supply pressure

	Max. Operating Pressure:
2 bar unit:	3 bar (43.5 psig)
10 bar unit:	10.5 bar (152 psig)
Min. Operating Pressure	P2 Pressure + 0.5 bar (7.3 psig)

Pressure control range
Available in three pressure ranges, 0-2 bar (0-29 psig), 0-7 bar (0-101.5 psig) or 0-10 bar (0-145 psig). Pressure range can be changed through the software at all times.
(parameter 19)

Temperature range
0°C up to +50°C (32°F up to122°F)

Weights:
P31P = 0.291 kg (0.64 lbs)
P32P = 0.645 kg (1.42 lbs)

Air consumption
No consumption in stable regulated situation.

Display
The regulator is provided with a digital display, indicating the output pressure, either in bar or psig.
The factory setting is as indicated on the label, can be changed through to software at all times (parameter 14)

Supply voltage
24 VDC +/- 10%

Power consumption
Max. 1.1W with unloaded signal outputs

Control signals
The electronic pressure regulator can be externally controlled through an analogue control signal of either
0-10V or 4-20mA. (parameter 4).

Output signals
As soon as the output pressure is within the signal band a signal is given of 24VDC, PNP Ri = 1 kOhm
Outside the signal band this connection is 0V.

Connections
(In case of output signal (Option D)
Central M12 connector 4-pole
The electrical connections are as follows:

	Pin No.	Function	Color
1	24 V	Supply	Brown
2	0 to 10 V	Control Signal Ri = 100k Ω	White
	4 to 20mA	Control Signal Ri = 500k Ω	
3	0 V (GND)	Supply	Blue
4	24 V	Alarm Output Signal	Black

Schematic

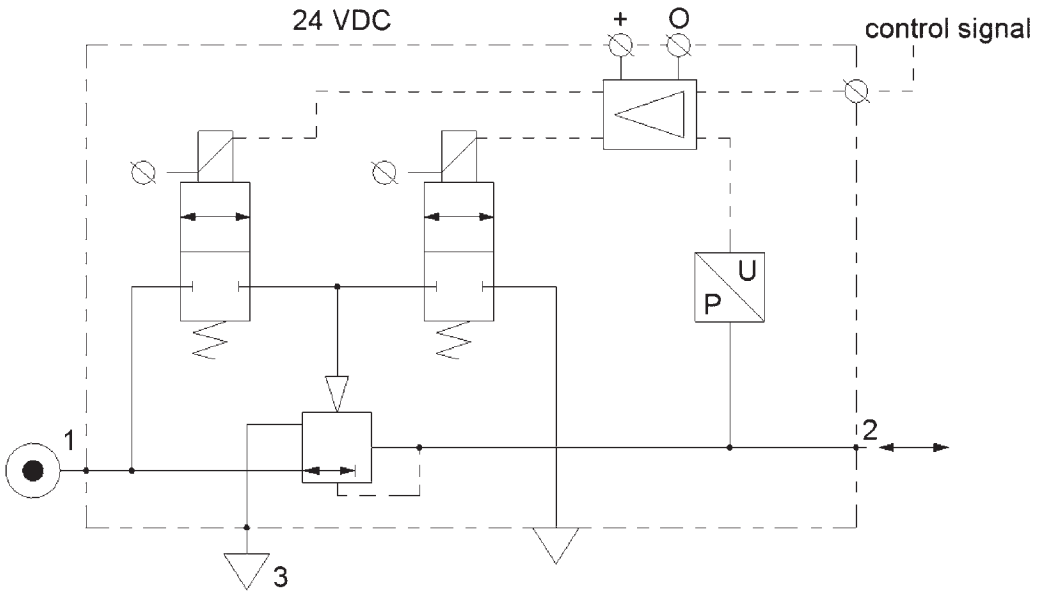

Parker Hannifin Corporation
Pneumatic Division
Richland, Michigan
www.parker.com/pneumatics

Technical information

Dead band
The dead band is preset at 1.3% of Full Scale*, adjustable via parameter 13.

Accuracy
Linearity: = < 0.3% of Full Scale.*

Proportional band
The proportional band is preset at 10% of Full Scale.*

Fail safe operation

- If the P31P / P32P unit has an “0” or “A” in the 12th digit of the model number
  - When the supply voltage drops, the electronic control reverts to the fail safe mode. The last known output pressure is maintained at approximately the same level depending upon air consumption. The digital display indicates the last known pressure setting.
  - When the supply voltage is reinstated to the correct level, the valve moves from the fail safe mode and the output pressure immediately follows the control signal requirement. The display indicates the actual output pressure.
  - Note: In the event of loss of both power and inlet pressure the unit will exhaust downstream pressure.
- If the P31P / P32P unit has an “E” in the 12th digit of the model number
  - When the supply voltage drops, the electronic control reverts to “Forced Exhaust Mode” and will automatically exhaust the downstream (regulated) pressure.
  - When the supply voltage is reinstated to the correct level the unit will return to normal operation and follows the control signal requirement. The display indicates the actual pressure.
- If the unit has been programmed in manual mode (not with a control signal) the unit will EXHAUST and the regulator will need to be reset when power is applied.

Full exhaust
Complete exhaust of the regulator is defined as
P2 ≤ 1% Full Scale

*** Full scale (F.S.)**
For 2 bar (29 psig) versions this will be 2 barr (29 psig), for the 10 bar (145 psig) version full scale will be 10 bar (145 psig).

Degree of protection
IP65

EU conformity
CE: standard
EMC: according to directive 89/336/EEC
The new pressure regulator is in accordance with:

EN 61000-6-1:2001 **EN 61000-6-2:2001**
EN 61000-6-3:2001 **EN 61000-6-4:2001**

These standards ensure that this unit meets the highest level of EMC protection.

Mounting position
Preferably vertical, with the cable gland on top.

Materials: P31P & P32P

- Magnet Core ..... Steel
- Solenoid Valve Poppet ..... FPM
- Solenoid Valve Housing ..... Techno Polymer
- Regulator Body (P31P & P32P versions) ..... Aluminium
- Regulator Top Housing ..... Nylon
- Valve Head ..... Brass & NBR
- Remaining Seals ..... NBR

Advanced functionality

Pilot valve protection
When the required output pressure can not be achieved because of a lack of input pressure the unit will open fully and will display NoP. Approximately every 10 seconds the unit will retry. The output pressure will then be approximately equal to the inlet pressure. As soon as the input pressure is back on the required level, the normal control function follows.

Safety exhaust
Should the **control signal** fall below 0.1 volts the valve will automatically dump downstream system pressure .

Input protection
The unit has built-in protection against failure and burnout resulting from incorrect input value, typically:

The 24VDC supply is incorrectly connected to the setpoint input, the display will show ‘OL’, as an overload indication. The unit will need to be rewired and when correctly connected will operate normally.

The overload indicator ‘OL’ will also appear should the wrong input value be applied or the wrong input value be programmed: 4 - 20m instead of 0 - 10V. To correct this a different set point value should be input or the unit reprogrammed to correct the set point value acceptance. (via parameter 4).

Response time	P31P	P32P
2 to 4 bar	25 msecs	35 msecs
1 to 6 bar	55 msecs	135 msecs
4 to 2 bar	70 msecs	85 msecs
6 to 1 bar	80 msecs	225 msecs

To fill volume of:
100cm^3 - P31P
330cm^3 - P32P
connected to the outlet of the regulator.

Settings
The regulator is pre-set at the factory. If required, adjustments can be made.

Flow Charts

P31P Regulator 1/4” Ports

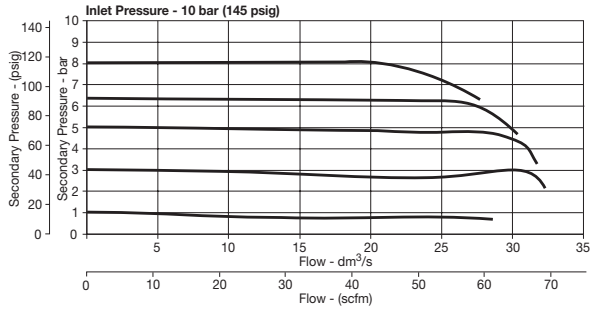

P32P Regulator 1/2” Ports

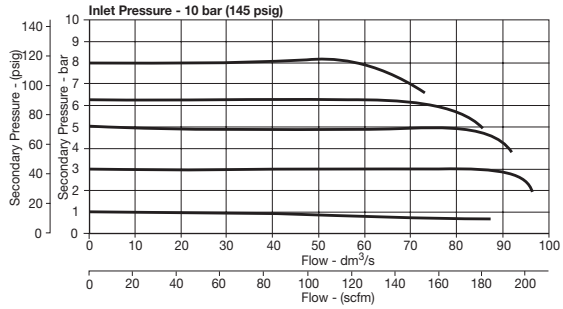

Parker Hannifin Corporation
Pneumatic Division
Richland, Michigan
www.parker.com/pneumatics

How to change parameters

Pressing the Accept key “acc” for more than 3 seconds, will activate parameter change mode. The user can then select the parameters by pressing up or down key. (display will show Pxx). When parameter number is correct, pressing accept again will enter parameter number.(display will show parameter value).

Pressing the up or down key will change the parameter itself. (display will flash indicating parameter editing mode). Pressing the accept key will accept the new parameter value. (all digits will flash whilst being accepted).

After releasing all keys , the next parameter number will be presented on the display. (you may step to the next parameter). When no key is pressed, after 3 seconds the display will show the actual output pressure.

When the unit is initially powered up allow approximately 10 seconds for the unit to “boot-up” before changing parameter settings.

Only parameter numbers 0, 4, 6, 8, 9, 14, 18, 19, 20, 12, 13 and 21 are accessible to edit. All other parameters are fixed.

Manual mode:

When keys DOWN and UP are pressed during startup, (connecting to the 24V power supply) manual mode is activated. This means that the user is able to in/decrease the output pressure of the regulator, by pressing the UP or DOWN key. During this action the display will blink, indicating that the manual mode is activated. After powering up again, the unit will revert back to normal mode.

Back to Factory Setting

After start up. (Power is on)
Entering this value in parameter 0 will store the calibrated factory data into the working parameters.
(Default calibration data is used)

Parameter Number 0 – Reset Back to Factory Settings

Step	1	2	3	4	5	
Press	acc 3-6 seconds	▼ or ▲	acc	▼ or ▲	acc	
Until Display Reads	Pxx	P00	000. Flashing Decimal	003. Flashing Decimal	003 Flashing	P01
Description	Accesses changeable parameters.	Accesses parameter no. 0.	Displays current parameter value.	Edits parameter. 3 = standard factory settings. If other than 3, use Up or Down Arrow and accept 3	Accepts and saves new parameter setting.	Sequences to next parameter.

Set Control Signal

The unit is factory set for 0-10 V control signal. If 4-20 mA control signal is required, change parameter 4.

Parameter Number 4 – Set Control Signal in Volts or Milliamps

Step	1	2	3	4	5	
Press	acc 3-6 seconds	▼ or ▲	acc	▼ or ▲	acc	
Until Display Reads	Pxx	P04	001. Flashing Decimal	000. Flashing Decimal	000 Flashing	P05
Description	Accesses changeable parameters.	Accesses parameter no. 4.	Displays current parameter value. 1 = V 0 = mA	Edits parameter.	Accepts and saves new parameter setting.	Sequences to next parameter.

Parker Hannifin Corporation
Pneumatic Division
Richland, Michigan
www.parker.com/pneumatics

Set Output Signal

Parameter 6 is used to set the type of output signal to your PLC.
This parameter is used as follows:

Output Signal option “0” = Digital Output – PNP
- Factory set at “0” Non Adjustable

Output Signal option “P” = Digital PNP or Analog 1-10V
- Factory set at “1” for Analog Signal
- Convert to Digital PNP by changing parameter to “0” setting

Output Signal option “N” = Digital NPN or Analog 1-10V
- Factory set at “1” Analog Signal
- Convert to Digital NPN by changing parameter to “0”

Output Signal option “M” = Analog 4-20 mA
- Factory set at “2” Non Adjustable

Parameter Number 6 – Set Output Signal

Step	1	2	3	4	5	
Press	acc 3-6 seconds	▼ or ▲	acc	▼ or ▲	acc	
Until Display Reads	Pxx	P06	001.	###. Flashing Decimal (Value 0, 1 or 2)	###. Flashing	P07
Description	Accesses changeable parameters.	Accesses parameter no. 6.	Displays current parameter value. 1 = m factory default for P3H with analog options	Edits parameter. 0 = digital (NPN or PNP) 1 = analog 0..10V 2 = analog 4..20 mA	Accepts and saves new parameter setting.	Sequences to next parameter.

Adjust Span Analog Output Signal

Set value is a % of Full Analog range. As an example for a 0-10V output signal, the original factory setting of 100% will give you an adjustment of 0-10V. If you reset Parameter 8 to 50%, the new output range would be 0-5V or 50% of the full range.

In the event that the output signal is to low, in a certain application, you can adjust it by increasing Parameter 8 to a maximum value of 130% of scale.

Note that all values are nominal and that an actual measurement may be required to ensure signal strength.

Parameter Number 8 – Adjust Span Analog Output Signal

Step	1	2	3	4	5	
Press	acc 3-6 seconds	▼ or ▲	acc	▼ or ▲	acc	
Until Display Reads	Pxx	P08	100. Flashing Decimal (For 2 bar versions value = 92)	###. Flashing Decimal (Value between 0 and 130)	###. Flashing	P09
Description	Accesses changeable parameters.	Accesses parameter no. 8.	Displays current parameter value.	Edits parameter.	Accepts and saves new parameter setting and implements the new analog signal span.	Sequences to next parameter.

Parker Hannifin Corporation
Pneumatic Division
Richland, Michigan
www.parker.com/pneumatics

Adjust Digital Display

If necessary, adjustments can be made to the digital display when using an external pressure sensor.

Parameter Number 9 – Adjust Digital Display Value (Pressure Calibration)

Step	1	2	3	4	5	
Press	acc 3-6 seconds	▼ or ▲	acc	▼ or ▲	acc	
Until Display Reads	Pxx	P09	###. Flashing Decimal	###. Flashing Decimal	### Flashing	P 10
Description	Accesses changeable parameters.	Accesses parameter no. 9.	Displays current digital display	Use up or down arrows and accept to adjust the display value if using an external pressure sensor.	Accepts and saves new parameter setting.	Sequences to next parameter.

Set Pressure Scale

Units with NPT port threads are supplied with a factory set psig pressure scale. Use parameter 14 to change scale to bar.

Parameter Number 14 – Set Pressure Scale in psig or bar

Step	1	2	3	4	5	
Press	acc 3-6 seconds	▼ or ▲	acc	▼ or ▲	acc	
Until Display Reads	Pxx	P 14	001. Flashing Decimal	000. Flashing Decimal	000 Flashing	P 15
Description	Accesses changeable parameters.	Accesses parameter no. 14.	Displays current parameter value. 1 = psig 0 = bar 2 = MPA	Edits parameter.	Accepts and saves new parameter setting.	Sequences to next parameter.

Parker Hannifin Corporation
Pneumatic Division
Richland, Michigan
www.parker.com/pneumatics

Preset Minimum Pressure

If there is a need for a pre-set Minimum pressure, use parameter 18. (Note: preset pressure is affected by % P19.)

Parameter Number 18 – Set Minimum Preset Pressure

Step	1	2	3	4	5	
Press	acc 3-6 seconds	▼ or ▲	acc	▼ or ▲	acc	
Until Display Reads	Pxx	P 18	000.	###. Flashing Decimal (value between 0 and 200)	### Flashing	P 19
Description	Accesses changeable parameters.	Accesses parameter no. 18.	Displays current parameter value. Incremental value is: 2 bar unit: x 2 mbar x % P19 10 bar unit: x 10 mbar x % P19	Edits parameter.	Accepts and saves new parameter setting.	Sequences to next parameter.

Set Pressure Correction

Pressure correction allows the user to set a Maximum pressure as a percentage of secondary pressure F.S.

Example: If F.S. is 10 bar, set parameter 19 to 50 for Maximum preset pressure of 5 bar.

Pressure correction also affects the Minimum preset pressure in parameter 18.

Example: If F.S. is 10 bar and parameter 18 is set to a value of 100 (1 bar), and parameter 19 is set to 50%, then the actual Minimum preset pressure seen is 0.5 bar.

Parameter Number 19 – Set Maximum Preset Pressure

Step	1	2	3	4	5	
Press	acc 3-6 seconds	▼ or ▲	acc	▼ or ▲	acc	
Until Display Reads	Pxx	P 19	100.	###. Flashing Decimal (value between 0 and 100)	### Flashing	P20
Description	Accesses changeable parameters.	Accesses parameter no. 19.	Displays current parameter value. Incremental value is: % of F.S.	Edits parameter.	Accepts and saves new parameter setting.	Sequences to next parameter.

Parker Hannifin Corporation
Pneumatic Division
Richland, Michigan
www.parker.com/pneumatics

Behavior Control

The regulation speed of the pressure regulator can be modified by means of one parameter. (P 20)

The value in this parameter has a range from 0-5. A higher value indicates slower regulation speed, but will be more stable.

Parameter Number 20 – Set Behavior Control

Step	1	2	3	4	5	
Press	acc 3-6 seconds	▼ or ▲	acc	▼ or ▲	acc	
Until Display Reads	Pxx	P20	003.	###. Flashing Decimal (value between 0 and 5)	### Flashing	P21
Description	Accesses changeable parameters.	Accesses parameter no. 20.	Displays current parameter value.	Edits parameter 0 = custom set* 1 = fastest (narrow proportional band) 2 = fast 3 = normal 4 = slow 5 = slowest (proportional band is broad)	Accepts and saves new parameter setting.	Sequences to next parameter.

* When the value 0 is entered, you are able to create your own custom settings true parameters 12, 13 and 21.

Fine Settings

Set Proportional Band

Proportional band is used for setting the reaction sensitivity of the regulator. The displayed value is X 10 mbar and has a range between 50 (0.5 bar) and 250 (2.5 bar).

Parameter Number 12 – Set Proportional Band (P20 Must be Set to 0)

Step	1	2	3	4	5	
Press	acc 3-6 seconds	▼ or ▲	acc	▼ or ▲	acc	
Until Display Reads	Pxx	P12	100. Flashing Decimal	###. Flashing Decimal (value between 50 and 250)	### Flashing	P13
Description	Accesses changeable parameters.	Accesses parameter no. 12.	Displays current parameter value. Incremental value is: x 10 mbar	Edits parameter.	Accepts and saves new parameter setting.	Sequences to next parameter.

Parker Hannifin Corporation
Pneumatic Division
Richland, Michigan
www.parker.com/pneumatics

Set Deadband

Deadband is the Minimum limit of accuracy at which the regulator is set for normal operation. The displayed value is X 10 mbar and has a range between 4 (40 mbar) and 40 (400 mbar).

Parameter Number 13 – Set Deadband (P20 Must be Set to 0)

Step	1	2	3	4	5	
Press	acc 3-6 seconds	▼ or ▲	acc	▼ or ▲	acc	
Until Display Reads	Pxx	P 13	015. Flashing Decimal	###. Flashing Decimal (value between 4 and 40)	### Flashing	P 14
Description	Accesses changeable parameters.	Accesses parameter no. 13.	Displays current parameter value. Incremental value is x 10 mbar	Edits parameter.	Accepts and saves new parameter setting.	Sequences to next parameter.

Proportional Effect

Parameter Number 21 – Set Proportional Effect (P20 Must be Set to 0)

Step	1	2	3	4	5	
Press	acc 3-6 seconds	▼ or ▲	acc	▼ or ▲	acc	
Until Display Reads	Pxx	P21	010. Flashing Decimal	###. Flashing Decimal (value between 5 and 100)	### Flashing	P22
Description	Accesses changeable parameters.	Accesses parameter no. 21.	Displays current parameter value.	Edits parameter. 5 = fastest regulation 100 = slowest regulation.	Accepts and saves new parameter setting.	Sequences to next parameter.

Parameter Number 39 – Displays Current Software Version

Step	1	2	3	
Press	acc 3-6 seconds	▼ or ▲	acc	
Until Display Reads	Pxx	P39	### Flashing Decimal	
Description	Accesses changeable parameters.	Accesses parameter no. 39.	Displays current parameter value. XXX = current software version	

Parker Hannifin Corporation
Pneumatic Division
Richland, Michigan
www.parker.com/pneumatics

P31P

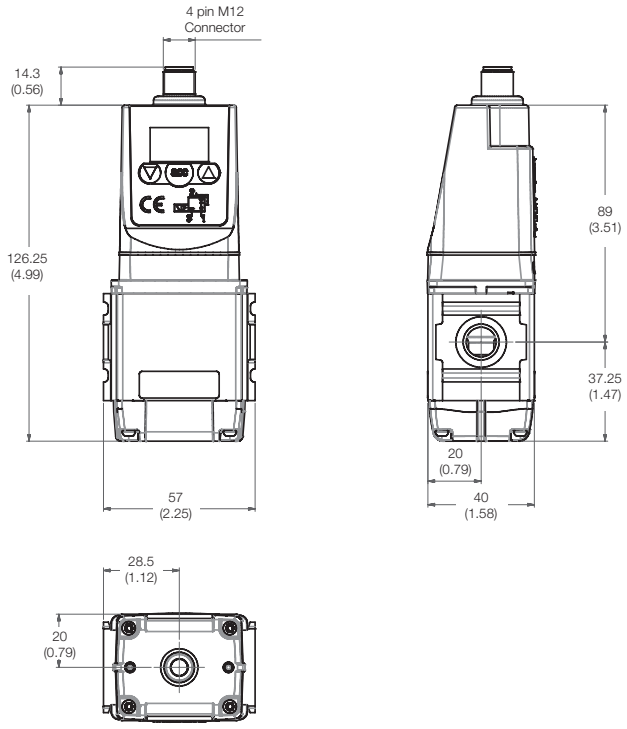

P32P

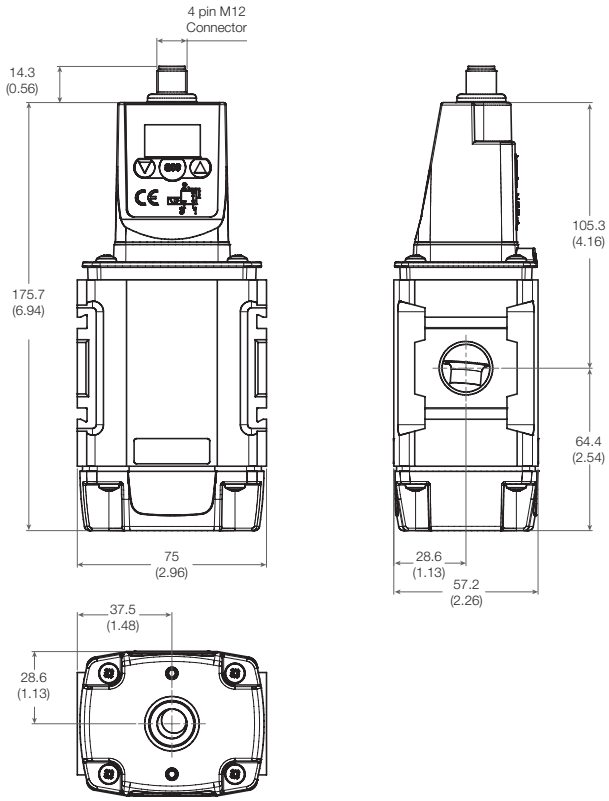

L-Bracket

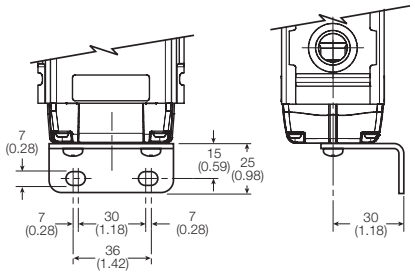

L-Bracket

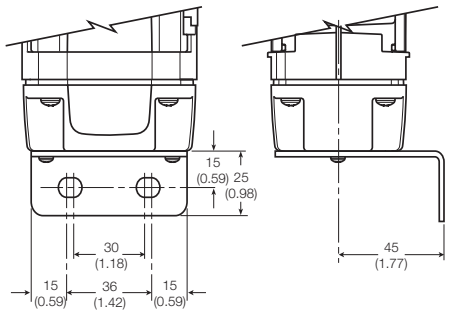

Foot Bracket

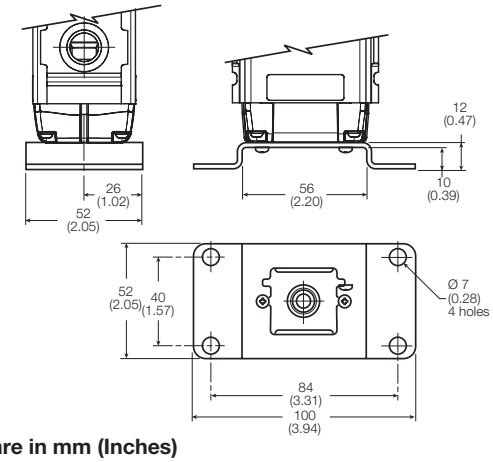

Foot Bracket

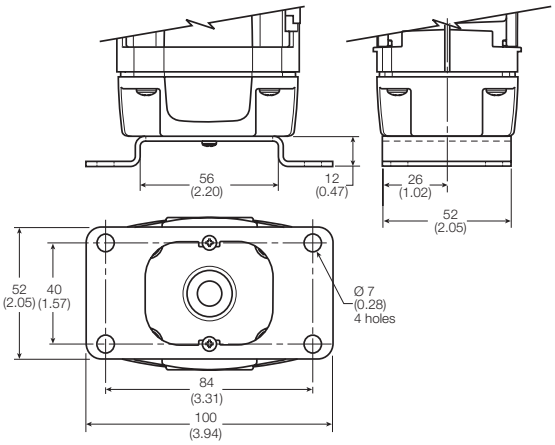

Dimensions are in mm (Inches)

Parker Hannifin Corporation
Pneumatic Division
Richland, Michigan
www.parker.com/pneumatics

Combined Soft Start / Dump Valve

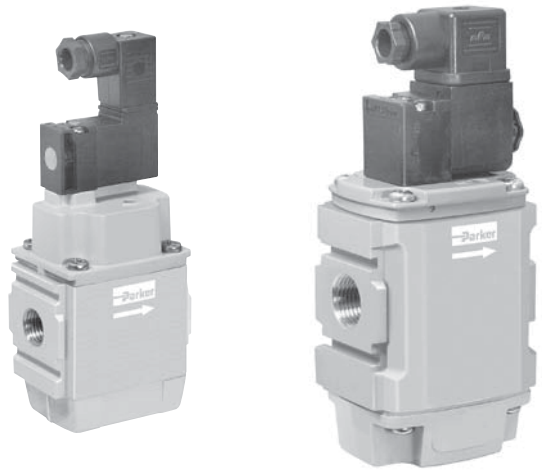

Symbol

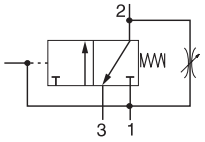

Features

- Modular design with 1/4" or 1/2" integral ports (NPT, BSPP & BSPT)
- Provides for the safe introduction of pressure
- The 3-way, 2-position function automatically dumps downstream pressure on the loss of pilot signal
- Adjustable slow start
- Solenoid or air pilot options
- High flow & exhaust capability
- Silencer included

Parker Global Series Combined Soft Start / Dump Valves, provide for the safe introduction of pressure to machines or systems. Soft Start / Dump Valves when set, allow the pressure to gradually build to the set point before fully opening to deliver full flow at line pressure.

The controlled introduction of pressure can be an important safety factor and prevent damage to tooling when air pressure is introduced at machine or system start up.

To maintain these units in the open position a pilot supply to the air pilot operated version or an electrical signal to the solenoid operated version must be maintained. The valve will automatically dump when the holding signal is removed.

Ordering Information

P 3 [ ] T * [ ] [ ] [ ] [ ] N

Body size	
Mini (1/4")	1
Compact (1/2")	2

Port size	
Mini (1/4")	2
Compact (1/2")	4

Pilot type	
External Air Pilot	P
Solenoid Pilot	S

Thread Type	
BSPP (G)	1
BSPT	2
NPT	9

Actuator interface	
15mm solenoid (P31 only)	G
30mm solenoid	C
Threaded air pilot	P

Solenoid type only

15mm (P31 series only)	C
30mm CNOMO coil	A
30mm CNOMO coil (M12 connection)	D

24VDC non locking manual overide	2CN
120VAC non locking manual overide	3GN
120VAC non locking manual override (P31 series only)	1FN

Note:
P32 unit used for both P32 & P33 series

*** Engineering Level will be entered at factory.**

Port size	Description	Order Code	Flow dm^3/s (scfm)	Max. bar (psig)	Height mm (inches)	Width mm (inches)	Depth mm (inches)	Weight
1/4"	120VAC Solenoid & cable plug	**P31T*92SGNC1FN**	17 (36)	10 (150)	115.6 (4.5)	57 (2.2)	40 (1.5)	0.37kg (0.8lbs)
1/4"	24VDC Solenoid & cable plug	**P31T*92SGNC2CN**	17 (36)	10 (150)	166* (6.5)	57 (2.2)	40 (1.5)	0.41kg (0.9lbs)
1/4"	External air pilot operated	**P31T*92PPN**	17 (36)	17 (250)	115.6 (4.5)	57 (2.2)	40 (1.5)	0.37kg (0.8lbs)
1/2"	120VAC 30mm coil & cable plug incl.	**P32T*94SCNA3GN**	46 (97)	10 (150)	162.5* (6.3)	88 (3.4)	57.2 (2.2)	0.87kg (1.9lbs)
1/2"	24VDC 30mm coil & cable plug incl.	**P32T*94SCNA2CN**	46 (97)	10 (150)	227.5* (8.9)	88 (3.4)	57.2 (2.2)	0.91kg (2.0lbs)
1/2"	External air pilot operated	**P32T*94PPN**	46 (97)	17 (250)	162.5*(6.3)	75 (2.9)	57.2 (2.2)	0.87kg (1.9lbs)

* Includes exhaust silencer. Flow with 6.3 bar (91.3) psig) inlet and 1 bar (14.5 psig) pressure drop.

Parker Hannifin Corporation
Pneumatic Division
Richland, Michigan
www.parker.com/pneumatics

Technical Information

Fluid:		Compressed air
Max. pressure Solenoid operated:		10 bar (150 psig)
Max. pressure Air Pilot operated:		17 bar (250 psig)
Min. operating pressure:		3 bar (44 psig)
Temperature Max.* Solenoid operated:		-10°C to 50°C (14°F to 122°F)
Temperature Max.* Air Pilot operated:		-20°C to 80°C (-4°F to 176°F)
Air Pilot port:		1/8"
Exhaust port:		**P31T** - 1/4" / **P32T** - 1/2"
Typical flow with 6.3 bar inlet pressure and 1 bar pressure drop:	**P31T** **P32T**	17 dm^3/s (36 scfm) 48 dm^3/s (101 scfm)

* Air supply must be dry enough to avoid ice formation at temperatures below +2°C
Snap pressure: Full flow when downstream pressure reaches 50% of the inlet pressure

Material Specification

Body:	Aluminum
Body cover:	Polyester
Seals:	Nitrile NBR

Mounting Brackets

Description	Order code **P31T**	Order code **P32T**
L-Bracket mounting kit	**P3HKA00ML**	**P3KKA00ML**
Foot bracket mounting kit	**P3HKA00MC**	**P3KKA00MC**

Note:
For solenoid operators and cable plugs (connectors) see pages B68 to B69.

Flow characteristics

1/4 Soft Start & Dump Valve

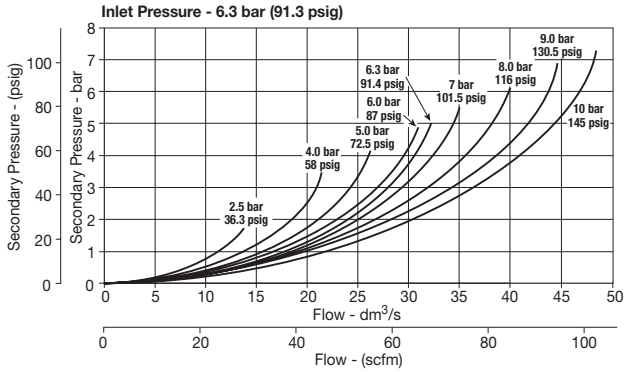

1/2 Soft Start & Dump Valve

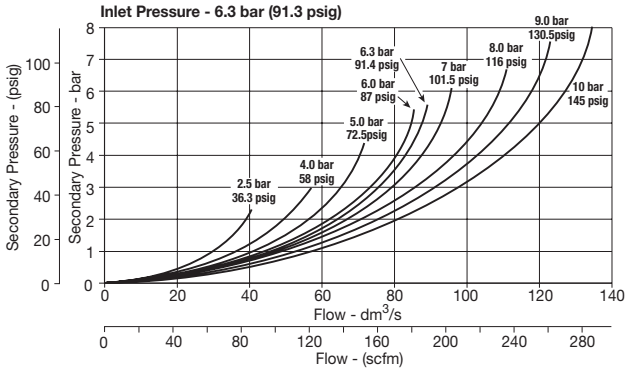

Dimensions
mm (inches)

P31T

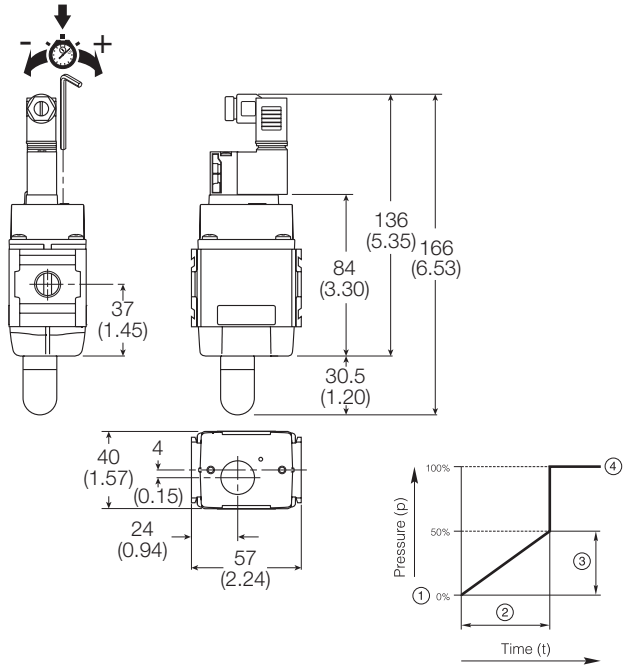

P32T

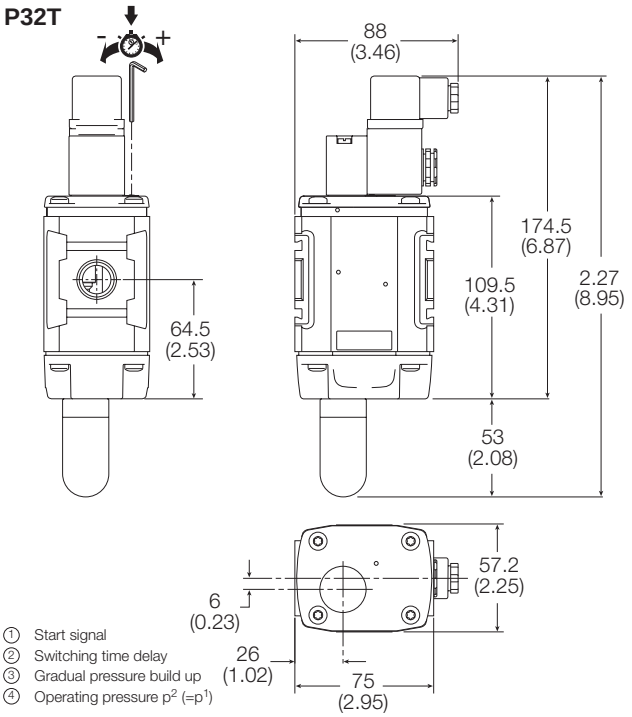

① Start signal
② Switching time delay
③ Gradual pressure build up
④ Operating pressure p^2 (=p^1)

Parker Hannifin Corporation
Pneumatic Division
Richland, Michigan
www.parker.com/pneumatics

Dump Valves

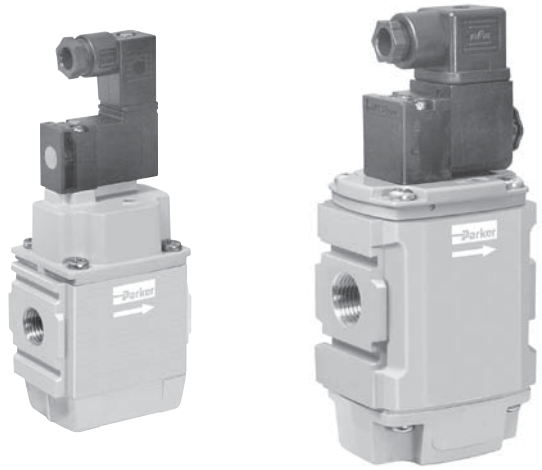

Symbol

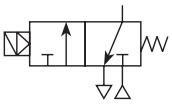

Features

- Modular design with 1/4" or 1/2" integral ports (NPT, BSPP & BSPT)
- Provides for the safe introduction of pressure
- The 3-way, 2-position function automatically dumps downstream pressure on the loss of pilot signal
- Solenoid or air pilot options
- High flow & exhaust capability
- Silencer included

Remotely operated dump valves automatically shut off upstream pressure and exhaust the downstream pressure when the pilot pressure is released.

To maintain these units in the open position a pilot supply to the air pilot operated version or an electrical signal to the solenoid operated version must be maintained. The valve will automatically dump when the holding signal is removed.

Ordering Information

P 3 [ ] D * [ ] [ ] [ ] [ ] N

Body size	
Mini (1/4")	1
Compact (1/2")	2

Port size	
Mini (1/4")	2
Compact (1/2")	4

Pilot type	
External Air Pilot	P
Solenoid Pilot	S

Thread Type	
BSPP (G)	1
BSPT	2
NPT	9

Actuator interface	
15mm solenoid (P31 only)	G
30mm solenoid	C
Threaded air pilot	P

Solenoid type only

15mm (P31 series only)	C
30mm CNOMO coil	A
30mm CNOMO coil (M12 connection)	D

24VDC non locking manual overide	2CN
120VAC non locking manual overide	3GN
120VAC non locking manual override (P31 series only)	1FN

Note:
P32 unit used for both P32 & P33 series
*** Engineering Level will be entered at factory.**

Port size	Description	Order Code	Flow dm^3/s (scfm)	Max. bar (psig)	Height mm (inches)	Width mm (inches)	Depth mm (inches)	Weight
1/4"	120VAC Solenoid & cable plug	**P31D*92SGNC1FN**	17 (36)	10 (150)	115.6 (4.5)	57 (2.2)	40 (1.5)	0.37kg (0.8lbs)
1/4"	24VDC Solenoid & cable plug	**P31D*92SGNC2CN**	17 (36)	10 (150)	166* (6.5)	57 (2.2)	40 (1.5)	0.41kg (0.9lbs)
1/4"	External air pilot operated	**P31D*92PPN**	17 (36)	17 (250)	115.6 (4.5)	57 (2.2)	40 (1.5)	0.37kg (0.8lbs)
1/2"	120VAC 30mm coil & cable plug incl.	**P32D*94SCNA3GN**	51 (108)	10 (150)	162.5* (6.3)	75 (2.9)	57.2 (2.2)	0.69kg (1.5lbs)
1/2"	24VDC 30mm coil & cable plug incl.	**P32D*94SCNA2CN**	51 (108)	10 (150)	227.5* (8.9)	75 (2.9)	57.2 (2.2)	0.91kg (2.0lbs)
1/2"	External air pilot operated	**P32D*94PPN**	51 (108)	17 (250)	162.5*(6.3)	75 (2.9)	57.2 (2.2)	0.87kg (1.9lbs)

* Includes exhaust silencer.

Parker Hannifin Corporation
Pneumatic Division
Richland, Michigan
www.parker.com/pneumatics

Technical Information

Fluid:		Compressed air
Max. pressure Solenoid operated:		10 bar (150 psig)
Max. pressure Air Pilot operated:		17 bar (250 psig)
Min. operating pressure:		3 bar (44 psig)
Temperature Max.* Solenoid operated:		-10°C to 50°C (14°F to 122°F)
Temperature Max.* Air Pilot operated:		-20°C to 80°C (-4°F to 176°F)
Air Pilot port:		1/8"
Exhaust port:		**P31D** - 1/4" / **P32D** - 1/2"
Typical flow with 6.3 bar inlet pressure and 1 bar pressure drop:	**P31D** **P32D**	17 dm^3/s (36 scfm) 51 dm^3/s (108 scfm)

* Air supply must be dry enough to avoid ice formation at temperatures below +2˚C
Snap pressure: Full flow when downstream pressure reaches 50% of the inlet pressure

Material Specification

Body:	Aluminum
Body cover:	Polyester
Seals:	Nitrile NBR

Mounting Brackets

Description	Order code **P31D**	Order code **P32D**
L-Bracket mounting kit	**P3HKA00ML**	**P3KKA00ML**
Foot bracket mounting kit	**P3HKA00MC**	**P3KKA00MC**

Note:
For solenoid operators and cable plugs (connectors) see pages B68 to B69.

Flow characteristics

1/4 Remote Dump Valve

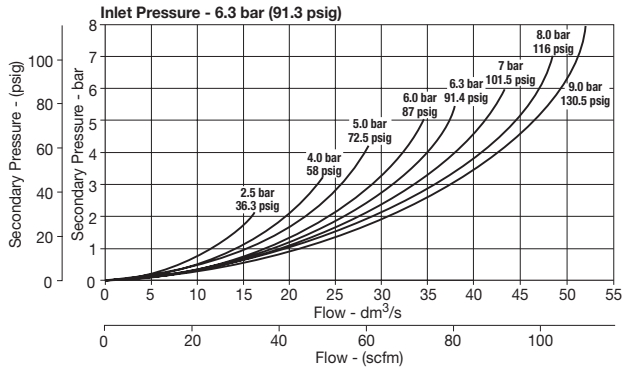

1/2 Remote Dump Valve

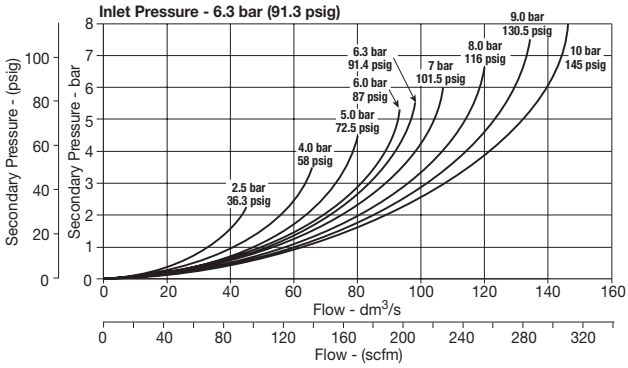

Dimensions
mm (inches)

P31D

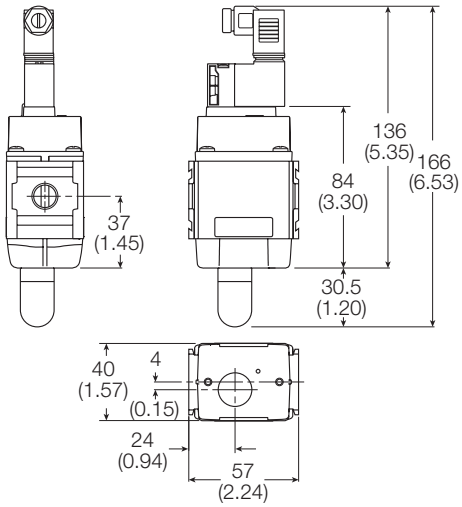

P32D

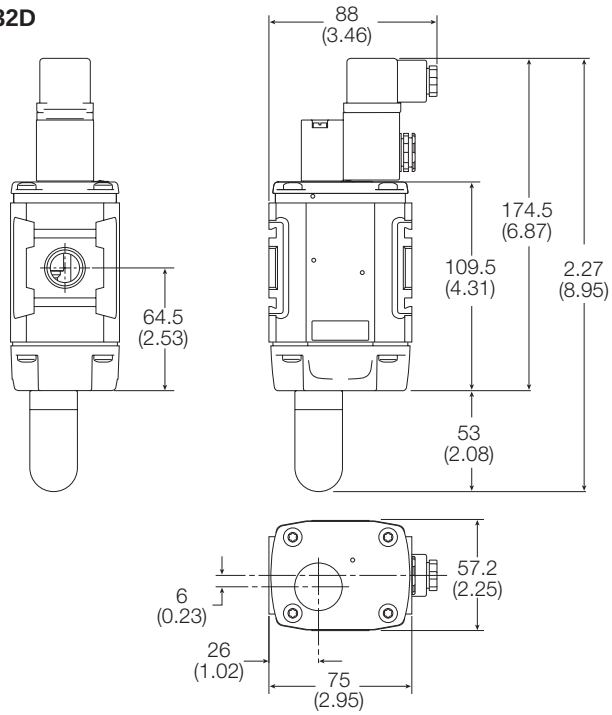

Parker Hannifin Corporation
Pneumatic Division
Richland, Michigan
www.parker.com/pneumatics

Soft Start Valve

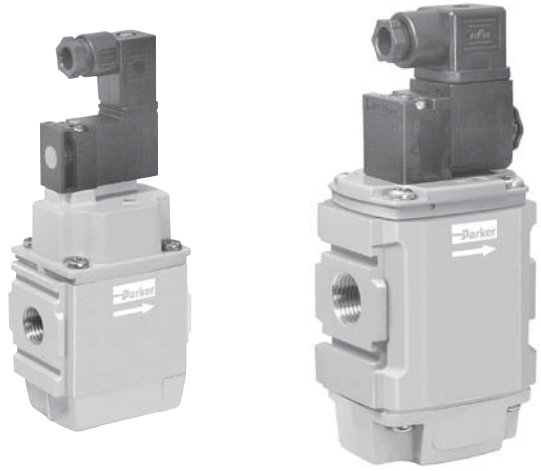

Symbol

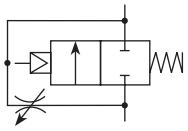

Features

- Modular design with 1/4" or 1/2" integral ports (NPT, BSPP & BSPT)
- The 2-way, 2-position function provides for the safe introduction of pressurel
- Adjustable slow start
- Solenoid or air pilot options
- High flow

Parker Global Series Soft Start Valves, provide for the safe introduction of pressure to machines or systems. Soft Start Valves, allow the pressure to gradually build to the set point before fully opening to deliver full flow at line pressure.

The controlled introduction of pressure can be an important safety factor and prevent damage to tooling when air pressure is introduced at machine or system start up.

Note: Soft Start Valves must be installed downstream of a 3/2 valve with exhaust capability

Ordering Information

P 3 [ ] **S *** [ ] [ ] [ ] [ ] **N** [ ] [ ] [ ] [ ]

Body size	
Mini (1/4")	1
Compact (1/2")	2

Thread Type	
BSPP (G)	1
BSPT	2
NPT	9

Port size	
Mini (1/4")	2
Compact (1/2")	4

Pilot type	
External Air Pilot	P
Solenoid Pilot	S
Internal Air Pilot	Y

Actuator interface	
Internal Pilot	0
15mm solenoid (P31 only)	G
30mm solenoid	C
Threaded air pilot	P

Solenoid type only

15mm (P31 series only)	C
30mm CNOMO coil	A
30mm CNOMO coil (M12 connection)	D

24VDC non locking manual overide	2CN
120VAC non locking manual overide	3GN
120VAC non locking manual override (P31 series only)	1FN

Note:
P32 unit used for both P32 & P33 series

*** Engineering Level will be entered at factory.**

Port size	Description	Order Code	Flow dm^3/s (scfm)	Max. bar (psig)	Height mm (inches)	Width mm (inches)	Depth mm (inches)	Weight
1/4"	120VAC Solenoid & cable plug	**P31S*92SGNC1FN**	17 (36)	10 (150)	115.6 (4.5)	57 (2.2)	40 (1.5)	0.37kg (0.8lbs)
1/4"	24VDC Solenoid & cable plug	**P31S*92SGNC2CN**	17 (36)	10 (150)	166.0 (6.5)	57 (2.2)	40 (1.5)	0.41kg (0.9lbs)
1/4"	Internal air pilot operated	**P31S*92Y0N**	17 (36)	17 (250)	115.6 (4.5)	57 (2.2)	40 (1.5)	0.37kg (0.8lbs)
1/4"	External air pilot (1/8" threaded)	**P31S*92PPN**	17 (36)	17 (250)	115.6 (4.5)	57 (2.2)	40 (1.5)	0.37kg (0.8lbs)
1/2"	120VAC 30mm coil & cable plug incl.	**P32S*94SCNA3GN**	48 (101)	10 (150)	162.5 (6.3)	88 (3.4)	57.2 (2.28)	0.87kg (1.5lbs)
1/2"	24VDC 30mm coil & cable plug	**P32S*94SCNA2CN**	48 (101)	10 (150)	227.5 (8.9)	88 (3.4)	57.2 (2.28)	0.90kg (2.0lbs)
1/2"	Internal air pilot operated	**P32S*94Y0N**	48 (101)	17 (250)	162.5 (6.3)	75 (2.9)	57.2 (2.28)	0.90kg (2.0lbs)
1/2"	External air pilot (1/8 threaded)	**P32S*94PPN**	48 (101)	17 (250)	162.5 (6.3)	75 (2.9)	57.2 (2.28)	0.87kg (1.5lbs)

Parker Hannifin Corporation
Pneumatic Division
Richland, Michigan
www.parker.com/pneumatics

Technical Information

Fluid:		Compressed air
Max. pressure Solenoid operated:		10 bar (150 psig)
Max. pressure Air Pilot operated:		17 bar (250 psig)
Min. operating pressure:		3 bar (44 psig)
Temperature Max.* Solenoid operated:		-10°C to 50°C (14°F to 122°F)
Temperature Max.* Air Pilot operated:		-20°C to 80°C (-4°F to 176°F)
Air Pilot port:		1/8"
Typical flow with 6.3bar inlet pressure and 1 bar pressure drop:	**P31S**	17 dm^3/s (36 scfm)
	P32S	48 dm^3/s (101 scfm)

* Air supply must be dry enough to avoid ice formation at temperatures below +2˚C
Snap pressure: Full flow when downstream pressure reaches 50% of the inlet pressure

Material Specification

Body:	Aluminum
Body cover:	Polyester
Seals:	Nitrile NBR

Mounting Brackets

Description	Order code **P31S**	Order code **P32S**
L-Bracket mounting kit	**P3HKA00ML**	**P3KKA00ML**
Foot bracket mounting kit	**P3HKA00MC**	**P3KKA00MC**

Note:
For solenoid operators and cable plugs (connectors) see pages B68 to B69.

Flow characteristics

1/4 Soft Start Valve

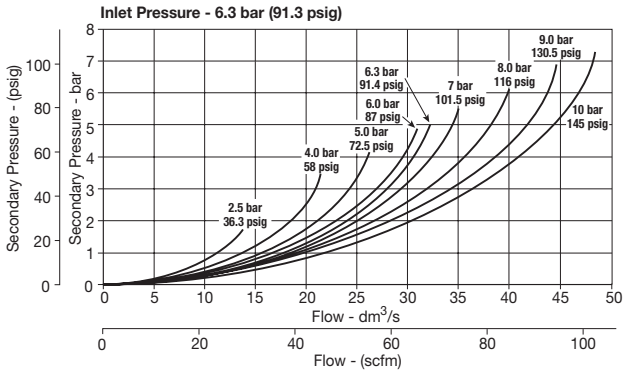

1/2 Soft Start Valve

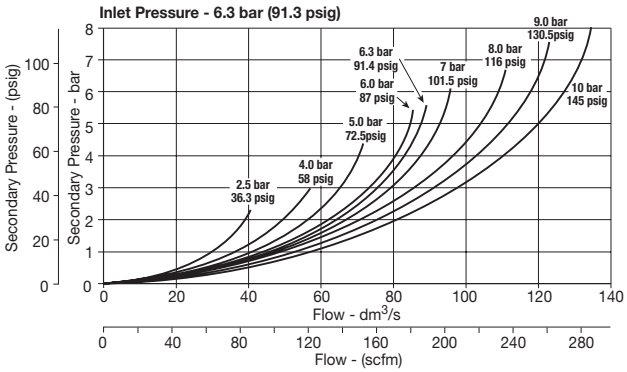

Dimensions
mm (inches)

P31S

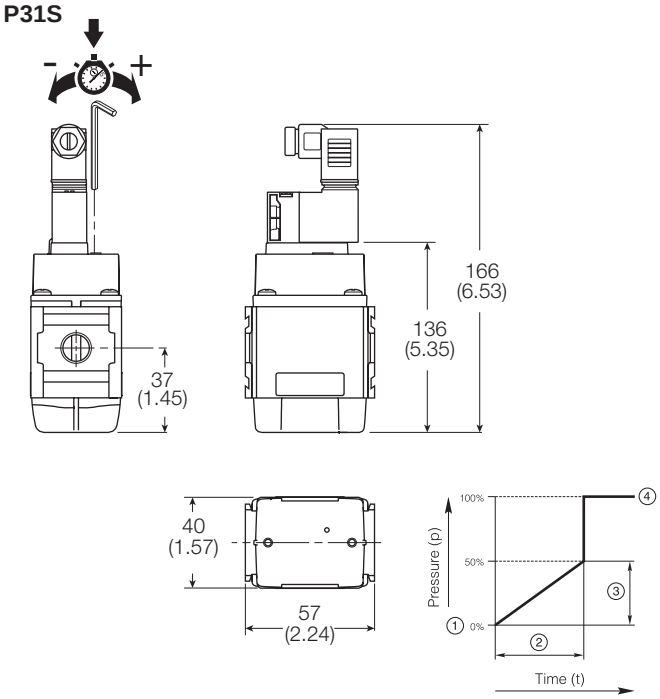

P32S

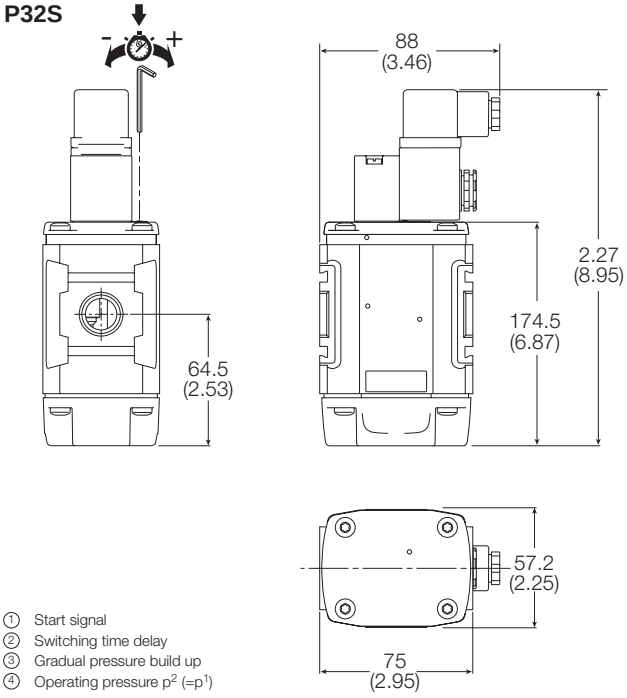

① Start signal
② Switching time delay
③ Gradual pressure build up
④ Operating pressure p^2 (=p^1)

Parker Hannifin Corporation
Pneumatic Division
Richland, Michigan
www.parker.com/pneumatics

Solenoid Operators

Solenoid operator - CNOMO

Technical data - Solenoid operators, coil combinations

	NC Normal Operator with 15mm standard coil	**NC Normal Operator** with 22 x 30 standard coil	**NC Normal Operator** with 30 x 30 standard coil
Working pressure	0 to10 bar	0 to 10 bar	0 to10 bar
Ambient temperature	-15°C to 60°C *	-10°C to 60°C *	-10°C to 60°C *
Power (DC)	1.2W	4.8W	2.7W
Power (AC)	1.6VA	8.5VA	4.9VA
Voltage tolerance	+10%/-15%	+/-10%	+/-10%
Duty cycle	100%	100%	100%
Insulation class	F	F	F
Electric connection	Form C	Industrial B	Form A
Protection	IP65	IP65	IP65
Approval	UL/CSA		UL/CSA
Working media	All neutral media such as compressed air and inert gases.		

* limited to 50°C if use with 100% duty cycle

Transients

Interrupting the current through the solenoid coil produces momentary voltage peaks which, under unfavourable conditions, can amount to several hundred times the rated operating voltage. Normally, these transients do not cause problems, but to achieve the Maximum life of relays in the circuit (and particularly of transistors, thyristors and integrated circuits) it is desirable to provide protection by means of voltage-dependent resistors (varistors). All connectors/ cable plugs EN175301-803 with LED's include this type of circuit protection.

Materials

Pilot Valve	
Body:	Polyamide
Armature tube:	Brass
Plunger & core:	Corrosion resistant Cr-Ni steel
Seals:	Fluorocarbon
Screws:	Stainless steel
Coil	
Encapsualtion material:	Thermoplastic as standard Duroplast for M12 connection

P31 Series - Solenoid coils 15mm NC

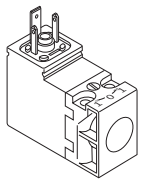

Voltage	Order code Override, blue, non locking flush	Weight (Kg)
24VDC	**PS2982B49P**	0.038
115VAC 50Hz / 120VAC 60Hz	**PS2982B53P**	0.038

Spare solenoid operators

Base Solenoid pilot operator CNOMO NC

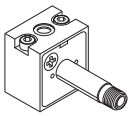

Description	Order code Non-lock manual override	Weight (Kg)
Standard Duty	**P2FP23N4B**	0.065
No Override	**P2FP23N4A**	0.065

Note: Solenoid pilot operators are fitted to the Global range. Order the above part numbers for spares. The operators are supplied with mounting screws and interface O-rings.
Coils and connectors must be ordered separately.

Solenoid coils with M12 connection

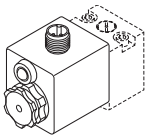

Voltage	Order code Form A 30 x 30	Weight (Kg)
Direct current		
24VDC	**P2FC6449**	0.065

Solenoid coils with Din A or Industrial B connection

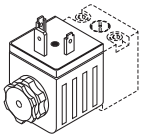

Voltage	22mm x 30mm Order code Industrial B Standard	Weight (Kg)	30mm x 30mm Order code DIN A Standard	Weight (Kg)
Direct current				
24VDC	**P2FCB449**	0.093	**P2FCA449**	0.105
Alternative current				
110V 50Hz, 120V 60Hz	**P2FCB453**	0.093	**P2FCA453**	0.105

Parker Hannifin Corporation
Pneumatic Division
Richland, Michigan
www.parker.com/pneumatics

Solenoid Operators

Solenoid connectors / Cable plugs EN175301-803

	Description	Order code 15mm Form C ISO15217	Order code 22mm Form B Industrial	Order code 30mm Form A ISO4400
With standard screw 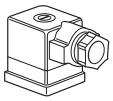	Standard IP65 without flying lead	PS2932BP	PS2429BP	PS2028BP
	With LED and protection 24VAC/DC	PS294679BP	PS243079BP	PS203279BP
	With LED and protection 110VAC	PS294683BP	PS243083BP	PS203283BP
With cable 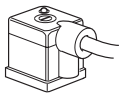	Standard with 2m cable IP65	PS2932JBP	PS2429JBP	PS2028JBP
	24VAC/DC, 2m cable LED and protection IP65	PS2946J79BP	PS2430J79BP	PS2032J79BP
	110VAC/DC, 2m cable LED and protection IP65	PS2946J83BP	PS2430J83BP	PS2032J83BP

Solenoid coil dimensions mm (inches)

15mm

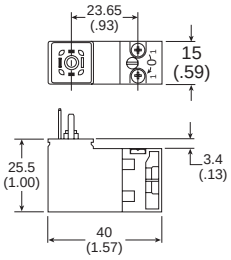

22 x 30mm

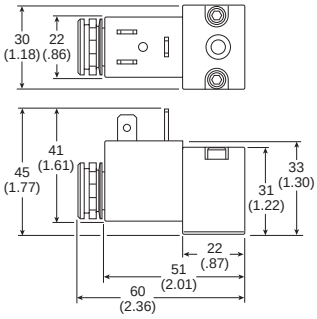

30 x 30mm

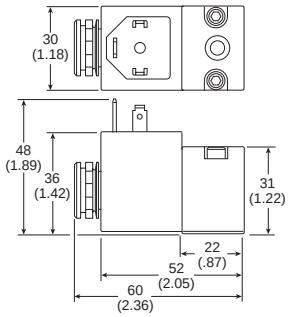

Electrical schematics

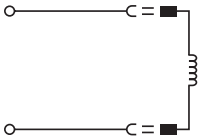

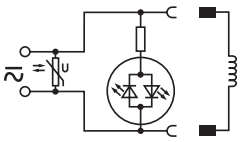

PS2028BP	PS243079BP	PS203279BP
PS2028JBP	PS2430J79BP	PS2032J79BP
PS2429BP	PS243083BP	PS293283BP
PS2429JBP	PS2430J83BP	PS2932J83BP
PS2932BP	PS294679BP	PS294683BP
PS2932JBP	PS2946J79BP	PS2946J83BP

Cable plug dimensions mm (inches)

15mm Form C Cable plugs

PS2932BP
PS294679BP

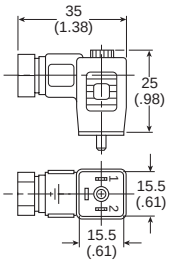

22mm Form B Cable plugs

PS2429BP

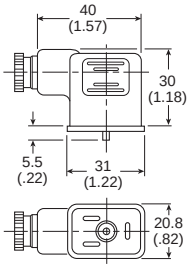

30mm Form A Cable plugs

PS2028BP

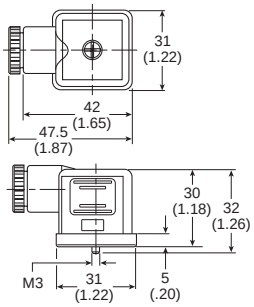

Parker Hannifin Corporation
Pneumatic Division
Richland, Michigan
www.parker.com/pneumatics

Safety Lockout Valves

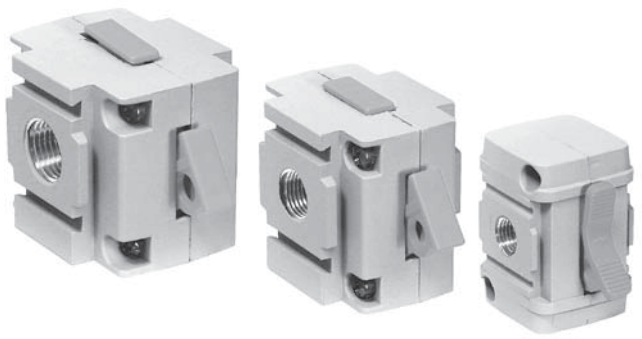

Symbol

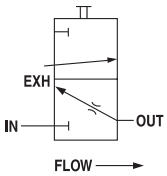

Features

- The Safety Lockout valve is a manually operated, slide-type, 2-position, 3-way valve. In the closed position, downstream air pressure is exhausted to atmosphere.
- The valve slide can be locked in the closed position with a customer supplied padlock.
- The Safety Lockout valves conform to OSHA #29 CFR part 1910 – control of hazardous energy source (lockout / tagout).
- Left to right flow — orange slide
- Right to left — yellow slide

Ordering Information

Model type	Port size	Thread type	Flow dm^3/s (scfm)	Safety Lockout Valve Flow from **left to right**	Safety Lockout Valve Flow from **right to left**
P31	1/4"	NPT	47.2 (100)	**P31V*92LSAN**	**—**
P32	1/4"	NPT	66.5 (141)	**P32V*92LSAN**	**P32V*92LSBN**
	3/8"	NPT	101.9 (216)	**P32V*93LSAN**	**P32V*93LSBN**
	1/2"	NPT	128.4 (272)	**P32V*94LSAN**	**P32V*94LSBN**
P33	1/2"	NPT	136.9 (290)	**P33V*94LSAN**	**P33V*94LSBN**
	3/4"	NPT	141.6 (300)	**P33V*96LSAN**	**P33V*96LSBN**

For thread type: BSPP **1**
BSPT **2**
NPT **9**

*** Engineering Level will be entered at factory.**

Materials of Construction

Body	Zinc
Blade	Acetal
Seals	Nitrile

Specifications

Operating temperature	**P31:**	-10°C to 65.5°C (14°F to 150°F)
	P32/P33:	-25°C to 65.5°C (-13°F to 150°F)
Max. supply pressure		10 bar (150 psig)
Port size	BSPP / BSPT / NPT	1/4, 3/8, 1/2, 3/4
Weight	**P31:**	0.30 kg (0.66 lbs)
	P32:	0.34 kg (0.74 lbs)
	P33:	0.41 kg (0.90 lbs)

Dimensions
mm (inches)

P31

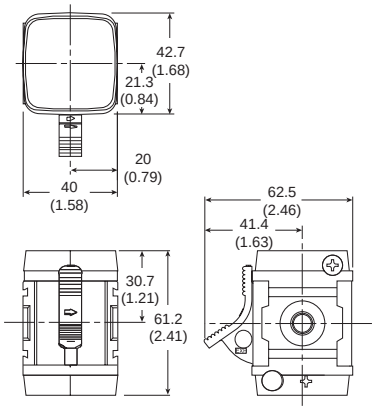

P32

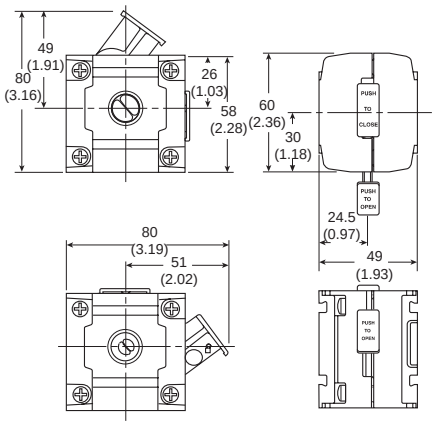

P33

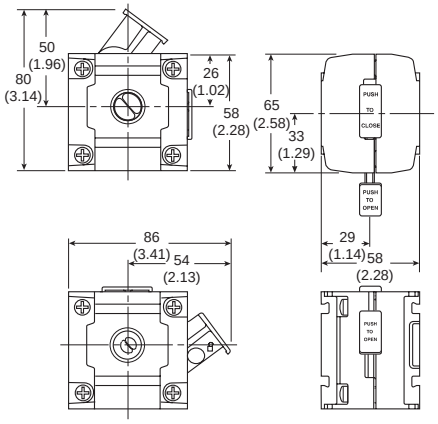

Parker Hannifin Corporation
Pneumatic Division
Richland, Michigan
www.parker.com/pneumatics

Modular Ball Valve

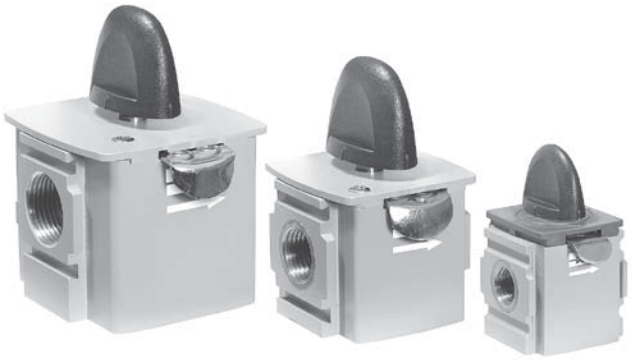

Symbol

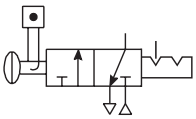

Features

The Modular Ball Valves provide shut off line pressure with a non-sticking 90° turn handle to prevent unauthorised adjustment. When the inlet pressure is turned off the downstream air pressure vents through the exhaust port. The padlock slide may be assembled on either side. It is recommended that this is assembled after mounting.

Note: This padlock slide is a permanent assembly and may not be removed later

Ordering Information

Model type	Port size	Thread type	Flow dm^3/s (scfm)	Modular Ball Valve Flow from left to right
P31	1/4"	NPT	20 (42.4)	**P31V*92LBNN**
P32	3/8"	NPT	90 (190.7)	**P32V*93LBNN**
	1/2"	NPT	122 (258.5)	**P32V*94LBNN**
P33	1/2"	NPT	265 (561.5)	**P33V*94LBNN**
	3/4"	NPT	320 (678)	**P33V*96LBNN**

*** Engineering Level will be entered at factory.**

For thread type: BSPP **1**
BSPT **2**
NPT **9**

Specifications

Operating temperature		-20°C to 80°C (-4°F to 176°F))
Max. supply pressure		17 bar (250 psig)
Port size	BSPP / BSPT / NPT	1/4, 3/8, 1/2, 3/4
Weight	**P31:**	0.19 kg (0.41 lbs)
	P32:	0.47 kg (1.00 lbs)
	P33:	0.80 kg (1.70 lbs

Materials of Construction

Body		Aluminum
Seals		PTFE
Ball	**P31**	Brass
	P32 / P33	Chrome plated brass

Dimensions

mm (inches)

P31

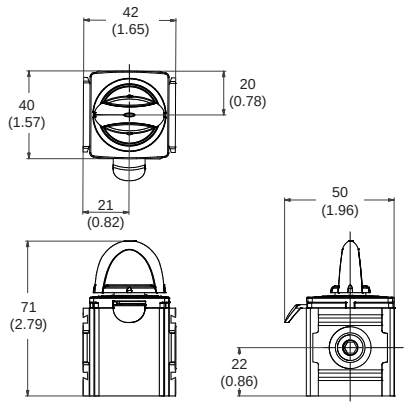

P32

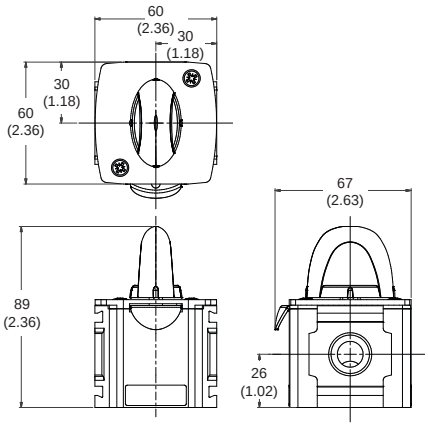

P33

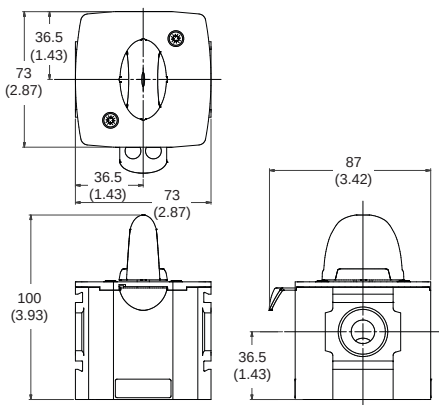

Parker Hannifin Corporation
Pneumatic Division
Richland, Michigan
www.parker.com/pneumatics

Manifold Blocks

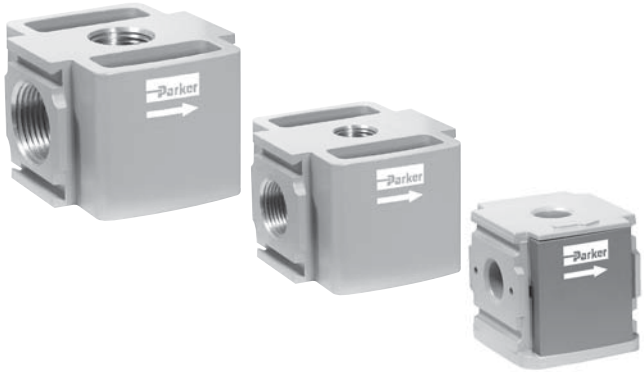

Symbols

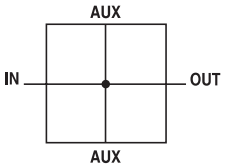

Features

- Available in 1/4" or 3/4" threaded inlet / outlet ports
- Two additional top and bottom auxiliary ports standard
- Can be mounted anywhere in the FRL system
- Includes one pipe plug

Ordering Information

Model type	In / Out port size	Auxiliary port size top	Auxilliary port size bottom	Thread type	Order Code
P31	1/4"	1/4"	1/4"	NPT	**P31M*92022N**
P32	1/2"	1/4"	1/2"	NPT	**P32M*94024N**
P33	3/4"	1/4"	1/2"	NPT	**P33M*96024N**

*** Engineering Level will be entered at factory.**

For thread type: BSPP **1**
BSPT **2**
NPT **9**

Specifications

Operating temperature		-40°C to 65.5°C (-40°F to 150°F)
Max. supply pressure		20.7 bar (300 psig)
Port size (In / Out) NPT / BSPP / BSPT / NPT	**P31:**	1/4"
	P33:	3/4"
Auxilliary port size - Top NPT / BSPP / BSPT	**P31:**	1/4"
	P33:	1/4"
Auxilliary port size - Bottom BSPP / BSPT / NPT	**P31:**	1/4"
	P33:	1/2"
Weight	**P31:**	0.19 kg (0.26 lbs)
	P33:	0.34 kg (0.42 lbs)

Materials of Construction

Body	Aluminum

Note:
P33 unit used for both P32 & P33 series

Dimensions mm (inches)

P31

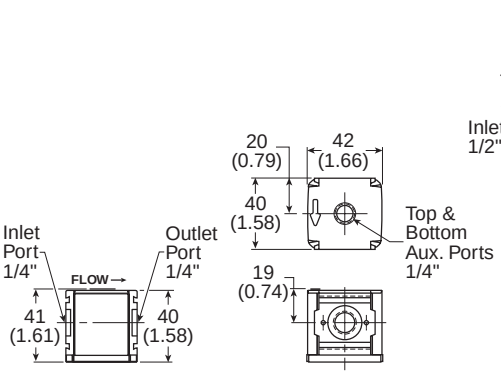

P32

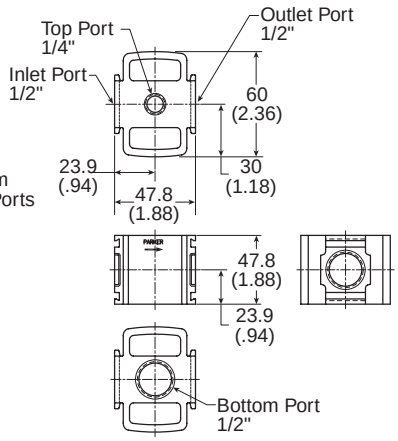

P33

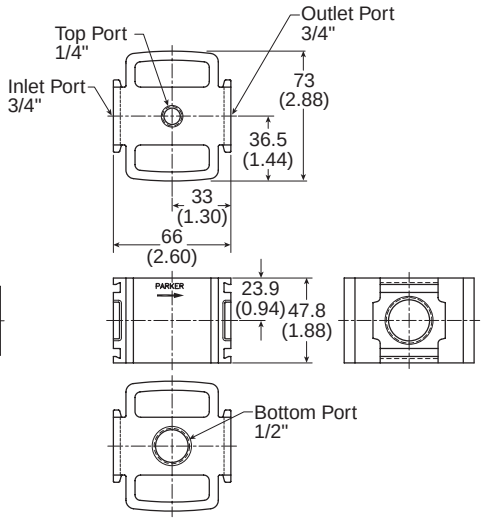

Parker Hannifin Corporation
Pneumatic Division
Richland, Michigan
www.parker.com/pneumatics

P31 Series Accessories

C-Bracket
(Fits to filter and lubricator body)

P31KA00MW

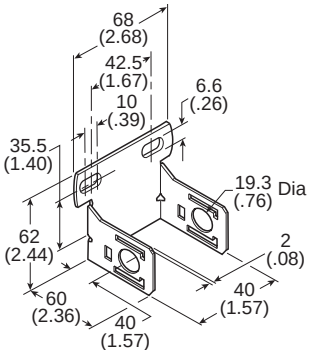

T-Bracket w/ Body Connector
(O-ring not shown)

P31KA00MT

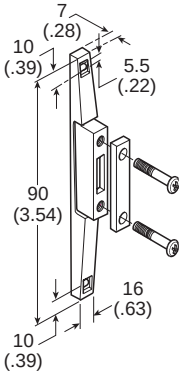

Body Connector
(O-ring not shown)

P31KA00CB

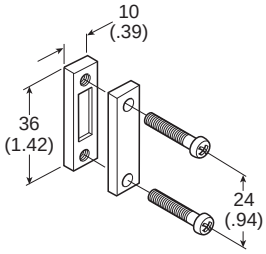

Port Block Kit
(O-ring not shown)

1/8 NPT **P31KA91CP**
1/4 NPT **P31KA92CP**
3/8 NPT **P31KA93CP**
1/8 BSPP **P31KA11CP**
1/4 BSPP **P31KA12CP**
3/8 BSPP **P31KA13CP**
1/8 BSPT **P31KA21CP**
1/4 BSPT **P31KA22CP**
3/8 BSPT **P31KA23CP**

Port Block Kit w/ T-Bracket
(O-ring not shown)

1/8 NPT **P31KA91CN**
1/4 NPT **P31KA92CN**
3/8 NPT **P31KA93CN**
1/8 BSPP **P31KA11CN**
1/4 BSPP **P31KA12CN**
3/8 BSPP **P31KA13CN**
1/8 BSPT **P31KA21CN**
1/4 BSPT **P31KA22CN**
3/8 BSPT **P31KA23CN**

Angle Bracket
(Fits to regulator and filter/regulator body)

P31KA00MR

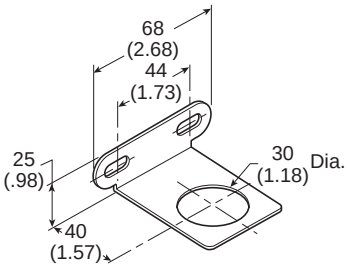

Parker Hannifin Corporation
Pneumatic Division
Richland, Michigan
www.parker.com/pneumatics

P32 Series Accessories

T-Bracket w/ Body Connector

P32KA00MT

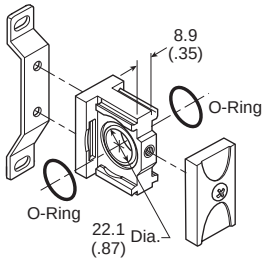

Body Connector

P32KA00CB

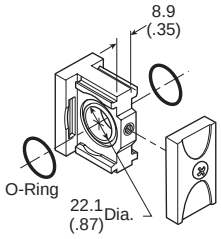

Port Block Kit

1/4 NPT	**P32KA92CP**	1/4 BSPT	**P32KA22CP**
3/8 NPT	**P32KA93CP**	3/8 BSPT	**P32KA23CP**
1/2 NPT	**P32KA94CP**	1/2 BSPT	**P32KA24CP**
3/4 NPT	**P32KA96CP**	3/4 BSPT	**P32KA26CP**
1/4 BSPP	**P32KA12CP**		
3/8 BSPP	**P32KA13CP**		
1/2 BSPP	**P32KA14CP**		
3/4 BSPP	**P32KA16CP**		

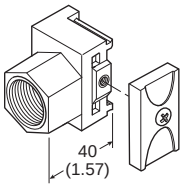

Angle Bracket

(Fits to regulator and filter/regulator bonnet)

P32KA00MR

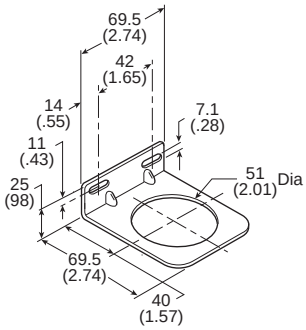

L-Bracket

(Fits to filter and lubricator body)

P32KA00ML

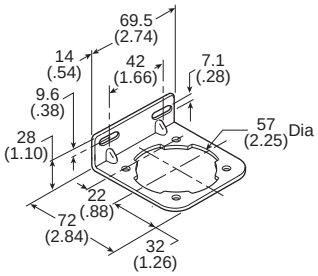

T-Bracket

(fits to body connector or port block)

P32KA00MB

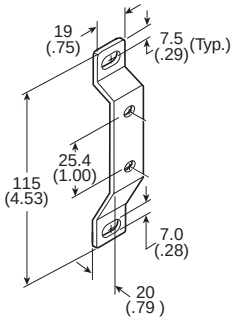

Parker Hannifin Corporation
Pneumatic Division
Richland, Michigan
www.parker.com/pneumatics

P33 Series Accessories

T-Bracket w/ Body Connector

P32KA00MT

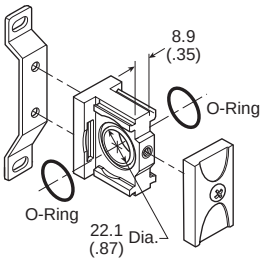

Body Connector

P32KA00CB

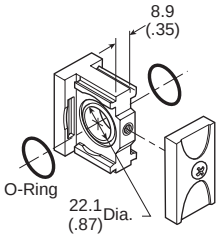

Port Block Kit

1/4 NPT **P32KA92CP**
3/8 NPT **P32KA93CP**
1/2 NPT **P32KA94CP**
3/4 NPT **P32KA96CP**
1/4 BSPP **P32KA12CP**
3/8 BSPP **P32KA13CP**
1/2 BSPP **P32KA14CP**
3/4 BSPP **P32KA16CP**

1/4 BSPT **P32KA22CP**
3/8 BSPT **P32KA23CP**
1/2 BSPT **P32KA24CP**
3/4 BSPT **P32KA26CP**

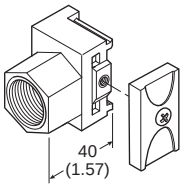

Angle Bracket

(Fits to regulator and filter/regulator bonnet)

P33KA00MR

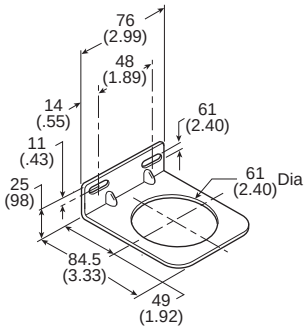

L-Bracket

(Fits to filter and lubricator body)

P33KA00ML

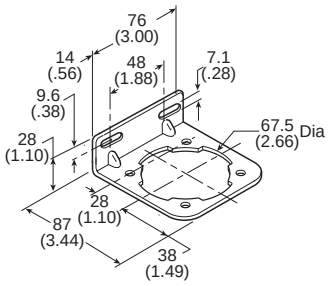

T-Bracket

(fits to body connector or port block)

P32KA00MB

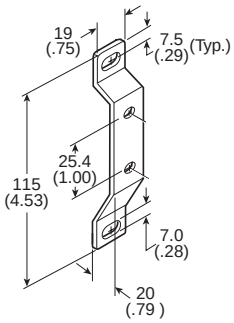

Parker Hannifin Corporation
Pneumatic Division
Richland, Michigan
www.parker.com/pneumatics

Kits

Series	Description	Order Code	
P31 P32 P33	Panel Mount Nut (Plastic)	**P31KA00MP** **P32KA00MP** **P33KA00MP**	
P31 P32 P33	Panel Mount Nut (Aluminum)	**P31KA00MM** **P32KA00MM** **P33KA00MM**	
P31 P32 P33	5µ Element Kit	**P31KA00ESE** **P32KA00ESE** **P33KA00ESE**	
P31 P32 P33	1µ Element Kit	**P31KA00ES9** **P32KA00ES9** **P33KA00ES9**	
P31 P32 P33	0.01µ Element Kit	**P31KA00ESC** **P32KA00ESC** **P33KA00ESC**	
P31 P32 P33	Adsorber Element Kit	**P31KA00ESA** **P32KA00ESA** **P33KA00ESA**	
P32 / P33	Auto Drain Kit	**P32KA00DA**	
P32 / P33	Differential Pressure Indicator Kit	**P32KA00RQ**	
P31 P32 / P33	Fill Plug Kit	**P31KA00PL** **P32KA00PL**	
P31 / P32 / P33	Drip Control Assembly Kit	**P32KA00PG**	

Parker Hannifin Corporation
Pneumatic Division
Richland, Michigan
www.parker.com/pneumatics

Kits

Series	Description	Order Code	
P31 P32 P33	Plastic Bowl w/ Bowl Guard & Manual Drain	**P31KA00BGM** **P32KA00BGM** **P33KA00BGM**	
P31	Plastic Bowl w/ Bowl Guard & Pulse Drain	**P31KA00BGB**	
P32 P33	Plastic Bowl w/ Bowl Guard & Auto Drain	**P32KA00BGA** **P33KA00BGA**	
P31 P32 P33	Metal Bowl w/o Sight Gauge & Manual Drain	**P31KA00BMM** **P32KA00BMM** **P33KA00BMM**	
P31	Metal Bowl w/o Sight Gauge & Pulse Drain	**P31KA00BMB**	
P32 P33	Metal Bowl w/o Sight Gauge & Auto Drain	**P32KA00BMA** **P33KA00BMA**	
P32 P33	Metal Bowl w/ Sight Gauge & Manual Drain	**P32KA00BSM** **P33KA00BSM**	
P32 P33	Metal Bowl w/ Sight Gauge & Auto Drain	**P32KA00BSA** **P33KA00BSA**	
P31 P32 P33	Lubricator - Plastic Bowl w/ Bowl Guard No Drain	**P31KA00BGN** **P32KA00BGN** **P33KA00BGN**	
P31 P32 P33	Lubricator - Metal Bowl w/o Sight Gauge No Drain	**P31KA00BMN** **P32KA00BMN** **P33KA00BMN**	
P32 P33	Lubricator - Metal Bowl w/ Sight Gauge No Drain	**P32KA00BSN** **P33KA00BSN**	

Parker Hannifin Corporation
Pneumatic Division
Richland, Michigan
www.parker.com/pneumatics

Kits

Series	Description	Connection		Order Code	
P31 P32 P33	Regulator - Relieving Repair Kit			**P31KA00BMN** **P32KA00BMN** **P33KA00BMN**	
P32 P33	Regulator - Non Relieving Repair Kit			**P32KA00BSN** **P33KA00BSN**	
P31 P32 P33	Regulator - Main Adjusting Spring 0-2 bar (0-30 psig) Kit			**P31KA00PR** **P32KA00PR** **P33KA00PR**	
P31 P32 P33	Regulator - Main Adjusting Spring 0-4.1 bar (0-60 psig) Kit			**P31KA00PS** **P32KA00PS** **P33KA00PS**	
P31 P32 P33	Regulator - Main Adjusting Spring 0-8.6 bar (0-125 psig) Kit			**P31KA00PT** **P32KA00PT** **P33KA00PT**	
P32 P33	Regulator - Main Adjusting Spring 0-17 bar (0-250 psig) Kit			**P32KA00PV** **P33KA00PV**	
P31	Square Flush Mounting Gauge Kit	0-4 bar 0-10 bar 0-60 psig 0-150 psig		**K4511SCR04B** **K4511SCR11B** **K4511SCR060** **K4511SCR150**	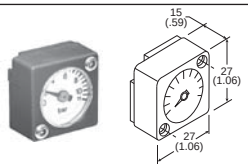
P31	1" Round Gauge	0-60 psig / 0-4.1 bar 0-160 psig / 0-10 bar	1/8" 1/8”	**K4510N18060** **K4510N18160**	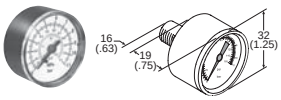
P31	40mm Round Gauge (Not for use with Common Port Regulators)	0-30 psig / 0-2 bar 0-60 psig / 0-4.1 bar 0-160 psig / 0-10 bar	1/8" 1/8" 1/8”	**K4515N18030** **K4515N18060** **K4515N18160**	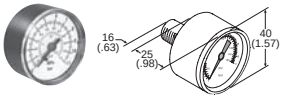
P32 / P33	50mm Round Gauge	0-30 psig / 0-2 bar 0-60 psig / 0-4.1 bar 0-160 psig / 0-10 bar 0-300 psig / 0-20 bar	1/4 1/4" 1/4" 1/4"	**K4520N14030** **K4520N14060** **K4520N14160** **K4520N14300**	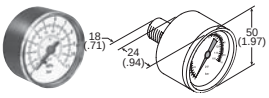
P31 P32 / P33	Body Connector O-ring (Spares kit) (Pack of 4)			**P31KA02CY** **P32KA04CY**	

Parker Hannifin Corporation
Pneumatic Division
Richland, Michigan
www.parker.com/pneumatics

Filters, Regulators, Lubricators

Mini, Prep-Air® II, General Line

Section C

www.parker.com/pneu/frl

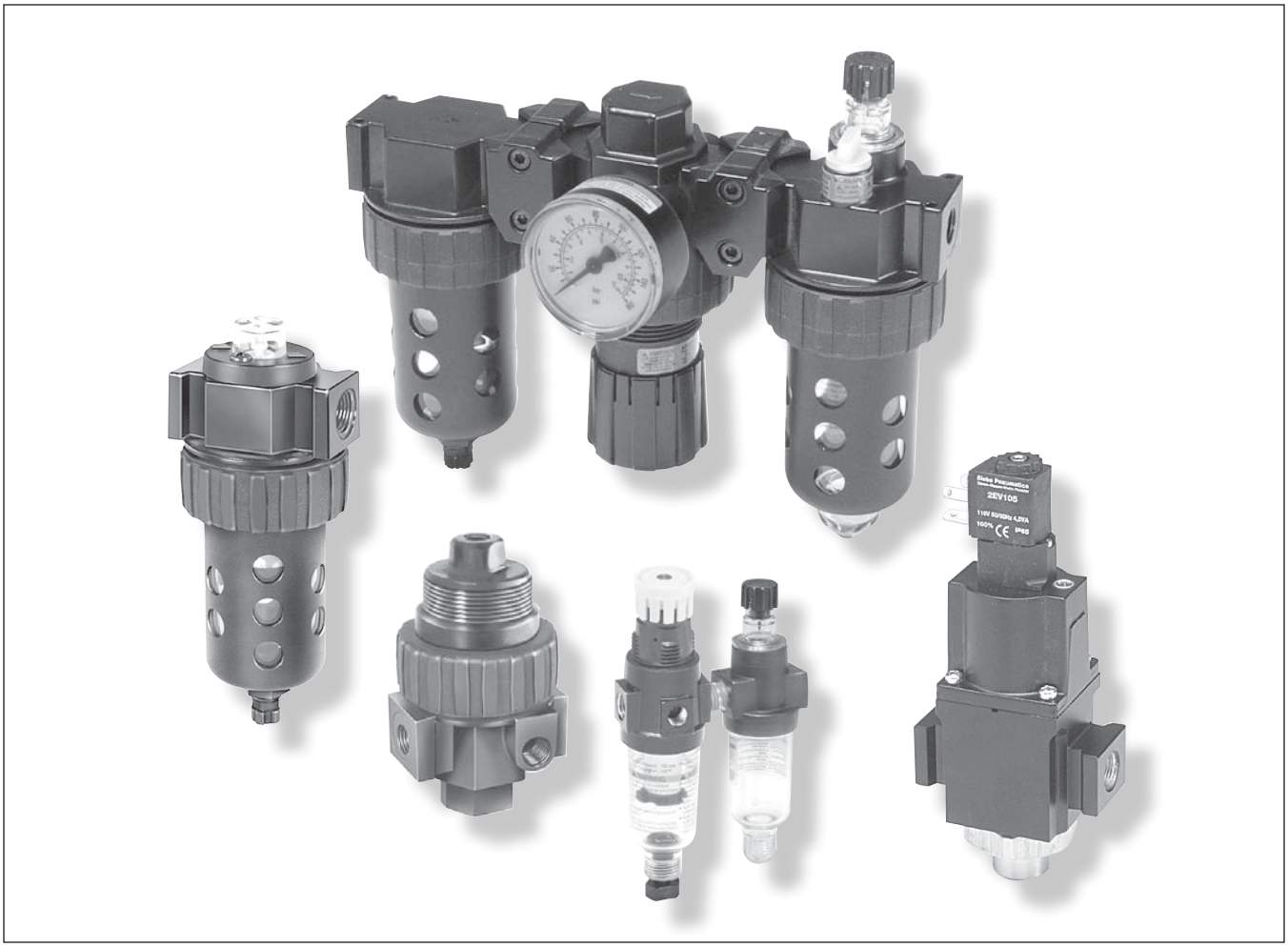

Product Selection C3-C5
Air Line Filters C6-C27
Air Line Coalescing Filters C28-C45
Bulk Liquid Separators C46-C49
Air Line Regulators.....C50-C91
Filter / Regulator “Piggybacks”.....C92-C107
Air Line Lubricators, Micro-Mist.....C108-C115
Air Line Lubricators, Mist.....C116-C134
Combinations & Accessories
14A / 14G.....C136-C137
15A / 15G / 15B / 15H.....C138-C143
06G / 16G / 06A / 16A C144-C145
07G / 17G / 07A / 17A C144-C145
06H / 16H / 06B / 16B.....C146-C147
07H / 17H / 07B / 17B.....C146-C147
06 / 07 Modular Accessories C148-C149
P3N C150-C154
C628..... C155
Air Line Accessories.....C156-C164

BOLD ITEMS ARE MOST POPULAR.

Parker Hannifin Corporation
Pneumatic Division
Richland, Michigan
www.parker.com/pneumatics

⚠ CAUTION:

Polycarbonate bowls and sight domes, being transparent and tough, are ideal for use with Filters and Lubricators. They are suitable for use in normal industrial environments, but should not be located in areas where they could be subjected to direct sunlight, an impact blow, nor temperatures outside of the rated range. As with most plastics, some chemicals can cause damage. Polycarbonate bowls and sight domes should not be exposed to chlorinated hydro-carbons, ketones, esters and certain alcohols. They should not be used in air systems where compressors are lubricated with fire-resistant fluids such as phosphate ester and di-ester types.

Metal bowls are recommended where ambient and/or media conditions are not compatible with polycarbonate bowls. Metal bowls resist the action of most such solvents, but should not be used where strong acids or bases are present or in salt laden atmospheres. Consult the factory for specific recommendations where these conditions exist.

TO CLEAN POLYCARBONATE COMPONENTS USE MILD SOAP AND WATER ONLY! DO NOT use cleansing agents such as acetone, benzene, carbon tetrachloride, gasoline, toluene, etc., which are damaging to this plastic.

Metal bowl guards are recommended for all applications.

⚠ CAUTION:

REGULATOR PRESSURE ADJUSTMENT – The working range of knob adjustment is designed to permit outlet pressures within their full range. Pressure adjustment beyond this range is also possible because the knob is not a limiting device. This is a common characteristic of most industrial regulators, and limiting devices may be obtained only by special design.

Parker Hannifin Corporation
Pneumatic Division
Richland, Michigan
www.parker.com/pneumatics

Product Selection Chart

Basic Unit	Series	Port Size											Bowls			Capacity	Elements (Micron)				Page
		1/8	1/4	3/8	1/2	3/4	1	1-1/4	1-1/2	2	2-1/2	3	Poly	Metal	Metal SG		5	20	40	Adsorber	
FILTERS	02F		X										Aluminum Body			—	Std.	—	—	—	C9
	14F	X	X										X	X	—	1 oz.	Std.	—	Opt.	Opt.	C10
	05F		X	X									X	X	X	2 oz.	Opt.	—	Std.	Opt.	C12
	06F		X	X	X								X	X	X	4.4 oz.	Opt.	—	Std.	Opt.	C14
	07F			X	X	X							X	X	X	7.2 oz.	Opt.	—	Std.	Opt.	C16
	P3NF					X	X		X				—	—	X	18 oz.	Opt.	—	Std.	Opt.	C18
	F602					X	X	X	X	X	X		—	X	X	32 oz.	Opt.	—	Std.	—	C20
	09F									X			—	Metal w/ DPI		117 oz.	Std.	—	—	—	C26
COALESCING FILTERS	02F		X										Nylon Housing			—	Grade 6, Grade 10				C31
	10F	X	X										X	X	—	1 oz.	Grade 6 Std., Grade 10 Opt.				C32
	15F		X	X									X	X	X	2 oz.	Grade 6 Std., Grade 10 Opt.				C34
	11F		X	X	X								X	X	X	4.4 oz.	Grade 6 Std., Grade 10 Opt.				C36
	12F			X	X	X							X	X	X	7.2 oz.	Grade 6 Std., Grade 10 Opt.				C38
	P3NF					X	X		X				—	—	X	18 oz.	Grade 6 Std., Grade 10 Opt.				C40
	F701					X	X						—	X	X	32 oz. 100 oz.	Grade 6 Std., Grade 10 Std.				C42
	30F								X				—	X	—	14.8 oz.	Grade 6 Std., Grade 10 Std.				C44
	31F									X			—	X	—	17.9 oz. 20.9 oz.	Grade 6 Std., Grade 10 Std.				C44
	32F										X	X	—	X	—	29.7 oz.	Grade 6 Std., Grade 10 Std.				C44
WATER SEPERATORS	P3TF		X	X	X	X	X		X	X			Aluminum Body				Water Separator				C46

Parker Hannifin Corporation
Pneumatic Division
Richland, Michigan
www.parker.com/pneumatics

Product Selection Chart

Basic Unit		Series	Port Size										Spring Range													Page
			1/8	1/4	3/8	1/2	3/4	1	1-1/4	1-1/2	2	2-1/2	2	15	25	30	40	60	110	120	125	150	160	200	250	
REGULATORS	STANDARD	02R		X									—	—	—	—	—	—	—	—	Std.	—	—	—	—	C53
		14R	X	X									—	Opt.	—	Opt.	—	Opt.	—	—	Std.	—	—	—	—	C54
		P3A-R	X	X									—	Std.	—	Std.	—	Std.	—	Std.	—	—	—	—	—	C56
		R34	X	X									—	—	—	Opt.	—	Opt.	—	—	Std.	—	—	—	—	C58
		R24 / R25	X	X									—	—	—	Std.	—	Std.	—	—	Std.	—	—	—	—	C60
		R45 / R46		X	X								—	—	Std.	—	—	Std.	—	—	Std.	—	—	—	—	C62
		20R	X	X									—	Std.	—	Std.	—	Std.	—	—	Std.	—	—	—	—	C64
		15R		X	X								—	Opt.	—	Opt.	—	Opt.	—	—	Std.	—	—	—	—	C66
		05R		X	X								—	—	—	Opt.	—	Std.	—	—	Std.	—	—	Opt.	—	C68
		06R		X	X	X							—	—	—	—	—	Std.	—	—	Std.	—	—	—	Opt.	C70
		07R			X	X	X						—	—	—	—	—	Std.	—	—	Std.	—	—	—	Opt.	C72
		P3NR					X	X		X			—	—	—	—	—	Opt.	—	—	Std.	—	—	—	Opt.	C74
		R119					X	X	X	X			—	—	—	—	—	—	—	—	Std.	—	—	—	Opt.	C76
		09R									X		—	—	—	—	—	—	—	—	Std.	—	—	—	—	C78
	PILOT	10R		X	X								*	*	*	*	*	*	*	*	*	*	*	*	*	C80
		11R		X	X	X							*	*	*	*	*	*	*	*	*	*	*	*	*	C82
		12R			X	X	X						*	*	*	*	*	*	*	*	*	*	*	*	*	C84
		P3NR					X	X		X			*	*	*	*	*	*	*	*	*	*	*	*	*	C86
		R119					X	X	X	X	X	X	*	*	*	*	*	*	*	*	*	*	*	*	*	C88

* Will follow Pilot Regulator setting.

Parker Hannifin Corporation
Pneumatic Division
Richland, Michigan
www.parker.com/pneumatics

Product Selection Chart

Basic Unit		Series	Port Size									Bowls			Capacity	Elements (Micron)			Adsorber	Spring Range								Page
			1/8	1/4	3/8	1/2	3/4	1	1-1/4	1-1/2	2	Poly	Metal	Metal SG		5	20	40		15	25	30	60	110	125	200	250	
FILTER/REGULATORS		14E	X	X								X	X	—	1 oz.	Std.	—	Opt.	Opt.	Opt.	—	Opt.	Opt.	—	Std.	—	—	C94
		B344	X	X								X	X		X	X	Opt.			—	Opt.	—	Opt.	—	Std.	—	—	C96
		05E		X	X							X	X	X	2 oz.	Opt.	—	Std.	Opt.	—	—	Opt.	Std.	—	Std.	Opt.	—	C98
		06E		X	X	X						X	X	X	4.4 oz.	Opt.	—	Std.	Opt.	—	—	Std.	Std.	—	Std.	—	Opt.	C100
		07E			X	X	X					X	X	X	7.2 oz.	Opt.	—	Std.	Opt.	—	—	Std.	Std.	—	Std.	—	Opt.	C102
		P3NE					X	X		X		—	—	X	18 oz.	Opt.	—	Std.	Opt.	—	—	—	Std.	—	Std.	—	Std.	C104
		12E			X	X	X					—	X	—	7.2 oz.	6 Std.	—	10 Opt.	—	—	—	Opt.	Opt.	—	Std.	—	Opt.	C106
LUBRICATORS	MICROMIST	15L		X	X							X	X	X	2 oz.	Cannot be filled under pressure												C110
		16L		X	X	X						X	X	X	2.6 oz.	Cannot be filled under pressure												C112
		17L			X	X	X					X	X	X	4.9 oz.	Cannot be filled under pressure												C114
	MIST	02L		X	X							Aluminum Body			.25 oz.	Cannot be filled under pressure												C119
		04L	X	X								X	X	—	1 oz.	Cannot be filled under pressure												C120
		06L		X	X	X						X	X	X	2.9 oz.	Can be filled under pressure												C122
		07L			X	X	X					X	X	X	6 oz.	Can be filled under pressure												C124
		P3NL					X	X		X		—	—	X	18 oz.	Can be filled under pressure												C126
		L606					X	X	X	X		—	X	X	16 oz. 32 oz. 64 oz.	Can be filled under pressure												C128
		09L									X	—	—	X	1 Qt. Std. 3 Qt. Opt.	Can be filled under pressure												C132
COMBOS	NIPPLED	14G	X	X								X	X	—	1 oz.	Two-Unit				Opt.		Opt.	Opt.	—	Std.	—	—	C136
		14A	X	X								X	X	—	1 oz.	Three-Unit				Opt.		Opt.	Opt.	—	Std.	—	—	
		15G		X	X							X	X	X	2 oz.	Two-Unit				—		Opt.	Std.	—	Std.	Opt.	—	C138
		15A		X	X							X	X	X	2 oz.	Three-Unit				—		Opt.	Std.	—	Std.	Opt.	—	
		06G/16G		X	X	X						X	X	X	2 oz.	Two-Unit				—		—	Std.	—	Std.	—	Opt.	C144
		06A/16A		X	X	X						X	X	X	2 oz.	Three-Unit				—		—	Std.	—	Std.	—	Opt.	
		07G/17G			X	X	X					X	X	X	2 oz.	Two-Unit				—		—	Std.	—	Std.	—	Opt.	
		07A/17A			X	X	X					X	X	X	2 oz.	Three-Unit				—		—	Std.	—	Std.	—	Opt.	
		P3N3A					X	X		X		—	—	X	18 oz.	Two-Unit				—		—	Std.	—	Std.	—	Std.	C150
		P3N3B					X	X		X		—	—	X	18 oz.	Three-Unit				—		—	Std.	—	Std.	—	Std.	
		C628					X	X	X	X		—	X	X	32 & 16	Three-Unit				—		—	—	—	Std.	—	Std.	C155
	MODULAR	15H		X	X							X	X	X	2 oz.	Two-Unit				—		Opt.	Std.	—	Std.	Opt.	—	C140
		15B		X	X							X	X	X	2 oz.	Three-Unit				—		Opt.	Std.	—	Std.	Opt.	—	
		06H/16H		X	X	X						X	X	X	2 oz.	Two-Unit				—		—	Std.	—	Std.	—	Opt.	C146
		06B/16B		X	X	X						X	X	X	2 oz.	Three-Unit				—		—	Std.	—	Std.	—	Opt.	
		07H/17H			X	X	X					X	X	X	2 oz.	Two-Unit				—		—	Std.	—	Std.	—	Opt.	
		07B/17B			X	X	X					X	X	X	2 oz.	Three-Unit				—		—	Std.	—	Std.	—	Opt.	
		P3NCA					X	X		X		—	—	X	18 oz.	Two-Unit				—		—	Std.	—	Std.	—	Std.	C152
		P3NCB					X	X		X		—	—	X	18 oz.	Three-Unit				—		—	Std.	—	Std.	—	Std.	

Parker Hannifin Corporation
Pneumatic Division
Richland, Michigan
www.parker.com/pneumatics

Filters

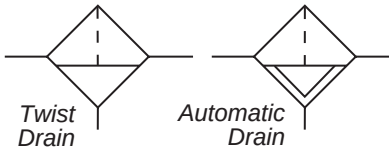

- Pipe Sizes 1/8 thru 2 Inch
- Flows to 1000 SCFM
- Pressures to 250 psig

Air filters are designed to remove airborne solid contaminants, pipe scale, rust, pipe dope, etc., which may plug small orifices or cause excessive wear and premature failure of pneumatic components.

- Miniature 02F Series, 1/4 Inch
- Miniature 14F Series, 1/8 and 1/4 Inch
- Economy 05F Series, 1/4 and 3/8 Inch
- Compact 06F Series, 1/4, 3/8 and 1/2 Inch
- Standard 07F Series, 3/8, 1/2 and 3/4 Inch
- Hi-Flow P3NF Series, 3/4, 1 and 1-1/2 Inch
- Hi-Flow F602 Series, 3/4, thru 2 Inch
- Hi-Flow 09F Series, 2 Inch

Filter Selection

1. Determine maximum system flow requirements.
2. Determine maximum allowable pressure drop at rated flow in SCFM.
3. Refer to flow chart and select filter pipe size by choosing curve that offers minimum pressure drop at desired flow in SCFM. For optimum performance, a 2 to 5 psig pressure drop should be selected.

Reading Flow Charts to Size Filters

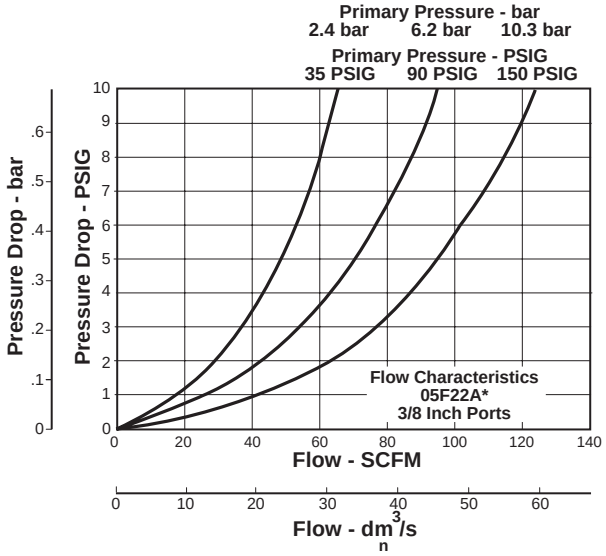

Once the required flow is determined for a pneumatic application, the filter can be selected by using the flow chart. To read the filter flow chart, first determine the inlet pressure that will be used. Find the appropriate pressure curve on the graph. Each graph will contain three pressure curves. If the required inlet pressure is not on the graph, interpolate a similar curve for the required pressure. Next, determine the acceptable pressure drop across the filter and locate it on the vertical axis. Find the intersection point of the acceptable pressure drop and the inlet pressure curve. At this point follow a vertical path downward to view the flow in SCFM. If the flow is too low, select a larger port size or body size to give the required flow. If the flow is higher than necessary, select a smaller port size or body size to give the required flow.

Parker Hannifin Corporation
Pneumatic Division
Richland, Michigan
www.parker.com/pneumatics

Particulate Filters:

For the removal of solid particle contaminants down to 5 microns and the separation of bulk liquids.

This type of filter is generally used in industrial applications where liquid water and oil, and harmful dirt particles must be removed from the compressed air system. This type of filter should also be used as a prefilter for the Coalescing (oil removal) filter.

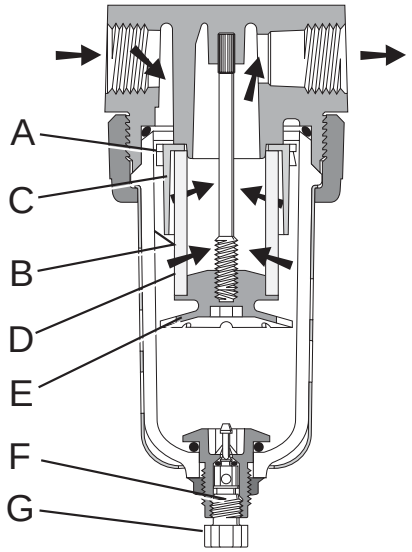

First Stage Filtration:

Air enters at inlet port and flows through deflector plate (**A**) which causes a swirling action. Liquids and coarse particles are forced to the bowl interior wall (**B**) by the centrifugal action of the swirling air. They then carry down the bowl wall by the force of gravity. Shroud (**C**) assures that the proper swirling action occurs and that the air does not pass directly through the filter element (**D**) until the large particles and liquids are removed. The baffle (**E**) separates the lower portion of the bowl into a “quiet zone” where the removed liquids and particles collect, unaffected by the swirling air, and are therefore not reentrained into the flowing air.

Second Stage Filtration:

After liquids and large particles are removed in the first stage of filtration, the air flows through element (**D**) where smaller particles are filtered out and retained. The filtered air then passes downstream. Collected liquids and particles in the “quiet zone” should be drained before their level reaches a height where they would be reentrained in the flowing air. This can be accomplished by the twist drain (**F**) which is actuated by twisting knob (**G**) counterclockwise. On the 09 Series, unscrew the drain valve (**F**) slightly until the liquid begins to drain.

Semi Automatic Drain

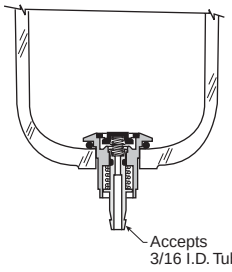

(Overnight Drain)

This drain offers a semi-automatic function when there is a differential pressure in the filter which occurs when system pressure is shut off. The drain can also be used manually by gripping it with your fingertips and pushing upward.

Automatic Pulse Drain

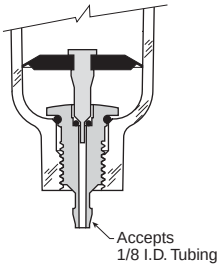

(Spitter Drain)

The diaphragm in this drain pulses when there is a pressure differential such as a valve cycling or cylinder stroking downstream. This action flexes the diaphragm and allows the filter to drain the entrapped water.

Automatic Float Drain

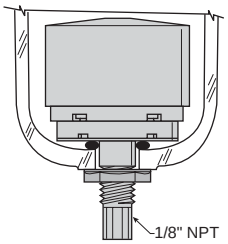

The float internal to this drain rises with increased liquid level. When the float rises, it opens a seat area allowing the trapped liquids to drain through the bottom.
A manual override can be pushed in the bottom of the drain to unseat the float if particulates create a block.

Parker Hannifin Corporation
Pneumatic Division
Richland, Michigan
www.parker.com/pneumatics

Notes

Parker Hannifin Corporation
Pneumatic Division
Richland, Michigan
www.parker.com/pneumatics

02F Filters – Miniature

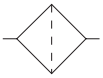

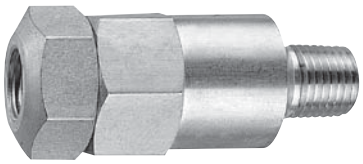

Specifications

Flow Capacity*.....17 SCFM (8 dm^3/s)
Operating Temperature.....32° to 150°F (0° to 65.5°C)
Maximum Supply Pressure.....200 psig (13.8 bar)
Standard Filtration.....5 Micron
Port Size NPT / BSPT.....1/4
Weight lb. (kg) ..... 0.13 lb. (0.06 kg)

* Inlet pressure 90 psig (6.2 bar). Pressure drop 5 PSID (0.3 bar).

"F" Series Filters, Type "A" 5 micron elements: All Parker 5 micron elements **meet or exceed ISO** Class 3 for maximum particle size and concentration of solid contaminants.

Application

This small, aluminum in-line filter is designed to provide protection for portable pneumatic hand tools. It weighs only 2 ounces with a throw-away filter element rated at 5 micron. Either port may be used as the inlet port. Flow is 17 SCFM (10.3 dm^3/s) at 90 psig (6.2 bar) inlet pressure with 5 psig (0.3 bar) pressure drop.

Materials of Construction

Body.....Aluminum
Baffle.....Aluminum
Filter Element.....Sintered Polyethylene
Seals.....Nitrile

Replacement Element Kits

5 Micron.....PS436

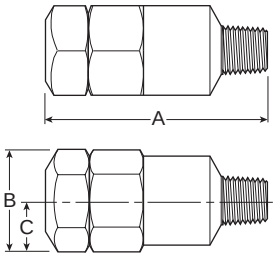

Part Number	02F Filter Dimensions		
	A	B	C
02F1BA	2.50 (63.5)	1.00 (25)	.50 (13)

Inches (mm)

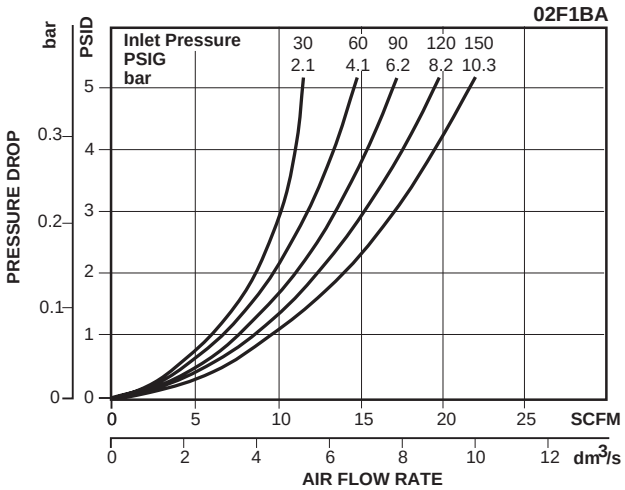

Ordering Information

Port Size	5 Micron
1/4"	**02F1BA**

Parker Hannifin Corporation
Pneumatic Division
Richland, Michigan
www.parker.com/pneumatics

14F Filters – Miniature

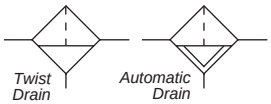

Features

- Excellent water removal efficiency.
- Unique deflector plate that creates swirling of the air stream ensuring maximum water and dirt separation.
- Easily disassembled for servicing without the use of tools.
- 5 micron element standard.
- Interchangable Twist and Automatic Pulse Drains.
- High Flow: 1/8" – 22 SCFM§
  1/4" – 24 SCFM§

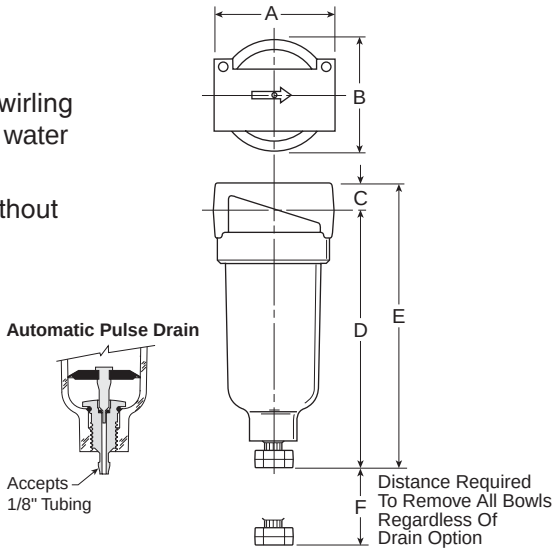

Port Size	NPT	
	Twist Drain	Automatic Pulse Drain
Poly Bowl ‡		
1/8"	**14F01B***	**14F05B***
1/4"	**14F11B***	**14F15B***
Metal Bowl without Sight Gauge		
1/8"	**14F03B***	**14F07B***
1/4"	**14F13B***	**14F17B***

Standard part numbers shown bold.
For other models refer to ordering information below.

‡ For polycarbonate bowl see Caution on page C2.

§ SCFM = Standard cubic feet per minute at 90 psig inlet and 5 psig pressure drop.

14F Filter Dimensions		
A 1.69 (43)	**B** 1.53 (39)	**C** .39 (10)
D 3.82 (97)	**D†** 3.87 (99)	**E** 4.21 (107)
E† 4.26 (108)	**F** 1.60 (41)	

Inches (mm)

† With Automatic Pulse Drain.

Ordering Information

14F	1	1	B	*	—

Port Size
- **0 1/8 Inch**
- **1 1/4 Inch**

Bowl Options
- Polycarbonate Bowl
- **1 Twist Drain**
- **5 Automatic Pulse Drain**
- Metal Bowl
- **3 Twist Drain**
- **7 Automatic Pulse Drain**

Elements
- A 40 Micron
- **B 5 Micron**
- Z Adsorber

Engineering Level
- * Will be Entered at Factory

Port Type
- **Blank NPT**
- 1 BSPP
- 2 BSPT

BOLD ITEMS ARE MOST POPULAR.

Parker Hannifin Corporation
Pneumatic Division
Richland, Michigan
www.parker.com/pneumatics

Technical Information

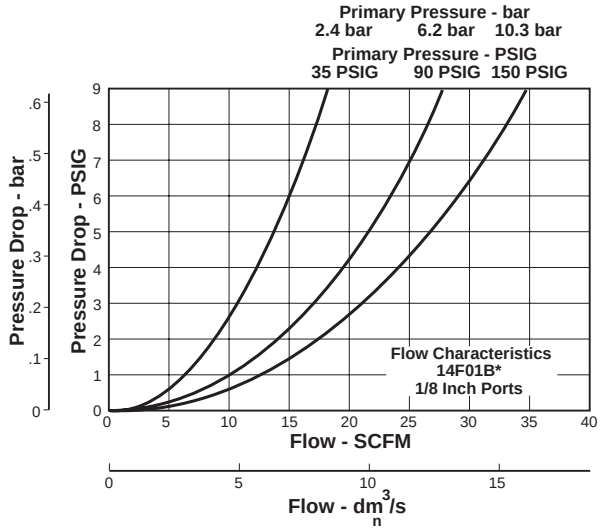

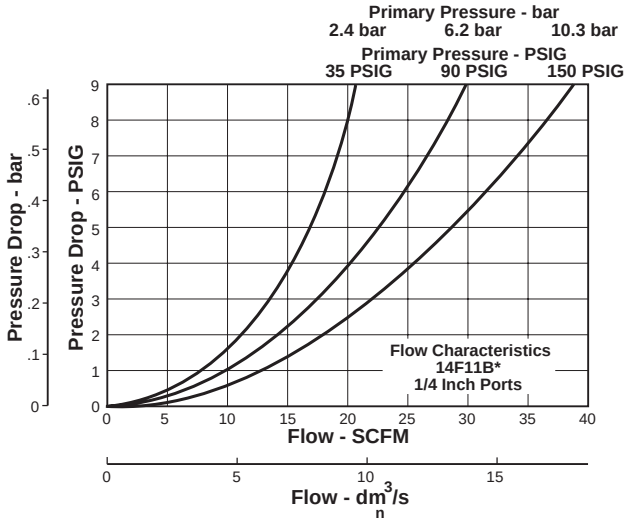

14F Filter Kits & Accessories

Bowl Kits –
Poly Bowl –
Automatic Pulse Drain PS408BP
Twist Drain PS404P

Metal Bowl –
Automatic Pulse Drain PS451BP
Twist Drain PS447BP

Filter Element Kits –
40 Micron PS401P
5 Micron PS403P
5 Micron Cartridge Kit PS407P
Adsorber PS452P

Mounting Bracket Kit PS417BP

Specifications

Automatic Pulse Drain Tube Barb ..... 1/8 Inch

Bowl Capacity ..... 1 Ounce

Port Threads ..... 1/8, 1/4 Inch

Pressure & Temperature Ratings –
Polycarbonate Bowl ..... 0 to 150 psig (0 to 10.3 bar)
32°F to 125°F (0°C to 52°C)

Metal Bowl ..... 0 to 250 psig (0 to 17.2 bar)
32°F to 175°F (0°C to 80°C)

Automatic Pulse Drain ..... 10 to 250 psig (0.7 to 17.2 bar)
at 125°F (52°C) or less

Weight ..... 0.41 lb. (0.18 kg)

Materials of Construction

Body ..... Zinc

Bowls ..... Transparent Polycarbonate
Metal (Zinc) Bowl w/o Sight Gauge

Deflector, Element Holder & Baffle ..... Plastic

Drains –
Twist Drain –
Body & Stem ..... Plastic
Seals ..... Nitrile

Automatic Pulse Drain –
Piston & Seals ..... Nitrile
Stem, Seat, Adaptor & Washers ..... Aluminum

Filter Elements –
5 Micron (Standard) ..... Plastic
40 Micron (Optional) ..... Plastic
Adsorber (Optional) ..... Activated Charcoal

Seals ..... Nitrile

Parker Hannifin Corporation
Pneumatic Division
Richland, Michigan
www.parker.com/pneumatics

05F Filters – Economy

Features

- Excellent water removal efficiency.
- Unique deflector plate and shroud creates a swirling of the air stream ensuring maximum water and dirt separation.
- Large filter element surface guarantees low pressure drop and increased element life.
- 40 micron filter element standard, 5 micron and adsorber available.
- Shown with recommended metal bowl guard.
- High Flow: 1/4" – 54 SCFM§
  3/8" – 70 SCFM§

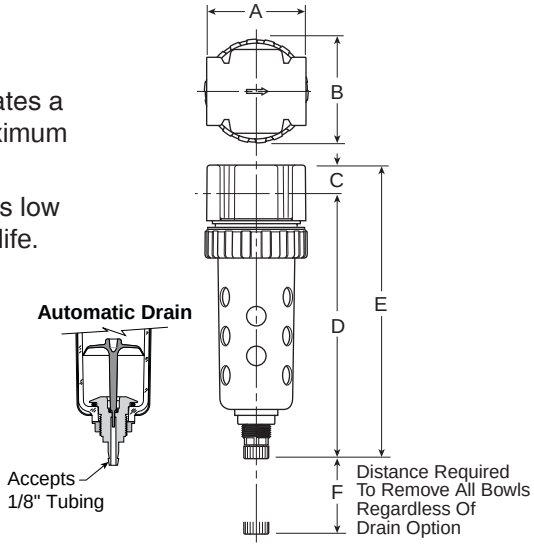

Port Size	NPT	
	Twist Drain	Automatic Pulse Drain
Poly Bowl‡ / Metal Guard		
1/4"	**05F12A***	**05F1PA***
3/8"	**05F22A***	**05F2PA***
Metal Bowl / Sight Gauge		
1/4"	**05F14A***	**05F1TA***
3/8"	**05F24A***	**05F2TA***

Standard part numbers shown bold.
For other models refer to ordering information below.

‡ For polycarbonate bowl see Caution on page C2.

§ SCFM = Standard cubic feet per minute at 90 psig inlet and 5 psig pressure drop.

05F Filter Dimensions		
A	**B**	**C**
2.00 (51)	2.06 (52)	.56 (14)
D†	**E†**	**F**
5.35 (136)	5.91 (150)	2.25 (57)

Inches (mm)

† With Twist or Automatic Pulse Drain

Ordering Information

05F	1	2	A	*	—	—

Port Size

1	**1/4 Inch**
2	**3/8 Inch**

Bowl Options

Polycarbonate Bowl	Metal Bowl
1 Twist Drain	3 Twist Drain
2 Metal Bowl Guard / Twist Drain	**4 Sight Gauge / Twist Drain**
N Auto Pulse Drain	R Auto Pulse Drain
P Metal Bowl Guard / Auto Pulse Drain	**T Sight Gauge / Auto Pulse Drain**

Elements

A	**40 Micron**
B	5 Micron
Z	Adsorber

Engineering Level

* Will be Entered at Factory

Port Type

Blank	**NPT**
1*	BSPP
2	BSPT

* 1/4 & 3/8 inch meet ISO 1179-1 Standard.

Options

Blank	**No Options**
P	With Differential Pressure Indicator

BOLD ITEMS ARE MOST POPULAR.

Parker Hannifin Corporation
Pneumatic Division
Richland, Michigan
www.parker.com/pneumatics

Technical Information

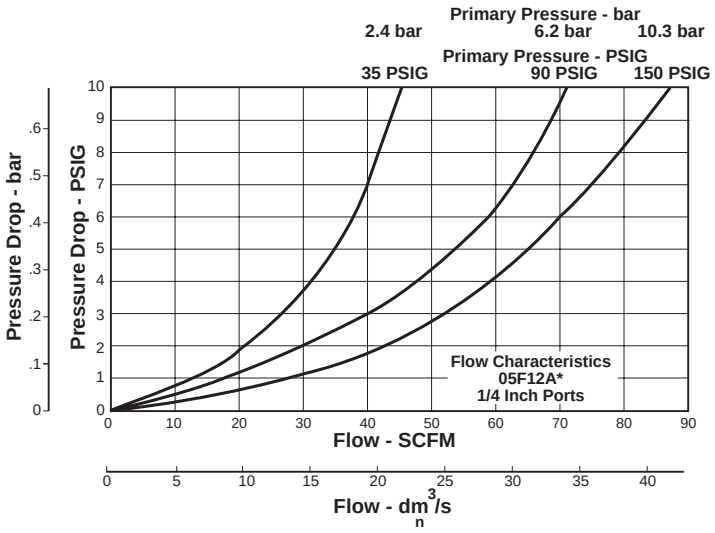

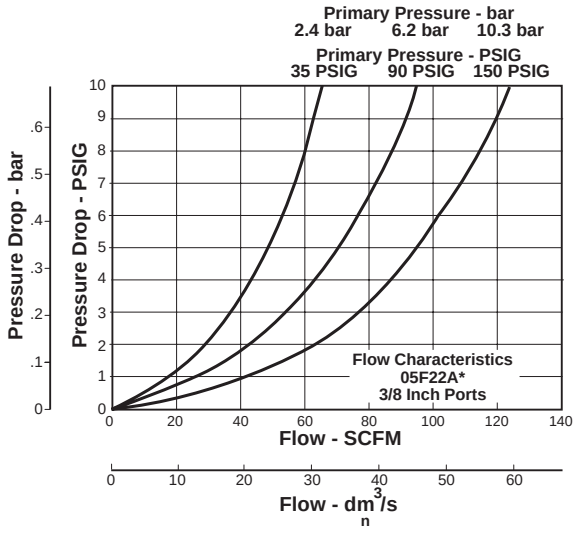

05F Filter Kits & Accessories

Bowl Guard Kit PS905P

Bowl Kits –
- Poly Bowl –
  - Automatic Pulse Drain PS995P
  - Twist Drain PS932P
- Metal Bowl –
  - Automatic Pulse Drain PS997P
  - Twist Drain PS934P
  - Sight Gauge / Automatic Pulse Drain PS996P
  - Sight Gauge / Twist Drain PS935P

DPI Replacement Kit PS781P

Drain Kit –
- Automatic Pulse Drain PS998P
- Semi-Auto Drain PS511P
- Twist Drain PS512P
- Push 'N' Drain PS513P

Filter Element Kits –
- 40 Micron PS901P
- 5 Micron PS902P
- Adsorber PS931P

Mounting Bracket Kit PS943P

Sight Gauge Kit PS914P

Specifications

Bowl Capacity ..... 2.0 Ounces

Sump Capacity ..... 0.9 Ounce

Port Threads ..... 1/4, 3/8 Inch

Pressure & Temperature Ratings –
Without Differential Pressure Indicator:
Polycarbonate Bowl – 0 to 150 psig (0 to 10.3 bar)
32°F to 125°F (0°C to 52°C)
Metal Bowl – 0 to 250 psig (0 to 17.2 bar)
32°F to 175°F (0°C to 80°C)
With Differential Pressure Indicator: 0 to 150 psig (0 to 10.3 bar)
32°F to 125°F (0°C to 52°C)
Automatic Pulse Drain – 10 to 150 psig (0.7 to 10.3 bar)

Weight ..... 1.2 lb. (0.54 kg)

Materials of Construction

Body ..... Zinc

Bowls ..... Transparent Polycarbonate or Metal (Zinc) With or Without Sight Gauge

Bowl Guards ..... Steel

Collar ..... Plastic

Deflector, Shroud & Baffle ..... Plastic

Drain ..... Plastic

Filter Elements –
- 40 Micron (Standard) ..... Plastic
- 5 Micron (Optional) ..... Plastic
- Adsorber (Optional) ..... Activated Charcoal

Seals ..... Nitrile

Sight Gauge, DPI ..... Polyamide (Nylon)

Parker Hannifin Corporation
Pneumatic Division
Richland, Michigan
www.parker.com/pneumatics

06F Filters – Compact

Features

- Excellent water removal efficiency.
- Unique deflector plate and shroud creates a swirling of the air stream ensuring maximum water and dirt separation.
- Large filter element surface guarantees low pressure drop and increased element life.
- Optional Push 'N' Drain requires only fingertip touch to drain. Optional automatic float drain available.
- Shown with recommended metal bowl guard.
- High Flow: 1/4" – 53 SCFM§
  3/8" – 80 SCFM§
  1/2" – 85 SCFM§

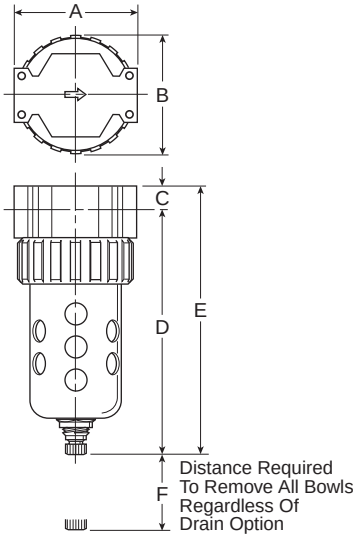

Port Size	NPT	
	Twist Drain	Automatic Float Drain
Poly Bowl‡ / Metal Guard		
1/4"	**06F12A***	**06F16A***
3/8"	**06F22A***	**06F26A***
1/2"	**06F32A***	**06F36A***
Metal Bowl / Sight Gauge		
1/4"	**06F14A***	**06F18A***
3/8"	**06F24A***	**06F28A***
1/2"	**06F34A***	**06F38A***

Standard part numbers shown bold.
For other models refer to ordering information below.

‡ For polycarbonate bowl see Caution on page C2.

§ SCFM = Standard cubic feet per minute at 90 psig inlet and 5 psig pressure drop.

06F Filter Dimensions		
A 2.81 (71)	**B** 2.74 (70)	**C** .53 (13)
D 5.69 (145)	**D†** 5.74 (146)	**E** 6.22 (158)
E† 6.27 (159)	**F** 2.25 (57)	

Inches (mm)

† With Automatic Float Drain

Ordering Information

06F	1	2	A	*	—	—

Port Size
- **1 1/4 Inch**
- **2 3/8 Inch**
- **3 1/2 Inch**

Bowl Options

Polycarbonate Bowl	Metal Bowl
1 Twist Drain	3 Twist Drain
2 Metal Bowl Guard / Twist Drain	**4 Sight Gauge / Twist Drain**
5 Auto Float Drain	7 Auto Float Drain
6 Metal Bowl Guard / Auto Float Drain	**8 Sight Gauge / Auto Float Drain**

Elements
- **A 40 Micron**
- B 5 Micron
- Z Adsorber

Engineering Level
- * Will be Entered at Factory

Options
- **Blank None**
- P Differential Pressure Indicator

Port Type
- **Blank NPT**
- 1* BSPP
- 2 BSPT

* 1/4 & 3/8 inch meet ISO 1179-1 Standard.

BOLD ITEMS ARE MOST POPULAR.

Parker Hannifin Corporation
Pneumatic Division
Richland, Michigan
www.parker.com/pneumatics

Technical Information

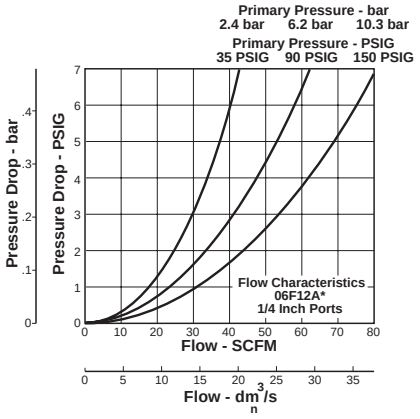

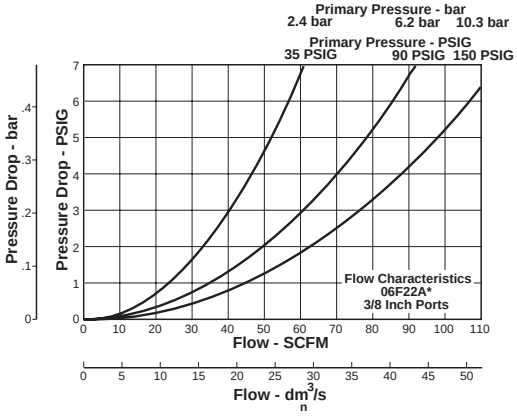

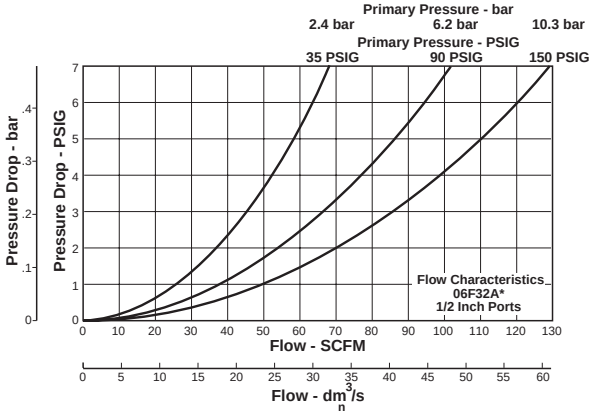

06F Filter Kits & Accessories

Bowl Guard Kit PS705P

Bowl Kits –
- Poly Bowl –
  - Automatic Float Drain PS722P
  - Twist Drain PS732P
- Metal Bowl –
  - Automatic Float Drain PS726P
  - Twist Drain PS734P
  - Sight Gauge / Automatic Float Drain PS723P
  - Sight Gauge / Twist Drain PS735P

DPI Replacement Kit PS781P

Drain Kits –
- Automatic Float Drain PS506P
- Semi-Auto Drain PS511P
- Twist Drain PS512P
- Push 'N' Drain PS513P

Filter Element Kits –
- 40 Micron PS701P
- 5 Micron PS702P
- Adsorber PS731P

Mounting Bracket Kit PS743P

Sight Gauge Kit PS914P

Specifications

Bowl Capacity ..... 4.4 Ounces

Sump Capacity ..... 1.75 Ounces

Port Threads ..... 1/4, 3/8, 1/2 Inch

Pressure & Temperature Ratings –

Without Differential Pressure Indicator:
Polycarbonate Bowl – 0 to 150 psig (0 to 10.3 bar)
32°F to 125°F (0°C to 52°C)
Metal Bowl – 0 to 250 psig (0 to 17.2 bar)
32°F to 175°F (0°C to 80°C)
With Differential Pressure Indicator: 0 to 150 psig (0 to 10.3 bar)
32°F to 125°F (0°C to 52°C)
Automatic Float Drain – 15 to 250 psig (1.0 to 17.2 bar)

Weight ..... 1.4 lb. (0.6 kg)

Materials of Construction

Body ..... Zinc

Bowls ..... Transparent Polycarbonate or Metal (Zinc) With or Without Sight Gauge

Bowl Guards ..... Steel

Collar ..... Plastic

Deflector, Shroud & Baffle ..... Plastic

Drains –
- Twist Drain – Body & Nut ..... Plastic
- Push 'N' Drain –
  - Body ..... Nitrile
  - Stem ..... Brass
- Automatic Float Drain – Housing, Float ..... Plastic
  - Seals ..... Nitrile
  - Springs, Push Rod ..... Stainless Steel

Filter Elements –
- 40 Micron (Standard) ..... Plastic
- 5 Micron (Optional) ..... Plastic
- Adsorber (Optional) ..... Activated Charcoal

Seals ..... Nitrile

Sight Gauge ..... Polyamide

Parker Hannifin Corporation
Pneumatic Division
Richland, Michigan
www.parker.com/pneumatics

07F Filters – Standard

Features

- Excellent water removal efficiency.
- Unique deflector plate and shroud creates a swirling of the air stream ensuring maximum water and dirt separation.
- Large filter element surface guarantees low pressure drop and increased element life.
- Optional Push 'N' Drain requires only fingertip touch to drain. Optional automatic float drain available.
- Shown with recommended metal bowl guard.
- High Flow: 3/8" – 100 SCFM§
  1/2" – 130 SCFM§
  3/4" – 145 SCFM§

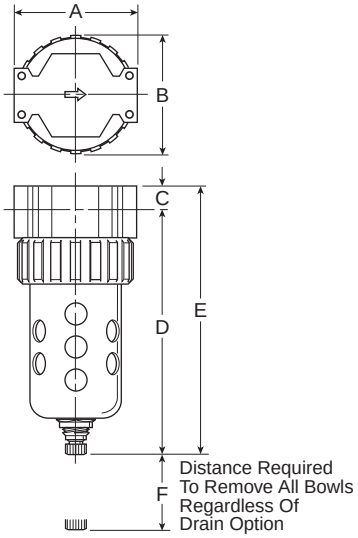

Port Size	NPT	
	Twist Drain	Automatic Float Drain
Poly Bowl‡ / Metal Guard		
3/8"	**07F22A***	**07F26A***
1/2"	**07F32A***	**07F36A***
3/4"	**07F42A***	**07F46A***
Metal Bowl / Sight Gauge		
3/8"	**07F24A***	**07F28A***
1/2"	**07F34A***	**07F38A***
3/4"	**07F44A***	**07F48A***

Standard part numbers shown bold.
For other models refer to ordering information below.

‡ For polycarbonate bowl see Caution on page C2.

§ SCFM = Standard cubic feet per minute at 90 psig inlet and 5 psig pressure drop.

07F Filter Dimensions		
A 3.24 (82)	**B** 3.25 (83)	**C** .70 (18)
D 6.97 (177)	**D†** 7.00 (178)	**E** 7.67 (195)
E† 7.70 (196)	**F** 2.75 (70)	

Inches (mm)

† With Automatic Float Drain

Ordering Information

07F	3	2	A	*	—	—

Port Size
- **2 3/8 Inch**
- **3 1/2 Inch**
- **4 3/4 Inch**

Bowl Options

Polycarbonate Bowl	Metal Bowl
1 Twist Drain	3 Twist Drain
2 Metal Bowl Guard / Twist Drain	**4 Sight Gauge / Twist Drain**
5 Auto Float Drain	7 Auto Float Drain
6 Metal Bowl Guard / Auto Float Drain	**8 Sight Gauge / Auto Float Drain**

Elements
- **A 40 Micron**
- B 5 Micron
- Z Adsorber

Engineering Level
- * Will be Entered at Factory

Options
- **Blank None**
- P Differential Pressure Indicator

Port Type
- **Blank NPT**
- 1* BSPP
- 2 BSPT

* 3/8 & 1/2 inch meet ISO 1179-1 Standard.

BOLD ITEMS ARE MOST POPULAR.

Parker Hannifin Corporation
Pneumatic Division
Richland, Michigan
www.parker.com/pneumatics

Technical Information

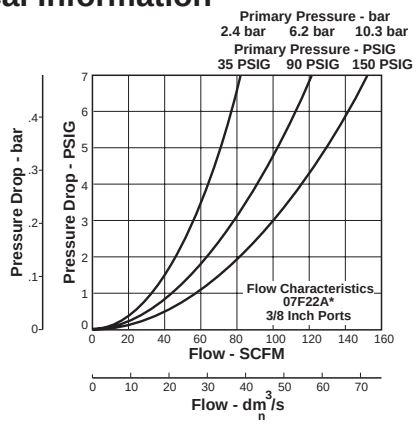

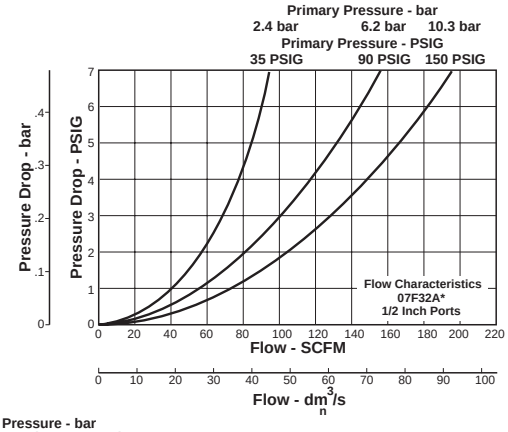

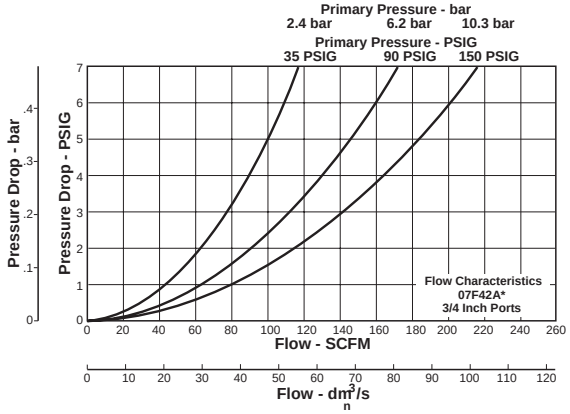

07F Filter Kits & Accessories

Bowl Guard Kit PS805P

Bowl Kits –
- Poly Bowl –
  - Automatic Float Drain PS822P
  - Twist Drain PS832P
- Metal Bowl –
  - Automatic Float Drain PS826P
  - Twist Drain PS834P
  - Sight Gauge / Automatic Drain PS823P
  - Sight Gauge / Twist Drain PS835P

DPI Replacement Kit PS781P

Drain Kits –
- Automatic Float Drain PS506P
- Semi-Auto Drain PS511P
- Twist Drain PS512P
- Push 'N' Drain PS513P

Filter Element Kits –
- 40 Micron PS801P
- 5 Micron PS802P
- Adsorber PS831P

Mounting Bracket Kit PS843P

Sight Gauge Kit PS914P

Specifications

Bowl Capacity ..... 7.2 Ounces

Sump Capacity ..... 2.8 Ounces

Port Threads ..... 3/8, 1/2, 3/4 Inch

Pressure & Temperature Ratings –

Without Differential Pressure Indicator:
Polycarbonate Bowl – 0 to 150 psig (0 to 10.3 bar)
32°F to 125°F (0°C to 52°C)
Metal Bowl – 0 to 250 psig (0 to 17.2 bar)
32°F to 175°F (0°C to 80°C)

With Differential Pressure Indicator: 0 to 150 psig (0 to 10.3 bar)
32°F to 125°F (0°C to 52°C)
Automatic Float Drain – 15 to 250 psig (1.0 to 17.2 bar)

Weight ..... 2.2 lb. (1.0 kg)

Materials of Construction

Body ..... Zinc

Bowls ..... Transparent Polycarbonate
Metal (Zinc) With or Without Sight Gauge

Bowl Guards ..... Steel

Collar ..... Plastic or Metal

Deflector, Shroud & Baffle ..... Plastic

Drains –
- Twist Drain – Body & Nut ..... Plastic
- Push 'N' Drain –
  - Body ..... Nitrile
  - Stem ..... Brass
- Automatic Float Drain –
  - Housing, Float ..... Plastic
  - Seals ..... Nitrile
  - Springs, Push Rod ..... Stainless Steel

Filter Elements –
- 40 Micron (Standard) ..... Plastic
- 5 Micron (Optional) ..... Plastic
- Adsorber (Optional) ..... Activated Charcoal

Seals ..... Nitrile

Sight Gauge ..... Polyamide

Parker Hannifin Corporation
Pneumatic Division
Richland, Michigan
www.parker.com/pneumatics

P3NF Filters – Hi-Flow

Features

- Port blocks (PB) available to provide 1-1/2" port extension to 1" ported bodies.
- Excellent water removal efficiency.
- Metal bowl with sight gauge.
- Large filter element surface guarantees low pressure drop and increased element life.
- Twist Drain as standard, optional automatic float drain.
- High Flow: 3/4" – 270 SCFM§
  1" – 300 SCFM§
  1-1/2" – 310 SCFM§

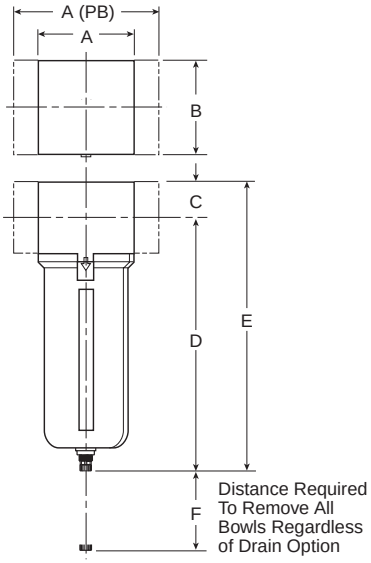

Port Size	NPT	
	Twist Drain	Automatic Float Drain
Metal Bowl / Sight Gauge		
3/4"	**P3NFA96GSM**	**P3NFA96GSA**
1"	**P3NFA98GSM**	**P3NFA98GSA**
1-1/2"#	**P3NFA9PGSM**	**P3NFA9PGSA**

Standard part numbers shown bold. For other models refer to ordering information below.

1" Port Body with 1-1/2" Port Block.

§ SCFM = Standard cubic feet per minute at 90 psig inlet and 5 psig pressure drop, with 40 micron element.

P3NF Filter Dimensions		
A 3.62 (92)	**A (PB)** 5.91 (150)	**B** 3.62 (92)
C 1.38 (35)	**D†** 9.57 (243)	**E†** 10.95 (278)
F 4.92 (125)		

Inches (mm)

† With Twist Drain or Automatic Float Drain

Ordering Information

P3N	F	A	9	8	G	S	M

Design Level

Port Type
- 1* G Thread (BSPP) Female
- 2 Rc Thread (BSPT) Female
- **9 NPT Female**

* 3/4 & 1 inch meet ISO 1179-1 Standard.

Port Size
- **6 3/4" (w/o Port Blocks)**
- **8 1" (w/o Port Blocks)**
- **P 1-1/2" Port Blocks (w/ 1" Ported Body)**

Element
- w/o DPI Indicator
- A Adsorber
- E 5 Micron
- **G 40 Micron**
- w/ DPI Indicator
- B Adsorber
- F 5 Micron
- H 40 Micron

Bowl
- **S Metal Bowl w/ Sight Gauge**

Drain
- **M Twist Drain**
- A Automatic Float Drain

BOLD ITEMS ARE MOST POPULAR.

Parker Hannifin Corporation
Pneumatic Division
Richland, Michigan
www.parker.com/pneumatics

Technical Information

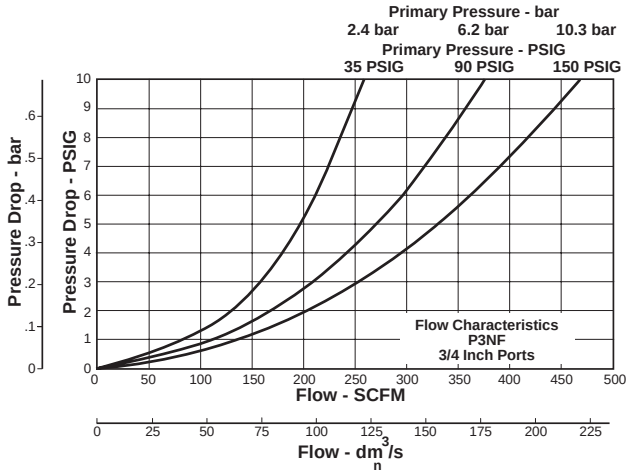

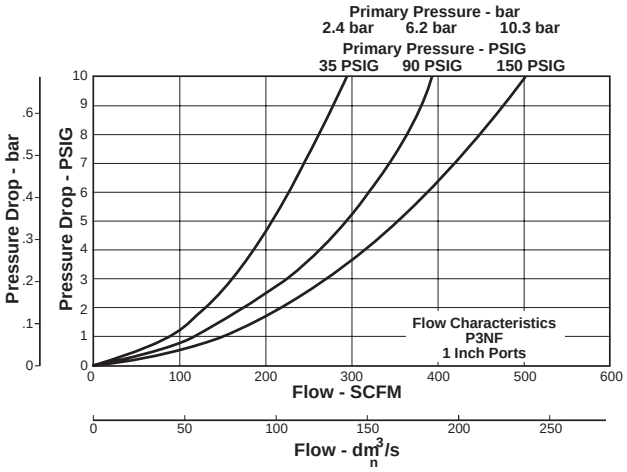

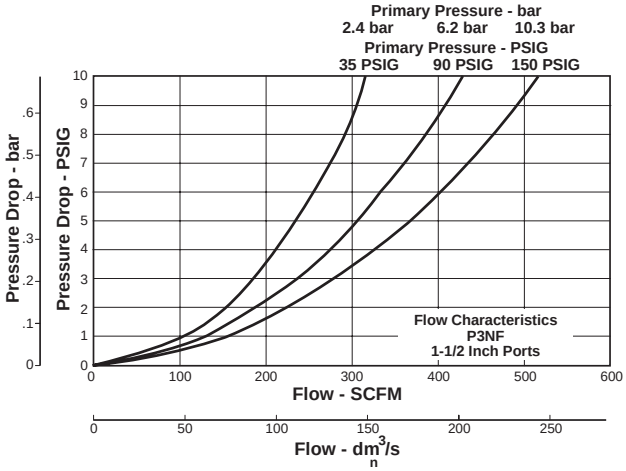

P3NF Filter Kits & Accessories

Bowl Kits –
Metal Bowl –
Sight Gauge / Automatic Float Drain P3NKA00BSA
Sight Gauge / Twist Drain P3NKA00BSM
Sight Gauge / Push 'N' Drain P3NKA00BSP

Bowl Latch Kit C11A33

DPI Replacement Kit PS781P

Drain Kit –
Automatic Float Drain PS506P
Twist Drain PS512P

Filter Elements –
40 Micron P3NKA00ESG
5 Micron P3NKA00ESE
Adsorber P3NKA00ESA

Mounting Bracket Kit* P3NKA00MW

Sight Gauge Kit P3NKA00PE

* If 1-1/2 BSPP E02 fittings are required, use P3NKA0BMW.

Specifications

Pressure & Temperature Rating –
0 to 250 psig (0 to 17 bar) 32°F to 175°F (0°C to 80°C)
Automatic Float Drain – 15 to 250 psig (1.0 to 17 bar)

Bowl Capacity ..... 18.0 Ounces

Sump Capacity ..... 6.8 Ounces

Weight –
3/4" ..... 3.5 lb. (1.6 kg)
1" ..... 3.5 lb. (1.6 kg)
1-1/2" # ..... 4.6 lb. (2.1 kg)

Materials of Construction

Body ..... Aluminum

Deflector ..... Plastic

Drain ..... Plastic

Filter Elements –
40 Micron (Standard) ..... Plastic
5 Micron (Optional) ..... Plastic
Adsorber (Optional) ..... Activated Charcoal

Seals ..... Nitrile

Sight Gauge ..... Polyamide (Nylon)

\# 1" Port Body with 1-1/2" Port Block.

Parker Hannifin Corporation
Pneumatic Division
Richland, Michigan
www.parker.com/pneumatics

F602 Filters – Hi-Flow

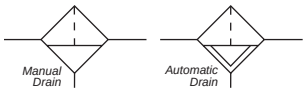

Features

- Excellent water removal efficiency
- For heavy duty applications with minimum pressure drop requirement.
- Unique deflector plate that creates swirling of the air stream ensuring maximum water and dirt separation.
- Large filter element surface guarantees low pressure drop and increased element life.
- 40 micron filter element standard, 5 micron available.
- Metal bowl with sight gauge standard.
- Twist drain as standard, optional auto drain.
- Large bowl capacity.
- Optional high capacity bowl(s) available.
- High Flow: 3/4" – 270 SCFM§
  1" – 300 SCFM§

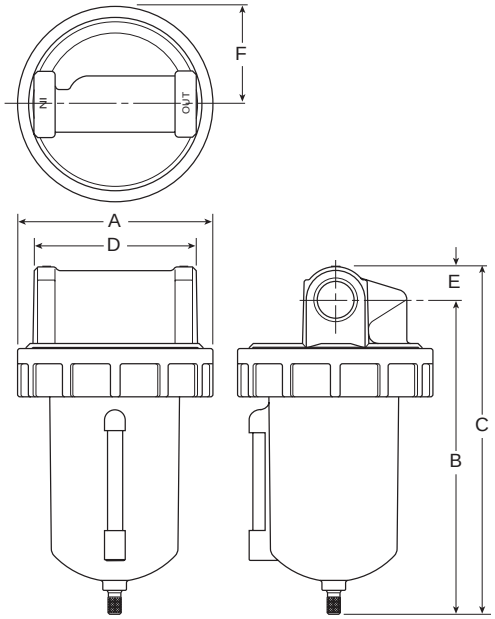

Port Size	NPT	
	Twist Drain	Internal Auto Drain
Metal Bowl / Sight Gauge - 16 oz.		
3/4"	**F602-06WJ**	**F602-06WJR**
1"	**F602-08WJ**	**F602-08WJR**
Metal Bowl without Sight Gauge - 32 oz.		
3/4"	F602-06EJ	F602-06EJR
1"	F602-08EJ	F602-08EJR

Standard part numbers shown bold.
For other models refer to ordering information below.

§ SCFM = Standard cubic feet per minute at 90 psig inlet and 5 psig pressure drop.

F602-06W, F602-08W Filter Dimensions					
A	**B**	**C**	**D**	**E**	**F**
4.90 (124)	7.88 (200)	8.72 (221)	4.06 (103)	0.84 (21)	2.45 (62)
F602-06E, F602-08E Filter Dimensions					
A	**B**	**C**	**D**	**E**	**F**
4.90 (124)	11.10 (282)	11.94 (303)	4.06 (103)	0.84 (21)	2.45 (62)

inches (mm)

Ordering Information

F	602	—	06	W	J	—	/**

Port Threads
- **— NPT**
- G BSPP

Port Size
- **06 3/4 Inch**
- **08 1 Inch**

Bowl
- E 32 oz. Large Capacity Metal without Sight Gauge
- **W 16 oz. Metal with Sight Gauge**

Element
- G 5 Micron
- **J 40 Micron**

Drains and Options
- **Blank Manual Twist Drain**
- Q External Heavy Duty Auto Drain
- **R Internal Auto Drain**
- U Semi-Auto Drain

Engineering Level
- * Will be Entered at Factory.

BOLD ITEMS ARE MOST POPULAR.

Parker Hannifin Corporation
Pneumatic Division
Richland, Michigan
www.parker.com/pneumatics

Technical Information

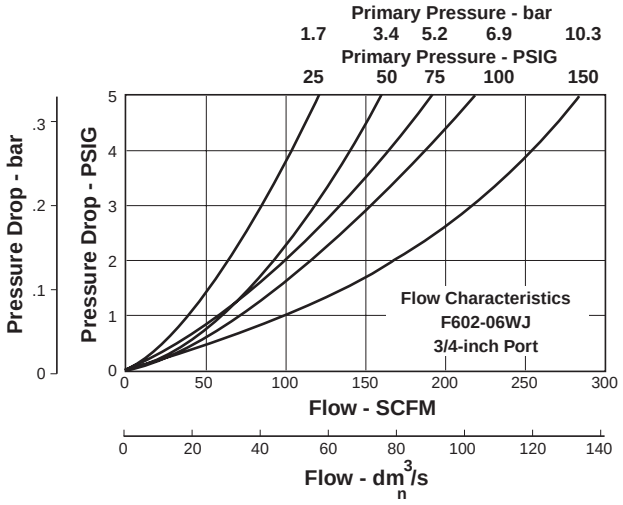

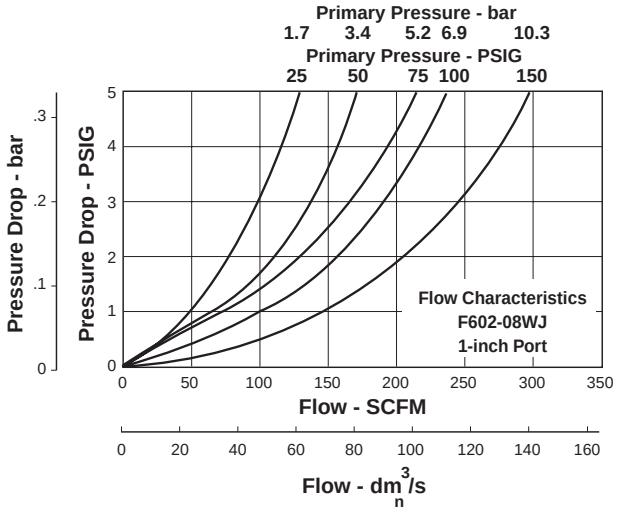

"Q" Option External Heavy Duty Auto Drain SA602D / SA603D
For heavy duty applications where the filter is being used to remove large volumes of liquid and/or particulate matter from the airstream, the external automatic drain ("Q" option) should be used.

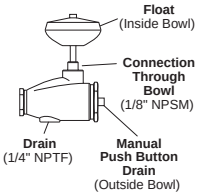

F602 Filter Kits & Accessories

Bowl Kits –
Aluminum (E) 32 oz. BK603B
Zinc with Sight Gauge (W) 16 oz. BK605WB

Drain Kits –
External Auto (E) 32 oz. SA603D
External Auto (W) 16 oz. SA602D
Internal Auto (All) SA602MD
Manual (All) SA600Y7-1
Semi-Automatic "Overnight" Drain SA602A7
(Drains automatically under zero pressure)

Filter Element Kits –
40 Micron (All) EK602B
5 Micron (All) EK602VB

Mounting Bracket Kit
(Pair or 2 Kits Pipe Mounted Brackets needed) –
(3/4" Unit) SA200AW57
(1" Unit) SA200CW57

Repair Kits –
Deflector, Baffle Assembly, and Retaining Rod (E,W) RK602B
External Auto Drain (All) RK602D
Internal Auto Drain (All) RK602MD
Metal Bowl with Sight Gauge (W) 16 oz. RKB605WB

Specifications

Bowl Capacity –
Aluminum Bowl (E) 32 oz. ..... 32 Ounces
Zinc Bowl (W) 16 oz. ..... 16 Ounces

Port Threads ..... 3/4, 1 Inch

( ) = Bowl Type

Pressure & Temperature Ratings –
Aluminum Bowl (E) 32 oz. – 0 to 300 psig (0 to 20.4 bar)
40°F to 150°F (4.4°C to 65.6°C)

Zinc (W) 16 oz. – 0 to 250 psig (0 to 17.2 bar)
40°F to 150°F (4.4°C to 65.6°C)

With Internal Auto Drain (R) – 20 to 175 psig (1.4 to 11.9 bar)
40°F to 125°F (4.4°C to 52°C)

With External Auto Drain (Q) – 0 to 250 psig (0 to 17.2 bar)
40°F to 150°F (4.4°C to 65.6°C)

Weight –
Aluminum Bowl (E) 32 oz. ..... 7 lb. (3.18 kg) / Unit
28 lb. (12.70 kg) / 4-Unit Master Pack

Zinc Bowl (W) 16 oz. ..... 6.3 lb. (2.86 kg) / Unit
25 lb. (11.34 kg) / 4-Unit Master Pack

Materials of Construction

Body ..... Zinc

Bowls –
(E) 32 oz. ..... Aluminum without Sight Gauge
(W) 16 oz. ..... Zinc with Sight Gauge

Drain –
Manual Twist & Overnight ..... Brass
Housing "R" ..... Acetal
Housing "Q" ..... Bronze

Filter Elements –
40 Micron (Standard) ..... Polypropylene
5 Micron (Optional) ..... Polypropylene

Seals ..... Nitrile

Sight Gauge ..... Nylon

Parker Hannifin Corporation
Pneumatic Division
Richland, Michigan
www.parker.com/pneumatics

F602 Filters – Hi-Flow

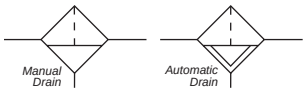

Features

- Excellent water removal efficiency
- For heavy duty applications with minimum pressure drop requirement.
- Unique deflector plate that creates swirling of the air stream ensuring maximum water and dirt separation.
- Large filter element surface guarantees low pressure drop and increased element life.
- 40 micron filter element standard, 5 micron available.
- Metal bowl with sight gauge standard.
- Twist drain as standard, optional auto drain.
- Large bowl capacity.
- Optional high capacity bowl(s) available.
- High Flow: 1-1/4" – 390 SCFM§
  1-1/2" – 450 SCFM§

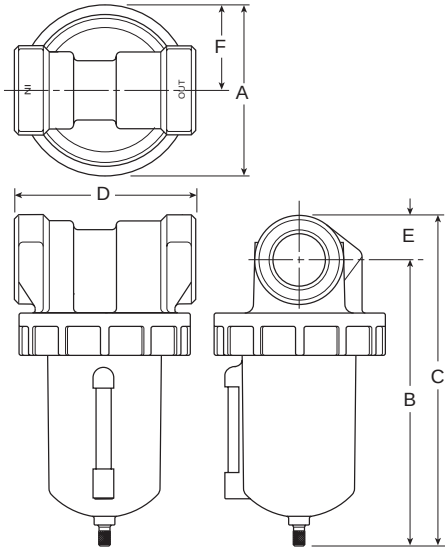

Port Size	NPT	
	Twist Drain	Internal Auto Drain
Metal Bowl / Sight Gauge - 16 oz.		
1-1/4"	**F602-10WJ**	**F602-10WJR**
1-1/2"	**F602-12WJ**	**F602-12WJR**
Metal Bowl without Sight Gauge - 32 oz.		
1-1/4"	F602-10EJ	F602-10EJR
1-1/2"	F602-12EJ	F602-12EJR

Standard part numbers shown bold.
For other models refer to ordering information below.

§ SCFM = Standard cubic feet per minute at 90 psig inlet and 5 psig pressure drop.

F602-10W, F602-12W Filter Dimensions					
A	**B**	**C**	**D**	**E**	**F**
4.90 (124)	8.18 (208)	9.46 (240)	5.19 (132)	1.28 (32.4)	2.45 (62)
F602-10E, F602-12E Filter Dimensions					
A	**B**	**C**	**D**	**E**	**F**
4.90 (124)	11.41 (290)	12.69 (322)	5.19 (132)	1.28 (32.4)	2.45 (62)

inches (mm)

Ordering Information

F	602	—	10	W	J	—	/**

Port Threads
- **— NPT**
- G BSPP

Port Size
- **10 1-1/4 Inch**
- **12 1-1/2 Inch**

Bowl
- E 32 oz. Large Capacity Metal without Sight Gauge
- **W 16 oz. Metal with Sight Gauge**

Element
- G 5 Micron
- **J 40 Micron**

Drains and Options
- **Blank Manual Twist Drain**
- Q External Heavy Duty Auto Drain
- **R Internal Auto Drain**
- U Semi-Auto Drain

Engineering Level
- * Will be Entered at Factory.

BOLD ITEMS ARE MOST POPULAR.

Parker Hannifin Corporation
Pneumatic Division
Richland, Michigan
www.parker.com/pneumatics

Technical Information

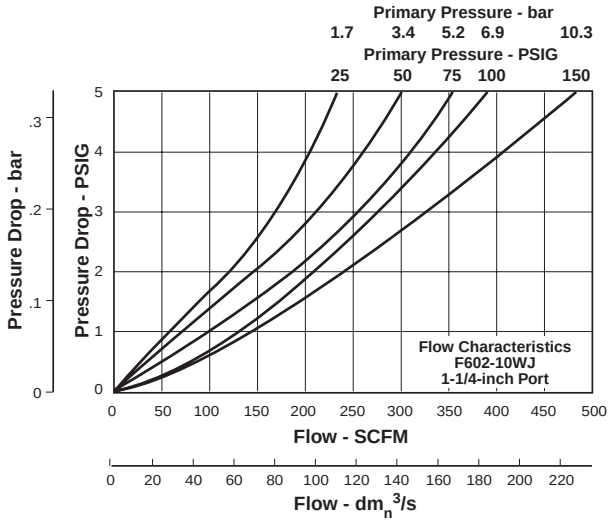

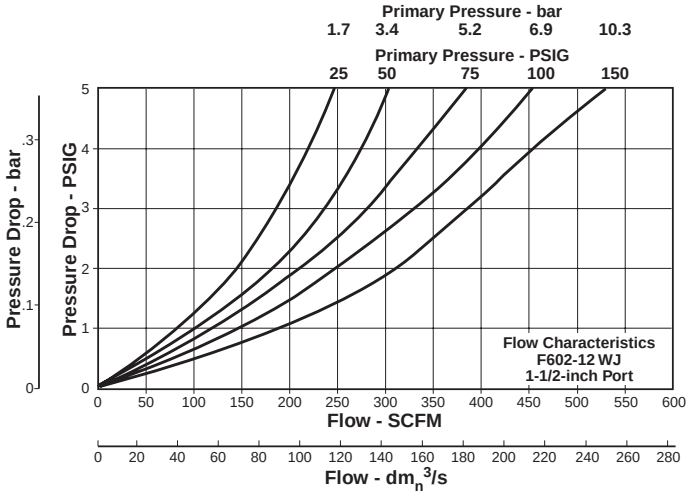

"Q" Option External Heavy Duty Auto Drain SA602D / SA603D
For heavy duty applications where the filter is being used to remove large volumes of liquid and/or particulate matter from the airstream, the external automatic drain ("Q" option) should be used.

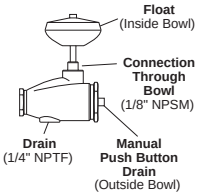

F602 Filter Kits & Accessories

Bowl Kits –
Aluminum (E) 32 oz. BK603B
Zinc with Sight Gauge (W) 16 oz. BK605WB

Drain Kits –
External Auto (E) 32 oz. SA603D
External Auto (W) 16 oz. SA602D
Internal Auto (All) SA602MD
Manual (All) SA600Y7-1
Semi-Automatic "Overnight" Drain.....SA602A7
(Drains automatically under zero pressure)

Filter Element Kits –
40 Micron (All) EK602B
5 Micron (All) EK602VB

Repair Kits –
Deflector, Baffle Assembly, and Retaining Rod (All) RK602C
External Auto Drain (All) RK602D
Internal Auto Drain (All) RK602MD
Metal Bowl with Sight Gauge (W) 16 oz. RKB605WB

Specifications

Bowl Capacity –
Aluminum (E) 32 oz. ..... 32 Ounces
Zinc (W) 16 oz. ..... 16 Ounces

Port Threads .....1-1/4, 1-1/2 Inch

( ) = Bowl Type

Pressure & Temperature Ratings –
Aluminum Bowl (E) 32 oz. – 0 to 300 psig (0 to 20.4 bar)
40°F to 150°F (4.4°C to 65.6°C)

Zinc (W) 16 oz. – 0 to 250 psig (0 to 17.2 bar)
40°F to 150°F (4.4°C to 65.6°C)

With Internal Auto Drain (R) – 20 to 175 psig (1.4 to 11.9 bar)
40°F to 125°F (4.4°C to 52°C)

With External Auto Drain (Q) – 0 to 250 psig (0 to 17.2 bar)
40°F to 150°F (4.4°C to 65.6°C)

Weight –
Aluminum Bowl (E) 32 oz. ..... 7.7 lb. (3.49 kg) / Unit
31 lb. (14.06 kg) / 4-Unit Master Pack

Zinc Bowl (W) 16 oz. ..... 7 lb. (3.18 kg) / Unit
28 lb. (12.70 kg) / 4-Unit Master Pack

Materials of Construction

Body .....Zinc

Bowls –
(E) 32 oz. ..... Aluminum without Sight Gauge
(W) 16 oz. .....Zinc with Sight Gauge

Drain –
Manual Twist & Overnight .....Brass
Housing "R".....Acetal
Housing "Q" ..... Bronze

Filter Elements –
40 Micron (Standard) ..... Polypropylene
5 Micron (Optional) ..... Polypropylene

Seals .....Nitrile

Sight Gauge .....Nylon

Parker Hannifin Corporation
Pneumatic Division
Richland, Michigan
www.parker.com/pneumatics

F602 Filters – Hi-Flow

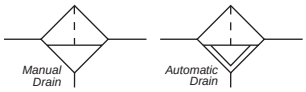

Features

- Excellent water removal efficiency
- For heavy duty applications with minimum pressure drop requirement.
- Unique deflector plate that creates swirling of the air stream ensuring maximum water and dirt separation.
- Large filter element surface guarantees low pressure drop and increased element life.
- 40 micron filter element standard.
- Metal bowl with sight gauge standard.
- Twist drain as standard, optional auto drain.
- Large bowl capacity.
- Optional high capacity bowl(s) available.
- High Flow: 2 & 2-1/2" – 1200 SCFM§

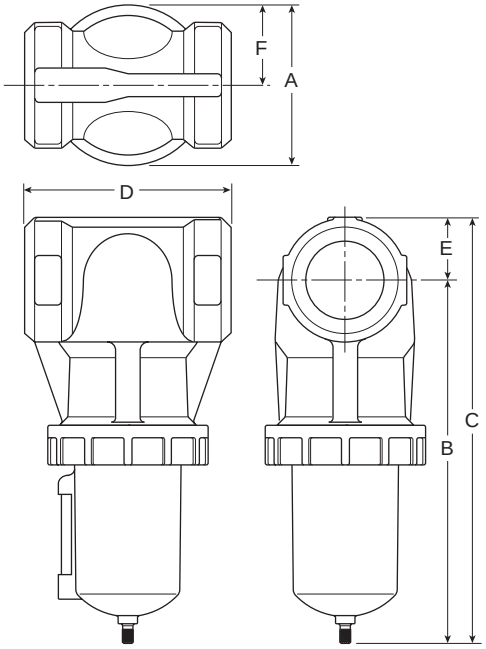

Port Size	NPT	
	Twist Drain	Internal Auto Drain
Metal Bowl / Sight Gauge - 16 oz.		
2"	**F602-16WJ**	**F602-16WJR**
2-1/2"	**F602-20WJ**	**F602-20WJR**
Metal Bowl without Sight Gauge - 32 oz.		
2"	F602-16EJ	F602-16EJR
2-1/2"	F602-20EJ	F602-20EJR

Standard part numbers shown bold.
For other models refer to ordering information below.

§ SCFM = Standard cubic feet per minute at 90 psig inlet and 5 psig pressure drop.

F602-16W, F602-20W Filter Dimensions					
A	**B**	**C**	**D**	**E**	**F**
6.30 (160)	9.16 (233)	11.08 (281)	6.30 (160)	1.92 (48.7)	3.15 (80)
F602-16E, F602-20E Filter Dimensions					
A	**B**	**C**	**D**	**E**	**F**
6.30 (160)	12.44 (316)	14.36 (365)	6.30 (160)	1.92 (48.7)	3.15 (80)

inches (mm)

Ordering Information

F	602	—	16	W	J	—	/**

Port Threads
- **— NPT**
- G BSPP

Port Size
- **16 2 Inch**
- **20 2-1/2 Inch**

Bowl
- E 32 oz. Large Capacity Metal without Sight Gauge
- **W 16 oz. Metal with Sight Gauge**

Element
- **J 40 Micron**

Drains and Options
- **Blank Manual Twist Drain**
- Q External Heavy Duty Auto Drain
- **R Internal Auto Drain**
- U Semi-Auto Drain

Engineering Level
- * Will be Entered at Factory.

BOLD ITEMS ARE MOST POPULAR.

Parker Hannifin Corporation
Pneumatic Division
Richland, Michigan
www.parker.com/pneumatics

Technical Information

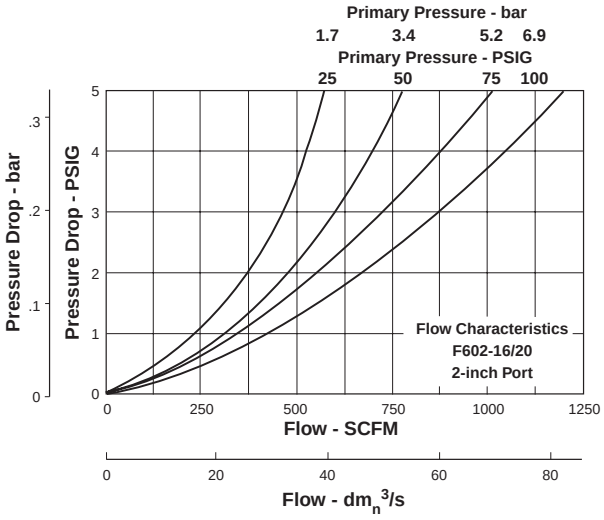

"Q" Option External Heavy Duty Auto Drain SA602D / SA603D
For heavy duty applications where the filter is being used to remove large volumes of liquid and/or particulate matter from the airstream, the external automatic drain ("Q" option) should be used.

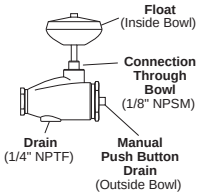

F602 Filter Kits & Accessories

Bowl Kits –
Aluminum (E) 32 oz. BK603B
Zinc with Sight Gauge (W) 16 oz. BK605WB

Drain Kits –
External Auto (E) 32 oz..... SA603D
External Auto (W) 16 oz. SA602D
Internal Auto (All) SA602MD
Manual (All) SA600Y7-1
Semi-Automatic "Overnight" Drain.....SA602A7
(Drains automatically under zero pressure)

Filter Element Kits –
40 Micron (All) EK602G

Repair Kits –
Deflector, Baffle Assembly, and Retaining Rod (All) RK602C
External Auto Drain (All) RK602D
Internal Auto Drain (All) RK602MD
Metal Bowl with Sight Gauge (W) 16 oz. RKB605WB

Specifications

Bowl Capacity –
Aluminum (E) 32 oz. ..... 32 Ounces
Zinc (W) 16 oz. ..... 16 Ounces

Port Threads .....2, 2-1/2 Inch

( ) = Bowl Type

Pressure & Temperature Ratings –
Aluminum Bowl (E) 32 oz. – 0 to 300 psig (0 to 20.4 bar)
40°F to 150°F (4.4°C to 65.6°C)

Zinc (W) 16 oz. – 0 to 250 psig (0 to 17.2 bar)
40°F to 150°F (4.4°C to 65.6°C)

With Internal Auto Drain (R) – 20 to 175 psig (1.4 to 11.9 bar)
40°F to 125°F (4.4°C to 52°C)

With External Auto Drain (Q) – 0 to 250 psig (0 to 17.2 bar)
40°F to 150°F (4.4°C to 65.6°C)

Weight –
Aluminum Bowl (E) 32 oz. ..... 10.3 lb. (4.67 kg) / Unit
11 lb. (4.99 kg) / 1-Unit Master Pack

Zinc Bowl (W) 16 oz. ..... 9.8 lb. (4.45 kg) / Unit
39 lb. (17.69 kg) / 4-Unit Master Pack

Materials of Construction

Body .....Aluminum

Bowls –
(E) 32 oz. ..... Aluminum without Sight Gauge
(W) 16 oz. .....Zinc with Sight Gauge

Drain –
Manual Twist & Overnight .....Brass
Housing "R".....Acetal
Housing "Q" ..... Bronze

Filter Elements –
40 Micron (Standard) ..... Polypropylene

Seals .....Buna N

Sight Gauge .....Nylon

Parker Hannifin Corporation
Pneumatic Division
Richland, Michigan
www.parker.com/pneumatics

09F Filters – Hi-Flow

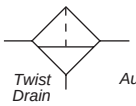

Features

- Metal bowl standard.
- 5 micron element.
- Large capacity bowl.
- Standard differential pressure indicator.
- High Flow: 2" – 1000 SCFM§

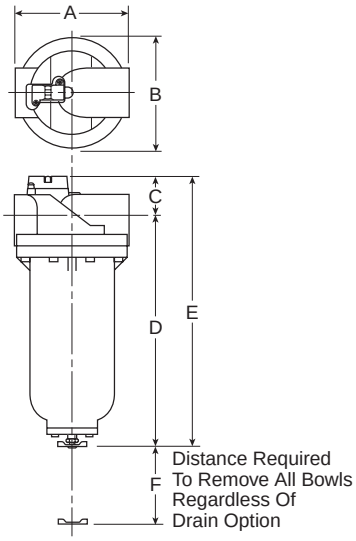

Port Size	NPT	
	Twist Drain	Automatic Float Drain
2"	**09F83B***	**09F87B***

Standard part numbers shown bold.
For other models refer to ordering information below.

§ SCFM = Standard cubic feet per minute at 90 psig inlet and 5 psig pressure drop.

09F Filter Dimensions		
A	**B**	**C**
7.80 (198)	7.75 (197)	2.83 (72)
D†	**E†**	**F**
16.24 (412)	19.07 (484)	4.92 (125)

Inches (mm)

† With Twist Drain or Automatic Float Drain

Ordering Information

09F	8	3	B	*

Port Size
8 2 Inch

Bowl Options
3 Metal / Twist Drain
7 Metal / Automatic Float Drain

Elements
B 5 Micron

Engineering Level
* Will be Entered at Factory.

BOLD ITEMS ARE MOST POPULAR.

Parker Hannifin Corporation
Pneumatic Division
Richland, Michigan
www.parker.com/pneumatics

Technical Information

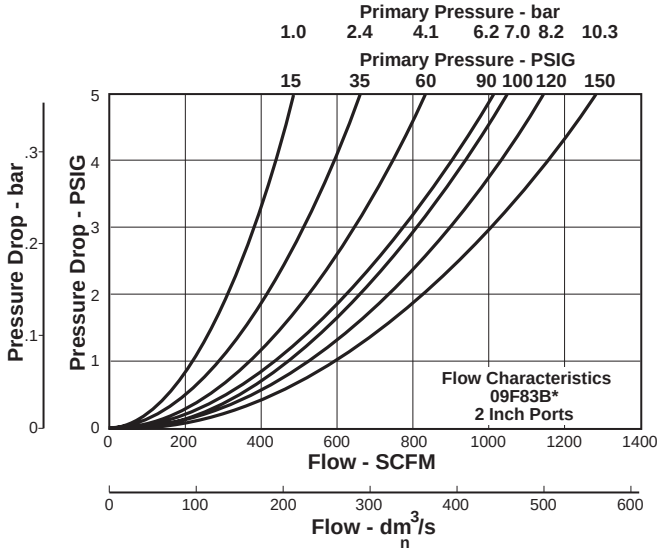

09F Filter Kits & Accessories

Differential Pressure Indicator PS619P

Drain Kits –
Automatic Float Drain PS620P
Twist Drain PS625P

Filter Element Kit – 5 Micron Element..... PS618P

Specifications

Bowl Capacity ..... 117 Ounces

Sump Capacity ..... 12.5 Ounces

Port Threads ..... 2 Inch

Pressure & Temperature Ratings ..... 150 psig at 150°F (10.3 bar at 66°C)

Weight ..... 19.3 lb. (8.7 kg)

Materials of Construction

Body ..... Aluminum

Bowls ..... Metal

Deflector ..... Steel

Drains –
Twist Drain ..... Brass Petcock
Automatic Float Drain –
Housing, Float ..... Plastic
Seals ..... Buna N
Springs, Push Rod ..... Stainless Steel

Filter Element ..... Plastic

Seals ..... Fluorocarbon

Parker Hannifin Corporation
Pneumatic Division
Richland, Michigan
www.parker.com/pneumatics

Coalescing Filters

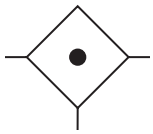

- Pipe Sizes 1/8 thru 3 Inch
- Flows to 1660 SCFM
- Pressures to 250 psig

Coalescing filters are designed to remove 99.9% + of the liquid aerosols, both water and oil, and submicron particulate matter from your pneumatic system. These filters will provide oil free air for applications such as spray painting, air gauging, pneumatic instrumentation, printing and packaging.

- Miniature 02F Series, 1/4 Inch I.D.
- Miniature 10F Series, 1/8 and 1/4 Inch
- Economy 15F Series, 1/4 and 3/8 Inch
- Compact 11F Series, 1/4, 3/8 and 1/2 Inch
- Standard 12F Series, 3/8, 1/2 and 3/4 Inch
- High Flow P3NF Series, 3/4, 1 and 1-1/2 Inch
- High Flow F701 Series, 3/4 & 1 Inch
- Main Line 30F Series, 1-1/2 thru 3 Inch
- Inline Desiccant Dryers DD Series, 1/4 thru 1 Inch

Filter Selection

1. Determine flow and pressure requirements.
2. Refer to Flow Chart and select the proper filter to match your flow and pressure needs.

Media Specifications

Grade	Coalescing Efficiency 0.3 to 0.6 Micron Particles	Maximum Oil Carryover[1] PPM w/w	Micron Rating	Pressure Drop (PSID)[2] @ Rated Flow	
				Media Dry	Media Wet With 10-20 wt. oil
6	99.97%	0.008	0.01	1.0	2-3
10	95%	0.85	1.0	0.5	0.5

[1] Tested per BCAS 860900 at 40 ppm inlet.
[2] Add dry + wet for total pressure drop.
D.O.P. = Dioctylphthalate

Element Selection

Element Grade	Applications
6 (.01 Micron)	General air coalescing applications when total removal of liquid aerosols and suspended fines is required in all pressure ranges. Protection of air dryers, air gauging, air logic, modulating systems, critical air conveying, most breathing air systems, etc.
10 (.7 Micron)	Precoalescer or prefilter for Grade 6 to remove gross amounts of water and oil, or tenacious aerosols which are difficult to remove. Upgrading existing particulate equipment to coalescing without increase in pressure drop.

Reading Nomograms for Coalescing Filters

To size a coalescer, refer to the nomograms below. First determine the system pressure and find that pressure on the vertical axis on the left. Next, find the required flow rate on the middle vertical axis. Draw a connecting line between the two points extending to the middle vertical axis giving the recommended coalescer series. If the intersection on the model number axis is between models then choose the model above the intersection point insuring the proper flow in the unit.

Media Grade: 6C Coalescer

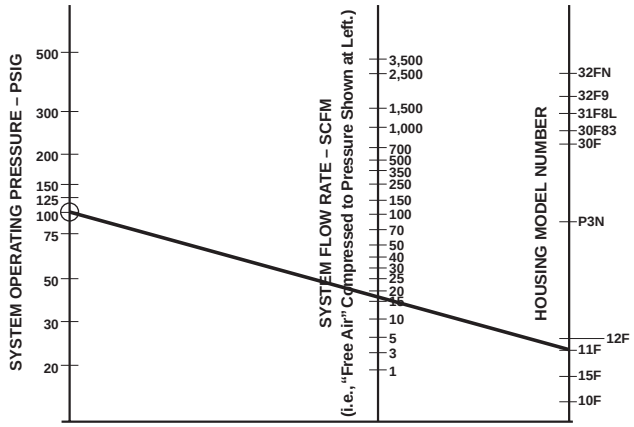

Media Grade: 10C Coalescer

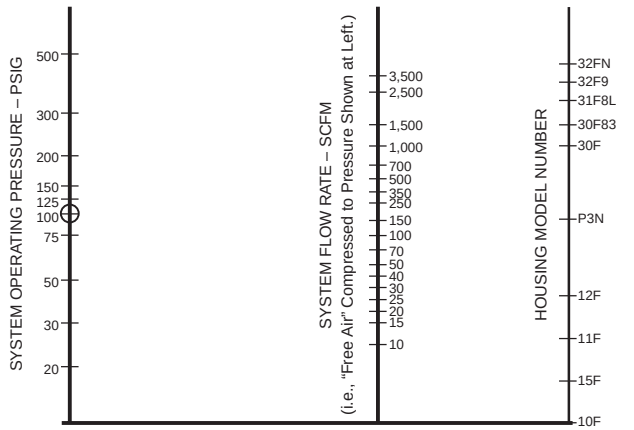

Parker Hannifin Corporation
Pneumatic Division
Richland, Michigan
www.parker.com/pneumatics

Coalescing Filters (Oil Removal)

Specifically designed for the removal of solid particles, water and oil aerosols down to 0.01 micron. Maximum remaining oil content of air leaving the filter down to 0.01ppm at 70°F (21°C) at a pressure of 100 psig (6.9 bar) using a typical compressor lubricant. Two filter element grades are offered to better meet your air quality requirements.

Grade 10 filter elements are used for most air coalescing applications where the removal of liquid aerosols and submicronic particles for general air quality is required. Protection of components such as air valves, cylinders, as well as air conveyors, air gaging, air bearings, air control circuits and paint spraying equipment are examples of specific end-use applications. This grade of filter element should be used as a prefilter for the Grade C coalescing filter.

Grade 6 high-efficiency filter elements are used where the removal of extremely fine particulate and virtually “oil-free” or high quality air is necessary. Specific end-use applications are protection of critical air control circuits, air logic systems, flow and temperature controllers, food processing, electronics, health care and film processing.

The contaminated air enters the element interior and is forced through a thick membrane of borosilicate glass fibers coated with epoxy (**A**). Flow then passes through an outer structural support and, at this stage, has removed up to 99.97% + of the sub-micron particles evident in the contaminated air. These tiny droplets coalesce together and are blotted from the filter surface by the drain and release layers of non-woven glass felt and rayon cloth. The drops now begin a gravitational passage to the filter sump (**B**) where they can be manually or automatically drained. The clean, filtered air now passes through the outer screen plastic net and out into the pneumatic system. The Air Line Coalescing Filter removes liquid aerosols and sub-micron particulate matter. Collected liquids and particles in the “quiet zone” should be drained before their level reaches a height where they would be reentrained in the flowing air. This can be accomplished by the manual drain (**C**) which is actuated by twisting knob (**D**) counterclockwise. On the 30 Series, unscrew the drain valve (**E**) slightly until the liquid begins to drain.

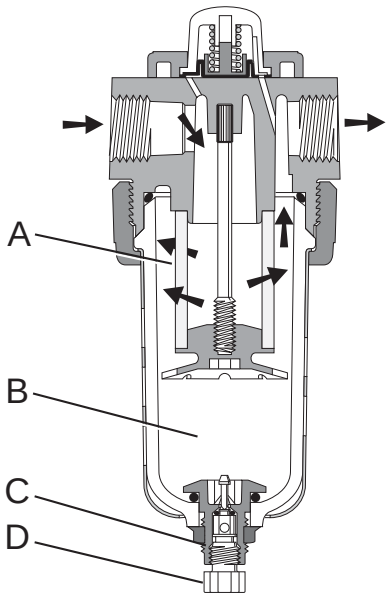

Semi Automatic Drain

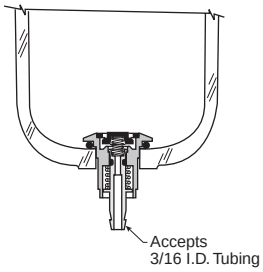

(Overnight Drain)

This drain offers a semi-automatic function when there is a differential pressure in the filter which occurs when system pressure is shut off. The drain can also be used manually by gripping it with your fingertips and pushing upward.

Automatic Pulse Drain

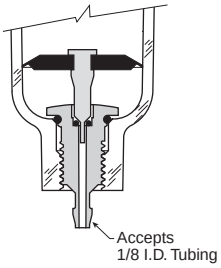

(Spitter Drain)

The diaphragm in this drain pulses when there is a pressure differential such as a valve cycling or cylinder stroking downstream. This action flexes the diaphragm and allows the filter to drain the entrapped water.

Automatic Float Drain

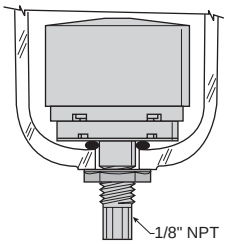

The float internal to this drain rises with increased liquid level. When the float rises, it opens a seat area allowing the trapped liquids to drain through the bottom.
A manual override can be pushed in the bottom of the drain to unseat the float if particulates create a block.

Parker Hannifin Corporation
Pneumatic Division
Richland, Michigan
www.parker.com/pneumatics

Filter Technology – Mechanisms of Filtration

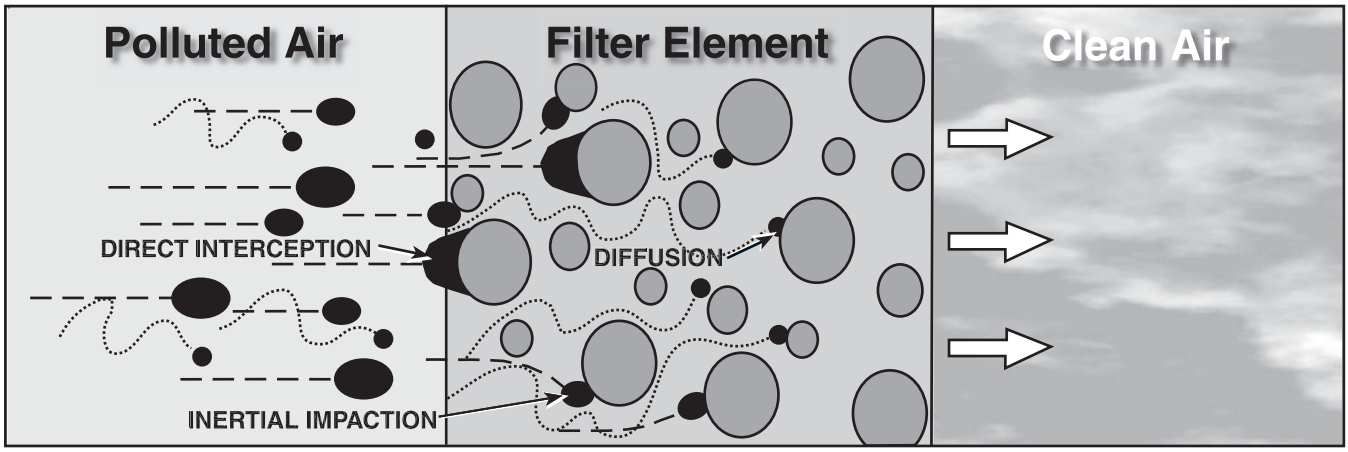

Coalescing Filters

Essentially, coalescing filters Grade 10 (.7 micron) & 6 (.01 micron), rely on what is known as mechanical filtration for their effectiveness. The main mechanisms of mechanical filtration are direct interception, inertial impaction and diffusion. Electrostatic attraction can have some bearing although the efficiency of coalescing filters is not dependent on this mechanism.

Direct Interception occurs when a particle collides with and adheres to a fiber of the filter material without deviating out of the streamline flow. This mechanism tends to take place on the surface of the filter material and affects mainly larger particles over 1 micron in size.

Inertial Impaction occurs when a particle is unable to follow the tortuous path around the filter fibers and eventually collides with and adheres to one of the fibers. Typically affecting particles in the 0.3 micron -1 micron size range.

Diffusion or Brownian Movement, as it is sometimes called, occurs with extremely small particles which tend to wander within the gas stream, increasing their chances of colliding with and adhering to a fiber. This usually affects particles below 0.3 micron in size. A degree of overlap takes place with the mechanisms, the extent varying on the conditions.

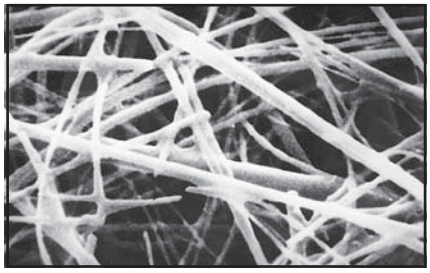

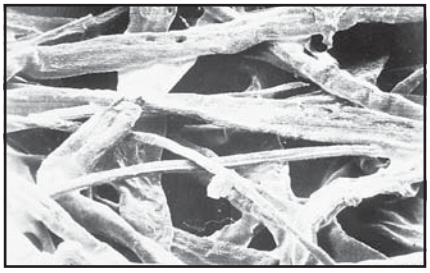

Above: Clean borosilicate microfiber seen at a magnification factor of 3900. *Right:* The same filter material in a contaminated state at the same degree of magnification.

When all mechanisms are combined and utilized by a deep bed of the correct type of filter material, removal of virtually all particles whether liquid or solid, is achieved.

Pollution Size Chart

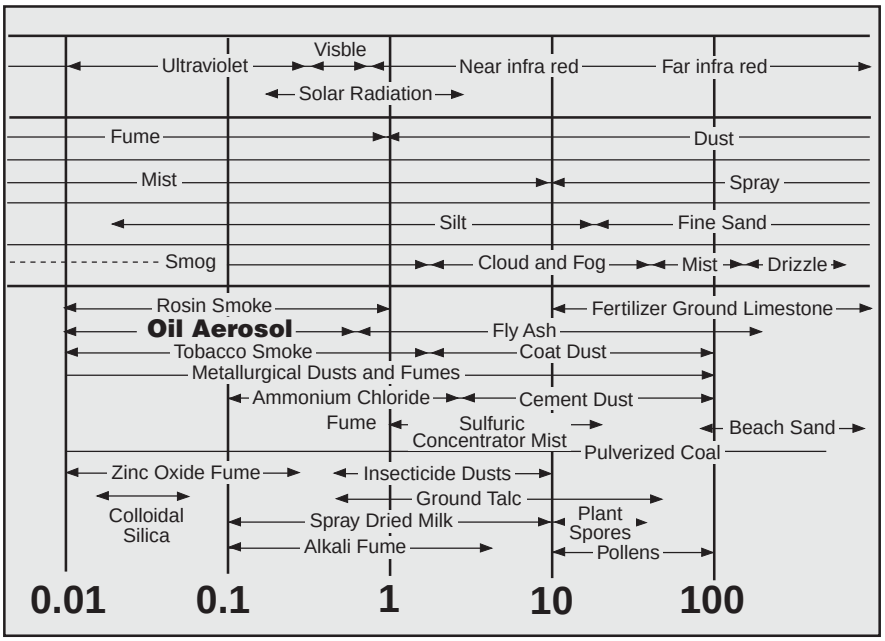

To assist in understanding the parameters of filtration, refer to this pollution size comparison chart. Look at the size of a major contaminant, oil aerosol! It is in the region of 0.01 - 0.8 micron. Tobacco smoke is also a liquid aerosol in a similar size band 0.01 -1.2 micron. Observe the smoke test yourself, appreciate the size of the problem! The smallest particle the human eye can see is in the order of 40 microns.

Parker Hannifin Corporation
Pneumatic Division
Richland, Michigan
www.parker.com/pneumatics

02F Coalescing Filters – Miniature

Features

- Clear nylon housing.
- Full length support tube.
- Positive tube seals.
- Optional filter grades available.
- Disposable.
- High Flow: Grade 6 – 3.5 SCFM§
  Grade 10 – 5.3 SCFM§

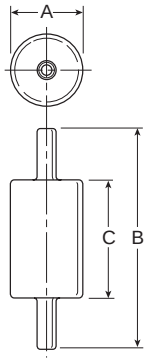

Application

The 02F Miniature Inline Filter is designed to remove 99.9%+ of the aerosols and sub-micron particles from your air system.

Port Size	Model	Element
1/4" I.D.	**02FA06A**	Grade 6
	02FA10A	Grade 10
	02FA22A	Grade 6 (oil activated dye)

§ SCFM @ 1 PSID Operating Pressure 100 psig.

02F Coalescing Filter Dimensions		
A	**B**	**C**
1.00 (25)	3.28 (83)	1.69 (43)

Inches (mm)

Operation

The contaminated air enters the filters interior and is forced through the elements membrane of Borosilicate glass fibers. Contaminants and aerosols are collected and distributed evenly along the entire tubes length. This is accomplished by the use of the “center post” which not only provides this “drop out pocket”, but also provides a stable support.

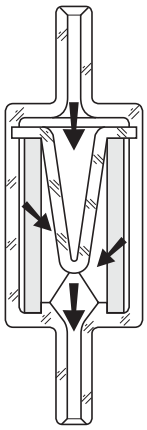

Ordering Information

02F	A	06	A

Port Size
A Standard

Elements
06 Grade 6
10 Grade 10
22 Grade 6 oil activated dye

Engineering Level
A Current

Specifications

Port Size ..... 1/4 I.D. Hose Slip On Tang Standard
Pressure & Temperature Ratings –
100 psig at 125°F (0.69 bar at 52°C) or less

Materials of Construction

Element ..... Borosilicate & Felt Glass Fibers
Housing ..... Nylon

Parker Hannifin Corporation
Pneumatic Division
Richland, Michigan
www.parker.com/pneumatics

10F Coalescing Filters – Miniature

Features

- Removes liquid aerosols and sub-micron particles.
- Liquids gravitate to the bottom of the element and will not re-enter the airstream.
- Oil free air for critical applications, such as air gauging and pneumatic instrumentation and controls.
- Interchangeable twist and automatic pulse drains.
- Grade 6 element, 99.97% DOP efficiency.
- High Flow: Grade 6 Element
  1/8" – 17 SCFM§
  1/4" – 20 SCFM§
  Grade 10 Element
  1/8" – 19 SCFM§
  1/4" – 24 SCFM§

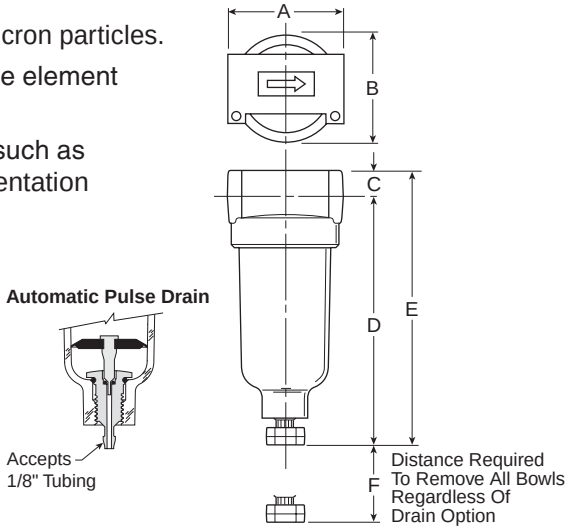

Port Size	NPT	
	Twist Drain	Automatic Pulse Drain
Poly Bowl ‡		
1/8"	**10F01E***	**10F05E***
1/4"	**10F11E***	**10F15E***
Metal Bowl without Sight Gauge		
1/8"	**10F03E***	**10F07E***
1/4"	**10F13E***	**10F17E***

Standard part numbers shown bold, with Grade 6 Elements (for Grade 10 Elements, replace "E" with "H" in the 6th position). For other models refer to ordering information below.

‡ For polycarbonate bowl see Caution on page C2.

§ SCFM = Standard cubic feet per minute at 90 psig inlet and 5 psig pressure drop.

10F Coalescing Filter Dimensions		
A 1.69 (43)	**B** 1.56 (39,6)	**C** 0.39 (10)
D 3.82 (97)	**D†** 3.67 (93)	**E** 4.21 (107)
E† 4.06 (103)	**F** 1.60 (41)	

Inches (mm)

† With Automatic Pulse Drain.

Ordering Information

10F	1	1	E	*	—

Port Size
- **0 1/8 Inch**
- **1 1/4 Inch**

Bowl Options
- Polycarbonate Bowl
- **1 Twist Drain**
- **5 Automatic Pulse Drain**
- Metal Bowl
- **3 Twist Drain**
- **7 Automatic Pulse Drain**

Elements
- **E Grade 6**
- H Grade 10

Engineering Level
- * Will be Entered at Factory

Port Type
- **Blank NPT**
- 1 BSPP
- 2 BSPT

BOLD ITEMS ARE MOST POPULAR.

Parker Hannifin Corporation
Pneumatic Division
Richland, Michigan
www.parker.com/pneumatics

Technical Information

Grade 6

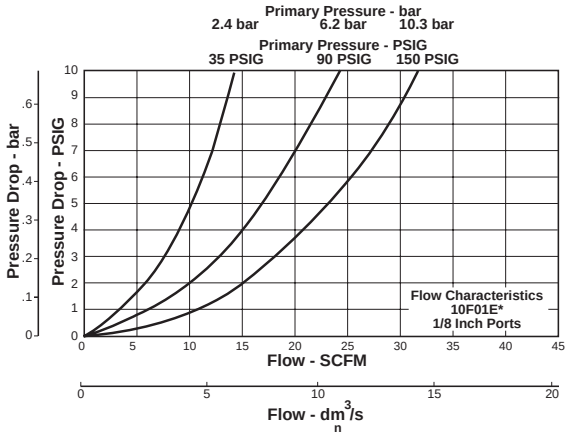

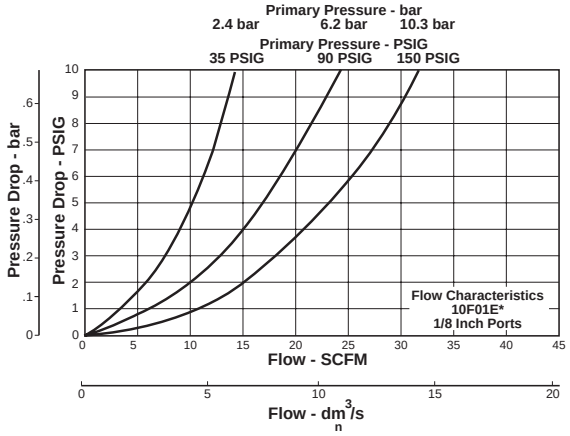

Grade 10

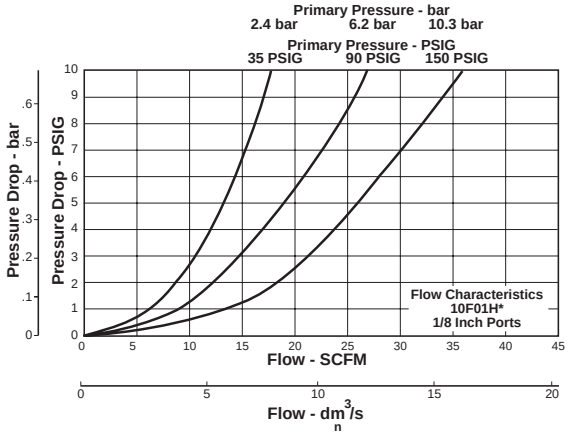

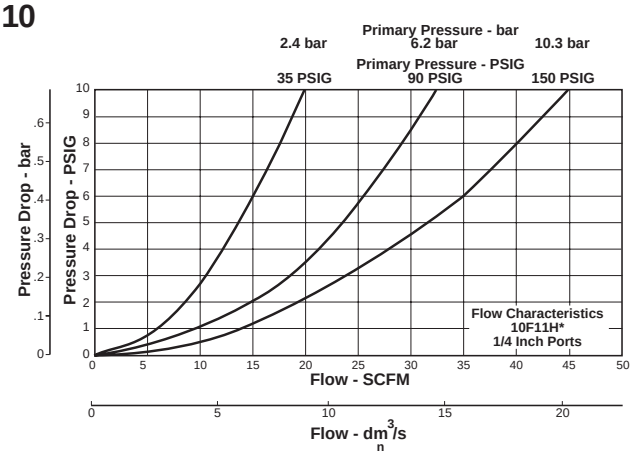

10F Coalescing Filter Kits & Accessories

Bowl Kits –
Poly Bowl – Automatic Pulse Drain PS408BP
Twist Drain PS404P
Metal Bowl – Automatic Pulse Drain PS451BP
Twist Drain PS447BP

Filter Element Kits – Grade 6 (Standard)..... PS446P
Grade 10 (Optional) PS456P

Mounting Bracket Kit PS417BP

Specifications

Automatic Pulse Drain Tube Barb..... 1/8 Inch

Bowl Capacity ..... 1 Ounce

Operation –
Normal Operating Pressure Drop ..... 2 psig
Maximum Recommended Pressure Drop ..... 10 psig
(Element should be replaced)

Port Threads ..... 1/8, 1/4 Inch

Pressure & Temperature Ratings –
Polycarbonate Bowl ..... 0 to 150 psig (0 to 10.3 bar)
32°F to 125°F (0°C to 52°C)
Metal Bowl..... 0 to 250 psig (0 to 17.2 bar)
32°F to 175°F (0°C to 80°C)
Automatic Pulse Drain ..... 10 to 250 psig (0.7 to 17.2 bar)
at 125°F (52°C) or less

Weight ..... 0.41 lb. (0.18 kg)

Materials of Construction

Body ..... Zinc

Bowls ..... Transparent Polycarbonate
Metal (Zinc) Without Sight Gauge

Drains – Twist Drain –
Body & Stem ..... Plastic
Seals ..... Nitrile
Automatic Pulse Drain –
Piston & Seals..... Nitrile
Stem, Seat, Adaptor & Washers..... Aluminum

Element Holder ..... Plastic

Filter Element –
Borosilicate & felt glass fibers 99.97% DOP efficiency
Largest Aerosol Particle Passed (Grade 6) ..... 0.01 Micron
Largest Solid Particle Passed (Grade 6)..... 0.30 Micron

Seals ..... Nitrile

Parker Hannifin Corporation
Pneumatic Division
Richland, Michigan
www.parker.com/pneumatics

15F Coalescing Filters – Economy

Features

- Removes liquid aerosols and sub-micron particles.
- Liquids gravitate to the bottom of the element and will not re-enter the airstream.
- Oil free air for critical applications, such as air gauging and pneumatic instrumentation and controls.
- Interchangeable twist and automatic pulse drains.
- Differential pressure indicator standard.
- High Flow: Grade 6 Element 1/4" – 30 SCFM § 3/8" – 30 SCFM §; Grade 10 Element 1/4" – 51 SCFM§ 3/8" – 66 SCFM§

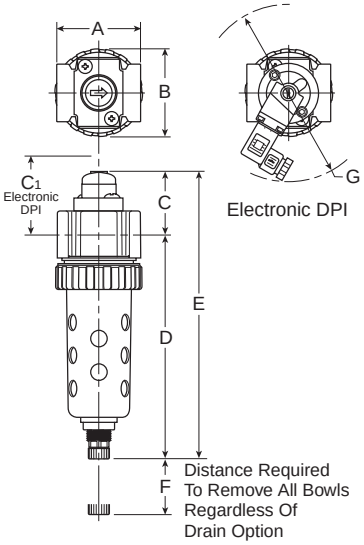

Port Size	NPT	
	Twist Drain	Automatic Pulse Drain
Poly Bowl‡ / Metal Guard		
1/4"	**15F12E***	**15F1PE***
3/8"	**15F22E***	**15F2PE***
Metal Bowl / Sight Gauge		
1/4"	**15F14E***	**15F1TE***
3/8"	**15F24E***	**15F2TE***

Standard part numbers shown bold, with Grade 6 Elements (for Grade 10 Elements, replace "E" with "H" in the 6th position). For other models refer to ordering information below.

‡ For polycarbonate bowl see Caution on page C2.

§ SCFM = Standard cubic feet per minute at 90 psig inlet and 5 psig pressure drop.

Automatic Drain

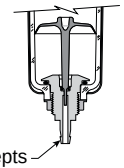

Accepts 1/8" Tubing

15F Coalescing Filter Dimensions		
A 2.00 (51)	**B** 2.06 (52)	**C** 1.50 (38)
C1 1.86 (47)	**D** † 5.35 (136)	**E** † 6.85 (174)
F 1.77 (45)	**G Dia.** 4.50 (114)	

Inches (mm)

† With Twist Drain or Automatic Float Drain

Ordering Information

15F	1	2	E	*	—	—

Port Size
- **1 1/4 Inch**
- **2 3/8 Inch**

Bowl Options

Polycarbonate Bowl	Metal Bowl
1 Twist Drain	3 Twist Drain
2 Metal Bowl Guard / Twist Drain	**4 Sight Gauge / Twist Drain**
N Auto Pulse Drain	R Auto Pulse Drain
P Metal Bowl Guard / Auto Pulse Drain	**T Sight Gauge / Auto Pulse Drain**

Elements
- **E Grade 6**
- H Grade 10

Engineering Level
- * Will be Entered at Factory

Port Type
- **Blank NPT**
- 1* BSPP
- 2 BSPT

* 1/4 & 3/8 inch meet ISO 1179-1 Standard.

Options
- **Blank With Differential Pressure Indicator**
- N Without Differential Pressure Indicator
- R With Electronic DPI

BOLD ITEMS ARE MOST POPULAR.

Parker Hannifin Corporation
Pneumatic Division
Richland, Michigan
www.parker.com/pneumatics

Technical Information

Grade 6

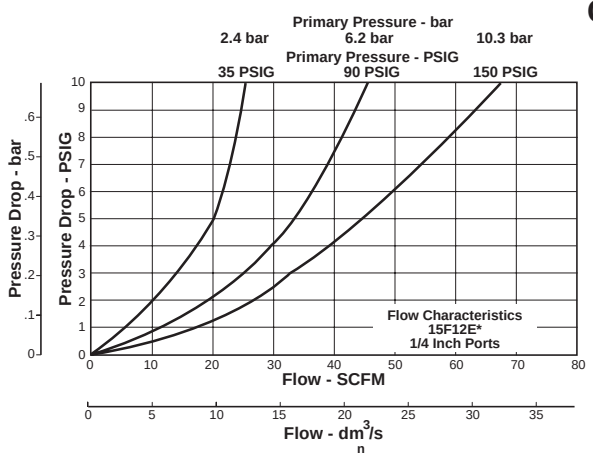

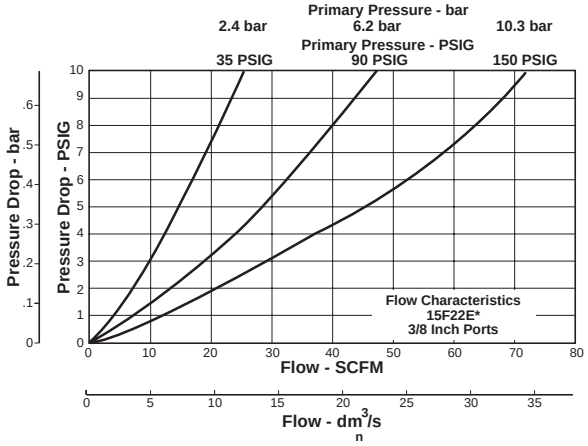

Grade 10

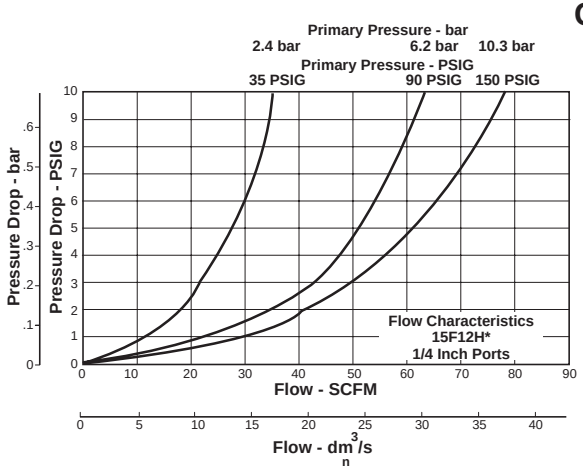

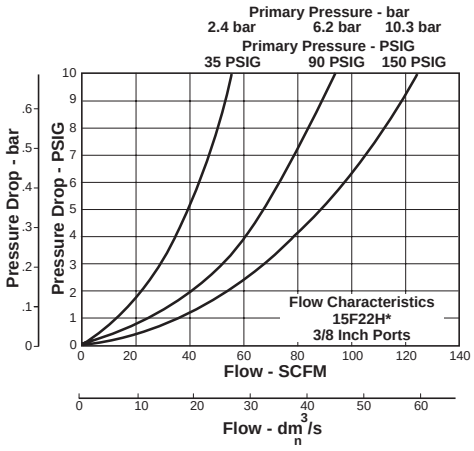

15F Coalescing Filter Kits & Accessories

Bowl Guard Kit PS905P

Bowl Kits –

Poly Bowl – Automatic Pulse Drain PS995P
Twist Drain PS932P

Metal Bowl – Automatic Pulse Drain PS997P
Twist Drain PS934P
Sight Gauge / Automatic Pulse Drain PS996P
Sight Gauge / Twist Drain PS935P

DPI Replacement Kit PS781P

Electronic DPI Replacement Kit PS764

Drain Kit – Automatic Pulse Drain PS998P
Semi-Auto Drain PS511P
Twist Drain PS512P
Push 'N' Drain PS513P

Electrical Connector - 15mm, 3-Pin DIN, 6 Ft. Cord PS2932JBP

Filter Element Kits – Grade 6 (Standard) PS924P
Grade 10 (Optional) PS930P

Mounting Bracket Kit PS943P

Sight Gauge Kit PS914P

Specifications

Bowl Capacity ..... 2.0 Ounces

Sump Capacity ..... 0.9 Ounce

Port Threads ..... 1/4, 3/8 Inch

Pressure & Temperature Ratings –

Without Differential Pressure Indicator:

Polycarbonate Bowl – 0 to 150 psig (0 to 10.3 bar)
32°F to 125°F (0°C to 52°C)

Metal Bowl – 0 to 250 psig (0 to 17.2 bar)
32°F to 175°F (0°C to 80°C)

With Differential Pressure Indicator: 0 to 150 psig (0 to 10.3 bar)
32°F to 125°F (0°C to 52°C)

Weight ..... 1.2 lb. (0.54 kg)

Materials of Construction

Body ..... Zinc

Bowls ..... Transparent Polycarbonate
Metal (Zinc) Without Sight Gauge

Bowl Guards ..... Steel

Collar ..... Plastic

Drain ..... Plastic

Filter Element –

Borosilicate & felt glass fibers 99.97% DOP efficiency

Largest Aerosol Particle Passed (Grade 6) ..... 0.01 Micron

Largest Solid Particle Passed (Grade 6) ..... 0.30 Micron

Seals ..... Nitrile

Sight Gauge, DPI ..... Polyamide (Nylon)

Parker Hannifin Corporation
Pneumatic Division
Richland, Michigan
www.parker.com/pneumatics

11F Coalescing Filters – Compact

Features

- Removes liquid aerosols and sub-micron particles.
- Liquids gravitate to the bottom of the element and will not re-enter the airstream.
- Oil free air for critical applications, such as air gauging and pneumatic instrumentation and controls.
- Interchangeable twist and automatic float drains.
- Differential pressure indicator standard.
- Shown with recommended metal bowl guard.
- High Flow: Grade 6 Element 1/4" – 45 SCFM§, 3/8" – 48 SCFM§, 1/2" – 65 SCFM§; Grade 10 Element 1/4" – 60 SCFM§, 3/8" – 72 SCFM§, 1/2" – 95 SCFM§

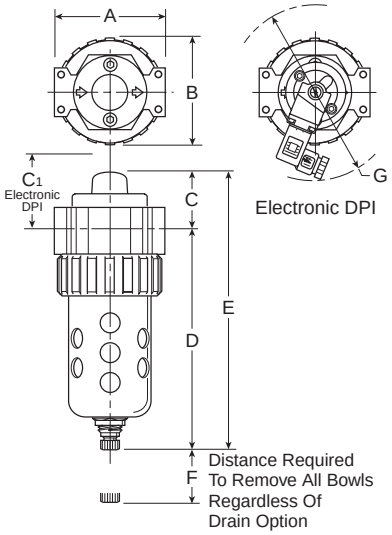

Port Size	NPT	
	Twist Drain	Automatic Float Drain
Poly Bowl ‡ / Metal Guard		
1/4"	**11F12E***	**11F16E***
3/8"	**11F22E***	**11F26E***
1/2"	**11F32E***	**11F36E***
Metal Bowl / Sight Gauge		
1/4"	**11F14E***	**11F18E***
3/8"	**11F24E***	**11F28E***
1/2"	**11F34E***	**11F38E***

Standard part numbers shown bold, with Grade 6 Elements (for Grade 10 Elements, replace "E" with "H" in the 6th position). For other models refer to ordering information below.

‡ For polycarbonate bowl see Caution on page C2.

§ SCFM = Standard cubic feet per minute at 90 psig inlet and 5 psig pressure drop.

11F Coalescing Filter Dimensions		
A 2.81 (71)	**B** 2.74 (70)	**C** 1.46 (37)
C_1 1.81 (46)	**D** 5.69 (145)	**D †** 5.74 (146)
E 7.15 (182)	**E †** 7.20 (183)	**F** 2.25 (57)
G Dia. 4.50 (114)		

Inches (mm)

† With Automatic Float Drain

Ordering Information

11F	1	2	E	*	—	—

Port Size
- **1 1/4 Inch**
- **2 3/8 Inch**
- **3 1/2 Inch**

Bowl Options

Polycarbonate Bowl	Metal Bowl
1 Twist Drain	3 Twist Drain
2 Metal Bowl Guard / Twist Drain	**4 Sight Gauge / Twist Drain**
5 Auto Float Drain	7 Auto Float Drain
6 Metal Bowl Guard / Auto Float Drain	**8 Sight Gauge / Auto Float Drain**

Elements
- **E Grade 6**
- H Grade 10

Engineering Level
- * Will be Entered at Factory

Options
- **Blank With Differential Pressure Indicator**
- N Without Differential Pressure Indicator
- R With Electronic DPI

Port Type
- **Blank NPT**
- 1* BSPP
- 2 BSPT

* 1/4 & 3/8 inch meet ISO 1179-1 Standard.

BOLD ITEMS ARE MOST POPULAR.

Parker Hannifin Corporation
Pneumatic Division
Richland, Michigan
www.parker.com/pneumatics

Technical Information

Grade 6

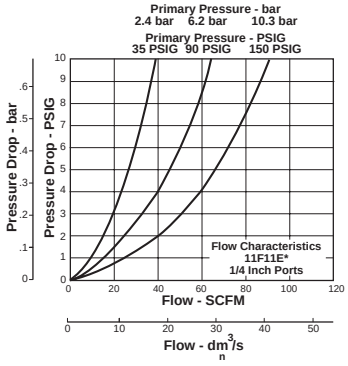

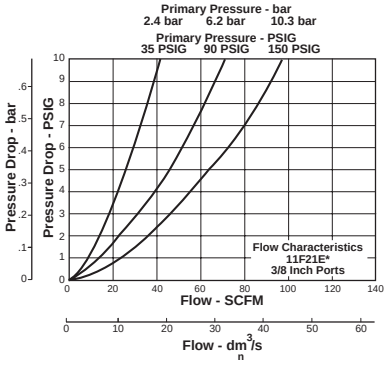

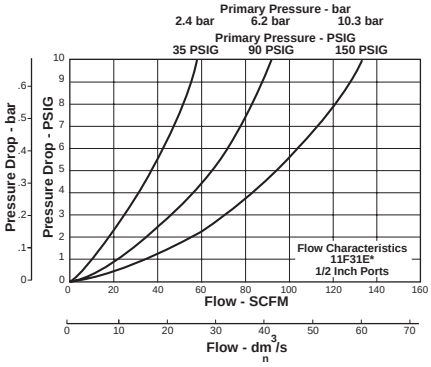

Grade 10

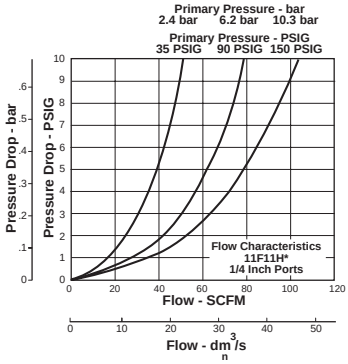

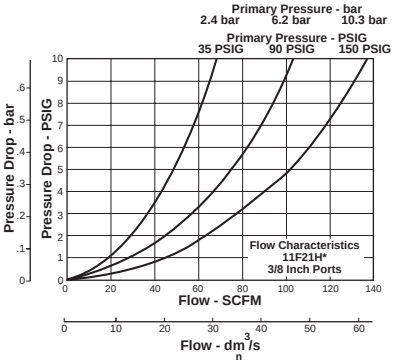

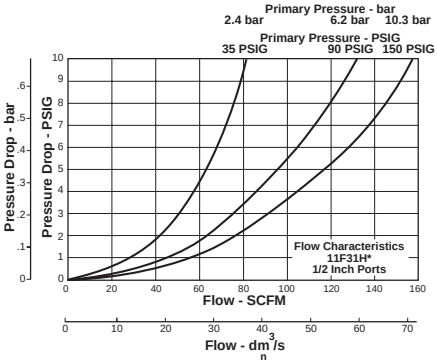

11F Coalescing Filter Kits & Accessories

Bowl Guard Kit PS705P

Bowl Kits –

Poly Bowl – Automatic Float Drain PS722P
Twist Drain PS732P

Metal Bowl – Automatic Float Drain PS726P
Twist Drain PS734P
Sight Gauge / Automatic Float Drain PS723P
Sight Gauge / Twist Drain PS735P

DPI Replacement Kit PS781P

Electronic DPI Replacement Kit PS764

Drain Kits – Automatic Float Drain PS506P
Semi-Auto Drain PS511P
Twist Drain PS512P
Push 'N' Drain PS513P

Electrical Connector - 15mm, 3-Pin DIN, 6 Ft. Cord PS2932JBP

Filter Element Kits – Grade 6 (Standard) PS724P
Grade 10 (Optional) PS730P

Mounting Bracket Kit PS743P

Sight Gauge Kit PS914P

Specifications

Bowl Capacity ..... 4.4 Ounces

Sump Capacity ..... 1.75 Ounces

Operation – Normal Operating Pressure Drop ..... 2 psig
Maximum Recommended Pressure Drop ..... 10 psig
(Element should be replaced)
Minimum Recommended Flow –
20% Nominal Rating of Element

Port Threads ..... 1/4, 3/8, 1/2 Inch

Pressure & Temperature Ratings –
Without Differential Pressure Indicator:
Polycarbonate Bowl – 0 to 150 psig (0 to 10.3 bar)
32°F to 125°F (0°C to 52°C)
Metal Bowl – 0 to 250 psig (0 to 17.2 bar)
32°F to 175°F (0°C to 80°C)
With Differential Pressure Indicator – 0 to 150 psig (0 to 10.3 bar)
32°F to 125°F (0°C to 52°C)
Automatic Float Drain – 15 to 250 psig (1.0 to 17.2 bar)

Weight ..... 1.5 lb (0.7 kg)

Materials of Construction

Body ..... Zinc

Bowls ..... Transparent Polycarbonate
Metal (Zinc) With or Without Sight Gauge

Bowl Guard ..... Steel

Collar ..... Plastic

Drains – Twist Drain – Body & Nut ..... Plastic
Push 'N' Drain – Body ..... Nitrile
Stem ..... Brass
Automatic Float Drain – ..... Housing, Float Plastic
Seals ..... Nitrile
Springs, Push Rod ..... Stainless Steel

Filter Element –
Borosilicate & felt glass fibers 99.97% DOP efficiency
Largest Aerosol Particle Passed (Grade 6) ..... 0.01 Micron
Largest Solid Particle Passed (Grade 6) ..... 0.30 Micron

Seals ..... Nitrile

Sight Gauge ..... Polyamide

Parker Hannifin Corporation
Pneumatic Division
Richland, Michigan
www.parker.com/pneumatics

12F Coalescing Filters – Standard

Features

- Removes liquid aerosols and sub-micron particles.
- Liquids gravitate to the bottom of the element and will not re-enter the airstream.
- Oil free air for critical applications, such as air gauging and pneumatic instrumentation and controls.
- Interchangeable twist and automatic float drains.
- Differential pressure indicator standard.
- Shown with recommended metal bowl guard.
- High Flow: Grade 6 Element 3/8" – 73 SCFM§, 1/2" – 75 SCFM§, 3/4" – 80 SCFM§; Grade 10 Element 3/8" – 98 SCFM§, 1/2" – 125 SCFM§, 3/4" – 160 SCFM§

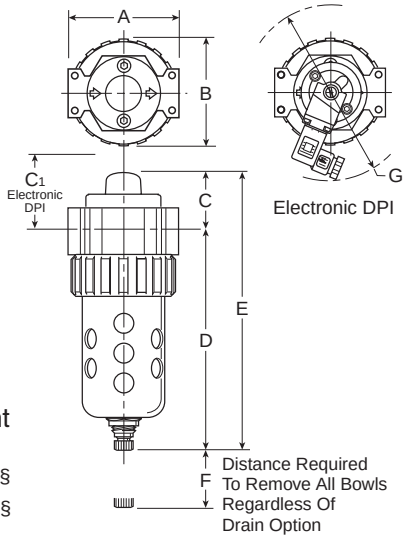

Port Size	NPT	
	Twist Drain	Automatic Float Drain
Poly Bowl ‡ / Metal Guard		
3/8"	**12F22E***	**12F26E***
1/2"	**12F32E***	**12F36E***
3/4"	**12F42E***	**12F46E***
Metal Bowl / Sight Gauge		
3/8"	**12F24E***	**12F28E***
1/2"	**12F34E***	**12F38E***
3/4"	**12F44E***	**12F48E***

Standard part numbers shown bold, with Grade 6 Elements (for Grade 10 Elements, replace "E" with "H" in the 6th position). For other models refer to ordering information below.

‡ For polycarbonate bowl see Caution on page C2.

§ SCFM = Standard cubic feet per minute at 90 psig inlet and 5 psig pressure drop.

12F Coalescing Filter Dimensions		
A 3.24 (82)	**B** 3.25 (83)	**C** 1.63 (41)
C1 2.00 (51)	**D** 6.97 (177)	**D †** 7.00 (178)
E 8.60 (218)	**E †** 8.63 (219)	**F** 2.75 (70)
G Dia. 4.50 (114)		

Inches (mm)

† With Automatic Float Drain

Ordering Information

12F	3	2	E	*	—	—

Port Size
- **2 3/8 Inch**
- **3 1/2 Inch**
- **4 3/4 Inch**

Bowl Options

Polycarbonate Bowl	Metal Bowl
1 Twist Drain	3 Twist Drain
2 Metal Bowl Guard / Twist Drain	**4 Sight Gauge / Twist Drain**
5 Auto Float Drain	7 Auto Float Drain
6 Metal Bowl Guard / Auto Float Drain	**8 Sight Gauge / Auto Float Drain**

Elements
- **E Grade 6**
- H Grade 10

Engineering Level
- * Will be Entered at Factory

Options
- **Blank With Differential Pressure Indicator**
- N Without Differential Pressure Indicator
- R With Electronic DPI

Port Type

Blank	NPT
1*	BSPP
2	BSPT

* 3/8 & 1/2 inch meet ISO 1179-1 Standard.

BOLD ITEMS ARE MOST POPULAR.

Parker Hannifin Corporation
Pneumatic Division
Richland, Michigan
www.parker.com/pneumatics

Technical Information

Grade 6

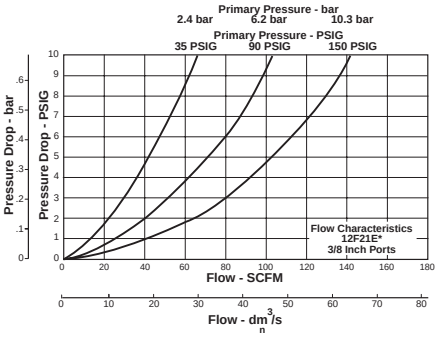

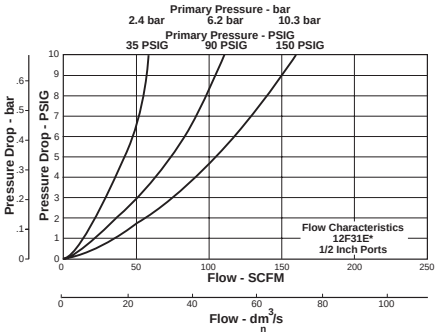

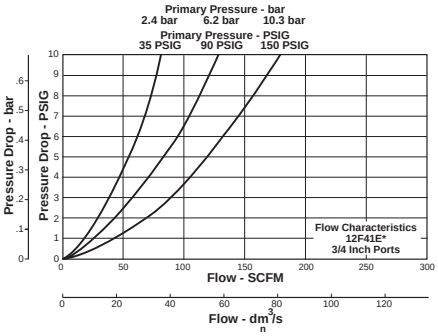

Grade 10

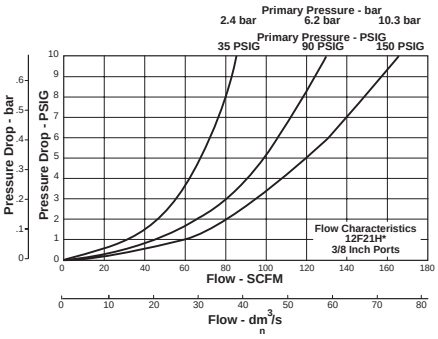

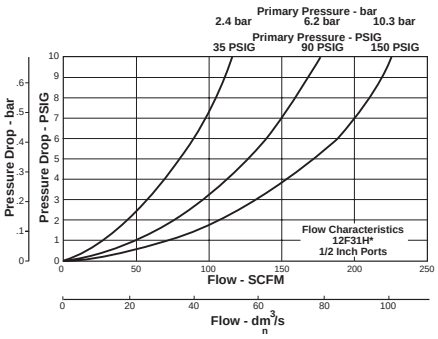

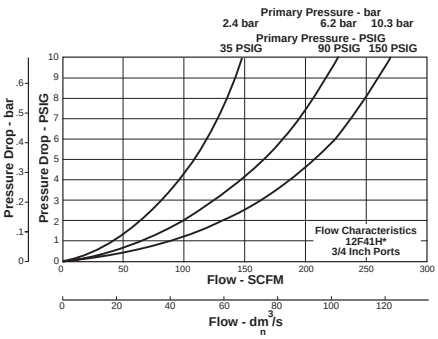

12F Coalescing Filter Kits & Accessories

Bowl Guard Kit PS805P

Bowl Kits –

Poly Bowl – Automatic Float Drain PS822P
Twist Drain PS832P

Metal Bowl – Automatic Float Drain PS826P
Twist Drain PS834P
Sight Gauge / Automatic Float Drain PS823P
Sight Gauge / Twist Drain PS835P

DPI Replacement Kit PS781P

Electronic DPI Replacement Kit PS764

Drain Kits – Automatic Float Drain PS506P
Semi-Auto Drain PS511P
Twist Drain PS512P
Push 'N' Drain PS513P

Electrical Connector - 15mm, 3-Pin DIN, 6 Ft. Cord PS2932JBP

Filter Element Kits – Grade 6 (Standard) PS824P
Grade 10 (Optional) PS830P

Mounting Bracket Kit PS843P

Sight Gauge Kit PS914P

Specifications

Bowl Capacity ..... 7.2 Ounces

Sump Capacity ..... 2.8 Ounces

Operation – Normal Operating Pressure Drop ..... 2 psig
Maximum Recommended Pressure Drop ..... 10 psig
(Element should be replaced)
Minimum Recommended Flow –
20% Nominal Rating of Element

Port Threads ..... 3/8, 1/2 & 3/4 Inch

Pressure & Temperature Ratings –

Without Differential Pressure Indicator:
Polycarbonate Bowl – 0 to 150 psig (0 to 10.3 bar)
32°F to 125°F (0°C to 52°C)
Metal Bowl – 0 to 250 psig (0 to 17.2 bar)
32°F to 175°F (0°C to 80°C)

With Differential Pressure Indicator: 0 to 150 psig (0 to 10.3 bar)
32°F to 125°F (0°C to 52°C)
Automatic Float Drain – 15 to 250 psig (1.0 to 17.2 bar)

Weight ..... 2.4 lb. (1.1 kg)

Materials of Construction

Body ..... Zinc

Bowls ..... Transparent Polycarbonate
Metal (Zinc) With or Without Sight Gauge

Bowl Guard ..... Steel

Collar ..... Plastic or Metal

Drains – Twist Drain – Body & Nut ..... Plastic
Push 'N' Drain – Body ..... Nitrile
Stem ..... Brass
Automatic Float Drain – ..... Housing, Float Plastic
Seals ..... Nitrile
Springs, Push Rod ..... Stainless Steel

Filter Element –
Borosilicate & felt glass fibers 99.97% DOP efficiency
Largest Aerosol Particle Passed (Grade 6) ..... 0.01 Micron
Largest Solid Particle Passed (Grade 6) ..... 0.30 Micron

Seals ..... Nitrile

Sight Gauge ..... Polyamide

Parker Hannifin Corporation
Pneumatic Division
Richland, Michigan
www.parker.com/pneumatics

P3NF Coalescing Filters – Hi-Flow

Features

- Port blocks (PB) available to provide 1-1/2" port extension to 1" ported bodies.
- Metal bowl with sight gauge.
- Large filter element surface guarantees low pressure drop and increased element life.
- Twist Drain as standard, optional automatic float drain.
- High Flow: Grade 6 Element
  3/4" – 130 SCFM§
  1" – 140 SCFM§
  1-1/2"† – 150 SCFM§
  Grade 10 Element
  3/4" – 195 SCFM§
  1" – 215 SCFM§
  1-1/2"† – 225 SCFM§

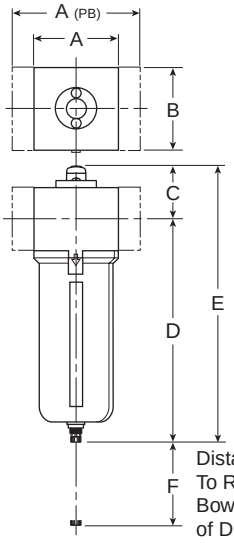

Port Size	NPT	
	Twist Drain	Automatic Float Drain
Metal Bowl / Sight Gauge		
3/4"	**P3NFA96DSM**	**P3NFA96DSA**
1"	**P3NFA98DSM**	**P3NFA98DSA**
1-1/2"†	**P3NFA9PDSM**	**P3NFA9PDSA**

Standard part numbers shown bold for Grade 6 Elements (for Grade 10 Elements, replace "D" with "Q" in the 8th position). For other models refer to ordering information below.

† 1" Port Body with 1-1/2" Port Block.

§ SCFM = Standard cubic feet per minute at 90 psig inlet and 5 psig pressure drop.

P3NF Coalescing Filter Dimensions		
A 3.62 (92)	**A (PB)** 5.91 (150)	**B** 3.62 (92)
C 2.30 (58.5)	**D †** 9.57 (243)	**E †** 11.90 (302)
F 4.92 (125)		

Inches (mm)

† With Twist Drain or Automatic Float Drain

Ordering Information

P3N	F	A	9	8	D	S	M

Design Level

Port Type
- 1* G Thread (BSPP) Female
- 2 Rc Thread (BSPT) Female
- **9 NPT Female**

* 3/4 & 1 inch meet ISO 1179-1 Standard.

Port Size
- **6 3/4" (w/o Port Blocks)**
- **8 1" (w/o Port Blocks)**
- **P 1-1/2" Port Blocks (w/ 1" Ported Body)**

Element
- w/ DPI Indicator
- **D Grade 6**
- Q Grade 10

Bowl
- **S Metal Bowl w/ Sight Gauge**

Drain
- **M Twist Drain**
- A Automatic Float Drain

BOLD ITEMS ARE MOST POPULAR.

Parker Hannifin Corporation
Pneumatic Division
Richland, Michigan
www.parker.com/pneumatics

Technical Information

Grade 6

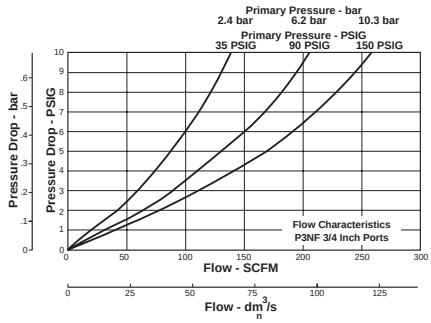

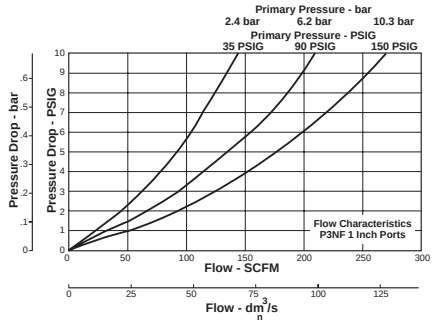

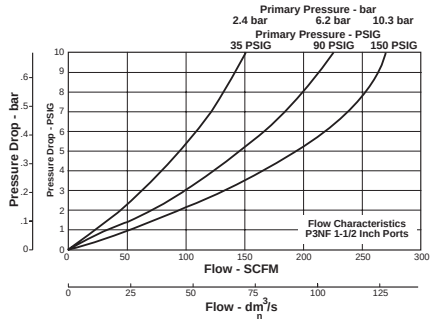

Grade 10

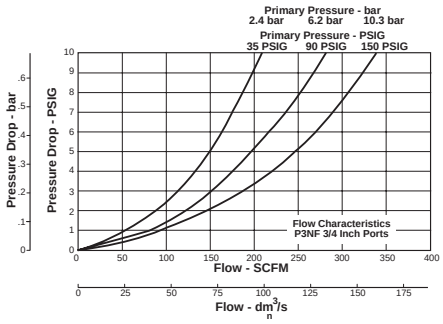

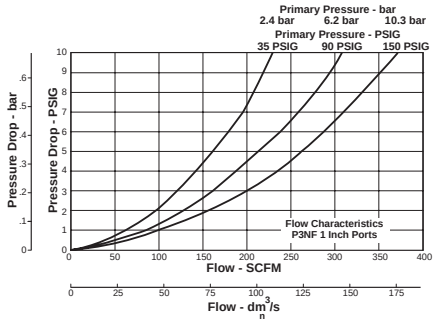

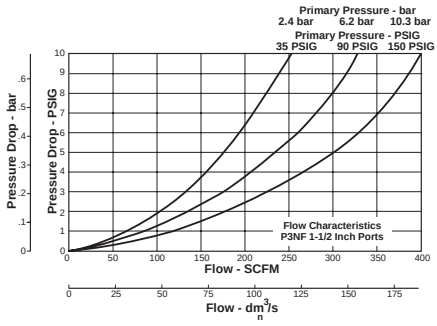

P3NF Coalescing Filter Kits & Accessories

Bowl Kits –
Metal Bowl –
Sight Gauge / Automatic Float Drain P3NKA00BSA
Sight Gauge / Twist Drain P3NKA00BSM
Sight Gauge / Push 'N' Drain P3NKA00BSP

Bowl Latch Kit C11A33

DPI Replacement Kit PS781P

Drain Kit –
Automatic Float Drain PS506P
Semi-Auto Drain PS511P
Twist Drain PS512P
Push 'N' Drain PS513P

Filter Elements – Grade 6 (Standard) P3NKA00ESCB
Grade 10 (Optional) P3NKA00ES9

Sight Gauge Kit P3NKA00PE

Mounting Bracket Kit* P3NKA00MW

* If 1-1/2 BSPP E02 fittings are required, use P3NKA0BMW.

Specifications

Bowl Capacity ..... 18.0 Ounces

Sump Capacity ..... 6.8 Ounces

Filter Element –
Borosilicate & felt glass fibers 99.97% DOP efficiency
Largest Aerosol Particle Passed (Grade 6) ..... 0.01 Micron
Largest Solid Particle Passed (Grade 6) ..... 0.30 Micron

Pressure & Temperature Rating – ..... 0 to 250 psig (0 to 17.2 bar)
32°F to 175°F (0°C to 80°C)
Automatic Float Drain – 15 to 250 psig (1.0 to 17.2 bar)

Materials of Construction

Body & Bowl ..... Aluminum

Deflector ..... Plastic

Drain ..... Plastic

Seals ..... Nitrile

Sight Gauge ..... Polyamide (Nylon)

Weight – 3/4" ..... 3.5 lb. (1.6 kg)
1" ..... 3.5 lb. (1.6 kg)
1-1/2" † ..... 4.6 lb. (2.1 kg)

† 1" Port Body with 1-1/2" Port Block.

Parker Hannifin Corporation
Pneumatic Division
Richland, Michigan
www.parker.com/pneumatics

F701 Coalescing Filters

Features

- Removes liquid aerosols and sub-micron particles.
- Protects pneumatic systems from contamination that standard particulate filters will not catch.
- Two different grade elements available.
- Differential pressure indicator (pop-up) standard.
- Differential pressure gauge optional.
- High flow design.

Note: All coalescing filters should be protected by a particulate filter (i.e., F602, or other) installed upstream.

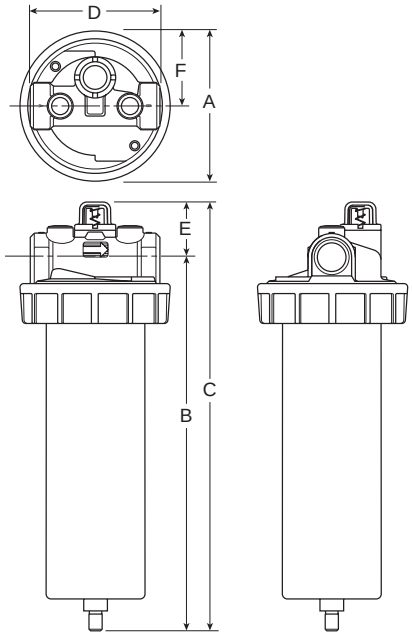

Port Size	Grade 6 Flow (SCFM)*	Grade 6 Part Number	Grade 10 Flow (SCFM)*	Grade 10 Part Number
Metal Bowl 32 oz.				
3/4"	95	**F701-06E3P**	158	**F701-06E7P**
1"	95	**F701-08E3P**	158	**F701-08E7P**
Metal Bowl 100 oz.				
3/4"	170	**F701-06L3P**	285	**F701-06L7P**
1"	170	**F701-08L3P**	285	**F701-08L7P**

* Dry media flow. For wet media info see table on next page.

F701 Coalescing Filter Dimensions						
Port Size	Bowl Capacity	A	B	C	D	E
3/4 & 1 Inch (E)	32 oz.	4.95 (126)	11.77 (299)	13 (330)	4.00 (101)	1.23 (31)
3/4 & 1 Inch (L)	100 oz.	4.95 (126)	21.39 (543)	22.63 (575)	4.00 (101)	1.23 (31)

"G" Differential Pressure Gauge add 2.00 (50.8) to C & E.
"Q" External Auto Drain add 1.70 (43.1) to B & C.

inches (mm)

Ordering Information

F	701	—	06	E	3	P	—	/**

Port Threads
- **— NPT**
- G BSPP

Port Size
- **06 3/4 Inch**
- **08 1 Inch**

Bowl
- **E Metal without Sight Gauge 32 oz.**
- **L Metal without Sight Gauge 100 oz.**

Element
- **3 Grade 6**
- **7 Grade 10**

Element Service Indicator
- Blank None
- **P Pop-up Style**
- G Differential Pressure Gauge

Bowl Drains
- **Blank Manual Twist Drain**
- T High Pressure Internal Auto Drain
- Q* External Auto Drain
- R Low Pressure Internal Auto Drain

Engineering Level
- * Will be Entered at Factory

*"Q" Option Not Available with Bowl Option "L".

BOLD ITEMS ARE MOST POPULAR.

Parker Hannifin Corporation
Pneumatic Division
Richland, Michigan
www.parker.com/pneumatics

Technical Information

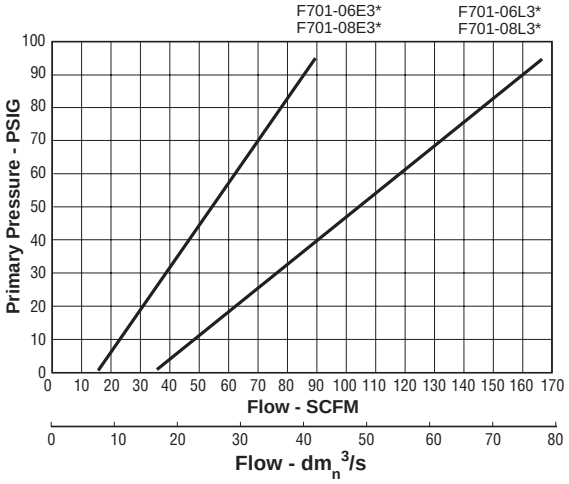

Media Specifications

Grade	D.O.P. Coalescing Efficiency 0.3 to 0.6 Micron Particles	Maximum Oil Carryover[1] PPM w/w	Pressure Drop (PSID)[2] @ Rated Flow	
			Media Dry	Media Wet With 10-20 wt. oil
6	99.97%	0.008	1.0	2-3
10	95%	0.85	0.5	0.5

[1] Tested per BCAS 860900 at 40 ppm inlet.
[2] Add dry + wet for total pressure drop.
D.O.P. = Dioctylphthalate

F701 Filter Kits & Accessories

Mounting Bracket –
Port Size
3/4 (Pair of Pipe Mounted Brackets)..... SA200AW57
1 (Pair of Pipe Mounted Brackets)..... SA200CW57

Bowl Kit –
Port Size
3/4, 1 Inch (E) 32 oz BK603B
3/4, 1 Inch (L) 100 oz..... BK603C

Differential Pressure Pop Up Indicator Repair Kit RK701P
(only works with originally equipped units)

Differential Pressure Gauge DP276-P
(only works on units without pop-up indicator)

Drain Kits –
Internal Automatic Drain - High Pressure (T) SA702MD
Manual Twist Drain SA600Y7-1

Filter Element Kits –
Port Size / Grade 6
3/4, 1 Inch (E) 32 oz. F701-C3-0773
3/4, 1 Inch (L) 100 oz.....F701-C3-0774

Port Size / Grade 10
3/4, 1 Inch (E) 32 oz. F701-C7-0773
3/4, 1 Inch (L) 100 oz.....F701-C7-0774

Specifications

Operation –
Maximum Recommended Pressure Drop .....10 psig
(element should be replaced)
Normal Operating Pressure Drop (Dry).....2 psig
Normal Operating Pressure Drop (Wet) .....5 psig

( ) = Bowl Type

Minimum Recommended Flow – ..... 20% of Rated Flow

Maximum Pressure (Manual Drains) – .....0 to 300 psig (0-20 bar)

Maximum Pressure (Auto Drains) –
"R" Drain (Low Pressure Internal)..... 175 psig (12 bar)
"T" Drain (High Pressure Internal) ..... 250 psig (17 bar)
"Q" Drain (External) ..... 250 psig (17 bar)

Maximum Temperature .....32°F to 150°F (0°C to 65°C)
Maximum temperature with "T", "R", or "Q" Drains ..... 125°F (52°C)

Weight –
3/4 & 1 Inch (E) 32 oz.....5 lb. (2.3 kg)
3/4 & 1 Inch (L) 100 oz. .....8 lb. (3.6 kg)

Materials of Construction

Body & Flange Ring .....Zinc

Bowl –
Metal Bowl (E) (L)..... Aluminum

Drains –
Auto Float Drain –
Housing "R", "T" (Internal)..... Acetal
Housing "Q" (External)..... Bronze
Manual Twist Drain ..... Brass

Seals & Float ..... Buna N

Springs .....Stainless Steel

Elements (Media) ..... Borosilicate Fibers & Felt

Element End Caps .....Urethane

Seals ..... Buna N

Parker Hannifin Corporation
Pneumatic Division
Richland, Michigan
www.parker.com/pneumatics

30F, 31F, 32F Coalescing Filters – Main Line

Features

- Removes liquid aerosols and sub-micron particles.
- Liquids gravitate to the bottom of the element and will not re-enter the airstream.
- Oil free air for critical applications, such as air gauging and pneumatic instrumentation and controls.
- Differential pressure indicator standard.
- High Flow:

Port Size	Model	Sump Capacity	Grade 6 SCFM§	Grade 10 SCFM§
1-1/2"	30F	14.8 Oz.	350	600
2"	31F83	17.9 Oz.	450	750
2"	31F8L	20.9 Oz.	625	1035
2-1/2"	32F9	29.7 Oz.	800	1330
3"	32FN	29.7 Oz.	1000	1660

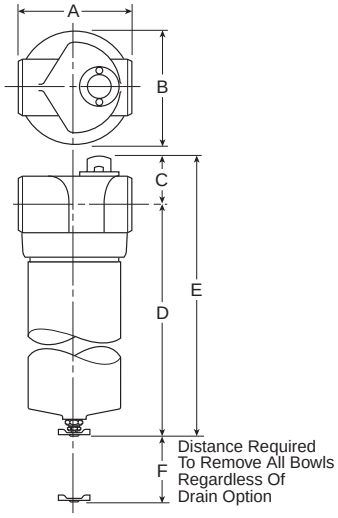

Port Size	Twist Drain
Metal Bowl without Sight Gauge	
1-1/2"	**30F73E*P**
2"	**31F83E*P**
2"	**31F8LE*P**
2-1/2"	**32F9LE*P**
3"	**32FNLE*P**

Standard part numbers shown bold, with Grade 6 Elements (for Grade 10 Elements, replace "E" with "H" in the 6th position). For other models refer to ordering information below.

§ SCFM = Standard cubic feet per minute at 90 psig inlet and 5 psig pressure drop.

Main Line – Coalescing Filter Dimensions

	A	B	C	D	E	F
30F73	6.00 (152)	5.67 (144)	2.55 (65)	17.97 (456)	20.52 (521)	13.50 (343)
30F77	6.00 (152)	5.67 (144)	2.55 (65)	17.76 (451)	20.32 (516)	13.50 (343)
31F83	6.00 (152)	5.67 (144)	2.55 (65)	23.60 (599)	26.15 (664)	19.25 (489)
31F8L	6.00 (152)	5.67 (144)	2.55 (65)	28.60 (726)	31.15 (791)	24.02 (610)
31F87	6.00 (152)	5.67 (144)	2.55 (65)	23.40 (594)	25.95 (659)	19.25 (489)
31F8M	6.00 (152)	5.67 (144)	2.55 (65)	28.39 (721)	30.06 (763)	24.02 (610)
32F9L	8.00 (203)	7.60 (193)	3.31 (84)	34.64 (880)	37.94 (964)	28.50 (724)
32F9M	8.00 (203)	7.60 (193)	3.31 (84)	34.40 (875)	37.74 (959)	28.50 (724)
32FNL	8.00 (203)	7.60 (193)	3.31 (84)	34.64 (880)	37.94 (964)	28.50 (724)
32FNM	8.00 (203)	7.60 (193)	3.31 (84)	34.40 (875)	37.74 (959)	28.50 (724)

Inches (mm)

Ordering Information

30F	7	3	E	*	P

Port Size
- 30F
- **7 1-1/2 Inch**
- 31F
- **8 2 Inch**
- 32F
- **9 2-1/2 Inch**
- **N 3 Inch**

Bowl Options
- Twist Drain
- **3 Short Bowl (30F, 31F)**
- **L Long Bowl (31F, 32F)**
- Metal Bowl with Automatic Float Drain
- **7 Short Bowl (30F, 31F)**
- **M Long Bowl (31F, 32F)**

Element
- **E Grade 6**
- **H Grade 10**

Engineering Level
- * Will be Entered at Factory

Options
- **P Pressure Differential Indicator**

BOLD ITEMS ARE MOST POPULAR.

Parker Hannifin Corporation
Pneumatic Division
Richland, Michigan
www.parker.com/pneumatics

Technical Information

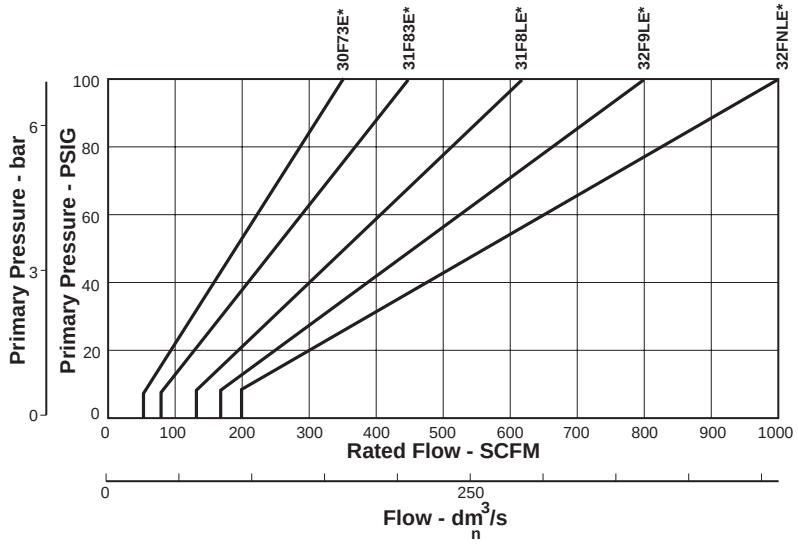

30F, 31F, 32F Coalescing Filter Kits & Accessories

Bowl Kit – Metal / Twist Drain –
- 30F 41618P
- 31F83 ..... 41619P

DPI Replacement Kit –
- 30F, 31F83, 31F8L, 32F 2003P

Differential Pressure Indicating Gauge –
- 30F, 31F83, 31F8L, 32F 2111P

Drain Kits – Automatic Float Drain –
- 30F, 31F83, 31F8L, 32F PS506P

Filter Element Kits –
- Grade 6 (Standard) –
  - 30F 9920-011X1P
  - 31F83 ..... 9920-012X1P
  - 31F8L 9920-013X1P
  - 32F 9920-014X1P
- Grade 10 (Optional) –
  - 30F 9920-015X1P
  - 31F83 ..... 9920-016X1P
  - 31F8L 9920-017X1P
  - 32F 9920-018X1P

Specifications

Model	Sump Capacity	Port Threads	Weight	
30F	14.8 Oz.	1-1/2"	11.9 lb.	(5.4 kg)
31F83	17.9 Oz.	2"	14.0 lb.	(6.4 kg)
31F8L	20.9 Oz.	2"	15.9 lb.	(7.2 kg)
32F9	29.7 Oz.	2-1/2"	35.0 lb.	(15.9 kg)
32FN	29.7 Oz.	3"	34.2 lb.	(15.5 kg)

Operation –
- Normal Operating Pressure Drop ..... 2 psig
- Maximum Recommended Pressure Drop ..... 10 psig (Element should be replaced)
- Minimum Recommended Flow 20%

Pressure & Temperature Ratings – ..... 0 to 250 psig (0 to 17.2 bar)
32°F to 175°F (0°C to 80°C)

Automatic Float Drain – 15 to 250 psig (1.0 to 17.2 bar)

Materials of Construction

Body ..... Aluminum

Bowl ..... Aluminum without Sight Gauge

Drains –
- Twist Drain ..... Brass Petcock
- Automatic Float Drain –
  - Housing, Float ..... Plastic
  - Seals ..... Buna N
  - Springs, Push Rod ..... Stainless Steel

Filter Element –
- Borosilicate & felt glass fibers 99.97% DOP efficiency
- Largest Aerosol Particle Passed (Grade 6) ..... 0.01 Micron
- Largest Solid Particle Passed (Grade 6) ..... 0.30 Micron

Seals ..... Nitrile

Parker Hannifin Corporation
Pneumatic Division
Richland, Michigan
www.parker.com/pneumatics

Bulk Liquid Separators – P3TF

P3TFA98WEAN

Features

- Tested in Accordance with ISO 8573.9.
- High Liquid Removal Efficiencies at All Flow Conditions.
- Low Pressure Losses for Low Operational Costs.
- Multiple Port Sizes for a Given Flow Rate Provides Increased Flexibility During Installation.
- Suitable for Variable Flow Compressors.
- Works with All Types of Compressor and Compressor Condensate.
- Low Maintenance.
- Lightweight Cast Aluminum Housing with 1/4" to 3" Ports.
- External Surface Epoxy Painted for Maximum Corrosion Resistance.

Applications

- Bulk Liquid Removal at Any Point in a Compressed Air System
- Protection of Refrigeration and Heatless Regenerative Desiccant Dryers
- Liquid Removal from Compressor Inter-coolers / After-coolers
- Liquid Separation Within Refrigeration Dryers
- Pre-Filtration

Ordering Information

P3TF	A	9	2WA	A	N

Engineering Level

A Current Engineering Level

Thread Type

2 BSPT
9 NPT

Port Size / Flow

2WA	**1/4 Inch / 21 SCFM**
3WB	**3/8 Inch / 85 SCFM**
4WC	**1/2 Inch / 85 SCFM**
6WD	**3/4 Inch / 233 SCFM**
8WE	**1 Inch / 233 SCFM**
BWG	1-1/2 Inch / 742 SCFM
CWH	2 Inch / 742 SCFM
EWK	3 Inch / 1695 SCFM

Drain Type

A Auto Internal Float*

* Models are supplied with Auto Drain as Standard.

BOLD ITEMS ARE MOST POPULAR.

Parker Hannifin Corporation
Pneumatic Division
Richland, Michigan
www.parker.com/pneumatics

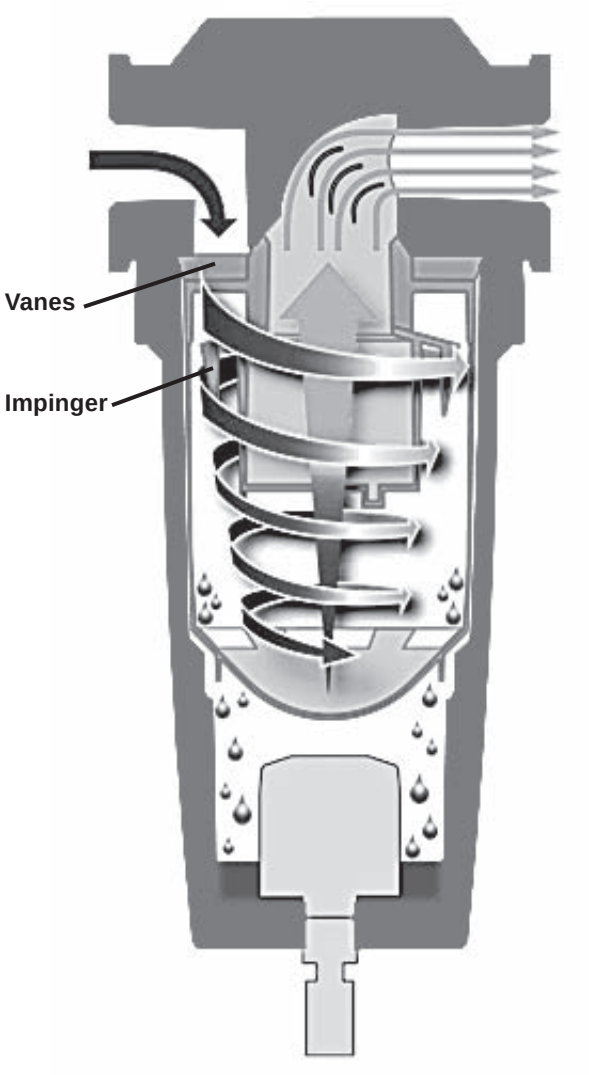

Operation

- Air Enters the Bulk Liquid Separator Inlet and Turns Into the Separator Module.
- The Inlet of the Separator Module Contains a Set of Fixed Vanes Which the Air Must Pass Through.
- The Vanes Force the Air to Spin Inside the Vessel.
- The Spinning Air is Then Forced to Change Direction as it Passes the Impinger.
- A Vortex is Created Which, Due to the Design of the Separator Module, Narrows and Intensifies as it Reaches the Lower Part of the Separator Module.
- Bulk Liquid is Removed From the Airstream Due to:
  – Directional Changes of the Airstream
  – Velocity Changes
  – Centrifugal Action of the Vortex
- As the Vortex Reaches the Bottom of the Module, Air is Forced Through The Center of the Vortex.
- Aerospace Turning Vanes, Located in the Outlet of the Separator Module, Turn an Inefficient Corner Into a Number of More Efficient Corners.
- Turning Vanes Reduce Turbulence, Minimizing Pressure Loss and Cost of Ownership.
- The Number of Vanes Required is Dependent Upon the Conduit Diameter.

Parker Hannifin Corporation
Pneumatic Division
Richland, Michigan
www.parker.com/pneumatics

Bulk Liquid Separators – P3TF

Specifications

Pressure Differential at Rated Flow..... 1.0 PSID (0.07 bar)

Model Number	Pipe Size	SCFM (L/s)	Maximum Operating Pressure psig (bar)	Operating Temperature	Weight Lb. (kg)
P3TFA92WAAN	1/4"	21 (10)	232 (16)	Maximum 176°F (80°C) Minimum 35°F (1.5°C)	0.9 (0.4)
P3TFA93WBAN	3/8"	85 (40)			2.2 (1.0)
P3TFA94WCAN	1/2"	85 (40)			2.2 (1.0)
P3TFA96WDAN	3/4"	233 (110)			4.8 (2.2)
P3TFA98WEAN	1	233 (110)			2.6 (5.7)
P3TFA9BWGAN	1-1/2"	742 (350)			5.3 (11.6)
P3TFA9CWHAN	2"	742 (350)			5.3 (11.6)
P3TFA9EWKAN	3"	1695 (800)			12.0 (26.4)

Stated flows are for operation at 102 psig (7 bar) with reference to 20°C, 1 bar (a), 0% relative water vapor pressure.

Flow

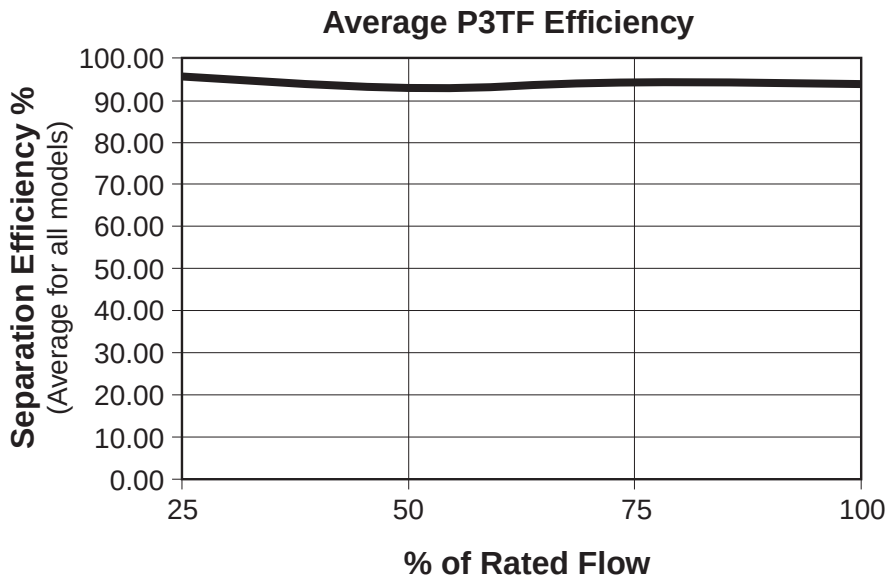

Parker Hannifin Corporation
Pneumatic Division
Richland, Michigan
www.parker.com/pneumatics

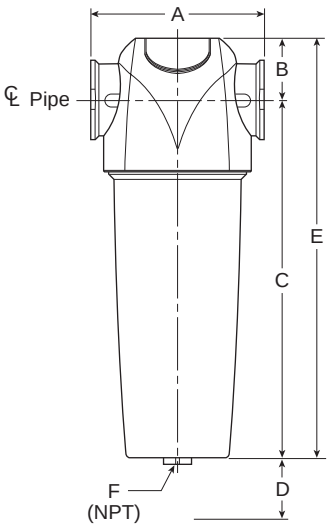

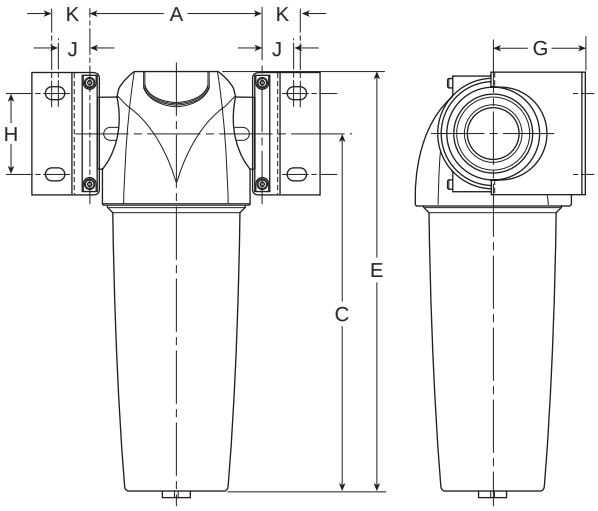

Dimensions

Model Number	Wall Mounting Bracket Kit	Pipe Size	A	B	C	D	E	NPT F	G	H	J	K
P3TFA92WAAN	**P3TKA00MWA**	1/4"	3.00 (76)	1.12 (28.5)	6.02 (153)	1.58 (40)	7.15 (181.5)	1/2	2.05 (50)	1.18 (30)	0.71 (18)	0.96 (24.5)
P3TFA93WBAN	**P3TKA00MWB**	3/8"	3.83 (97.5)	1.34 (34)	7.91 (201)	1.97 (50)	9.25 (235)	1/2	2.36 (60)	1.57 (40)	0.81 (20.5)	1.00 (25.5)
P3TFA94WCAN	**P3TKA00MWB**	1/2"	3.83 (97.5)	1.34 (34)	7.91 (201)	1.97 (50)	9.25 (235)	1/2	2.36 (60)	1.57 (40)	0.81 (20.5)	1.00 (25.5)
P3TFA96WDAN	**P3TKA00MWD**	3/4"	5.07 (129)	1.67 (42.5)	13.09 (232.5)	2.76 (70)	10.80 (275)	1/2	2.68 (68)	2.36 (60)	0.91 (23)	1.10 (28)
P3TFA98WEAN	**P3TKA00MWD**	1	5.07 (129)	1.67 (42.5)	12.68 (322)	2.76 (70)	14.35 (364.5)	1/2	2.68 (68)	2.36 (60)	0.91 (23)	1.10 (28)
P3TFA9BWGAN	**P3TKA00MWF**	1-1/2"	6.70 (170)	1.97 (50)	18.68 (474.5)	3.94 (100)	20.64 (524.5)	1/2	3.62 (92)	3.31 (84)	1.26 (32)	1.54 (39)
P3TFA9CWHAN	**P3TKA00MWF**	2"	6.70 (170)	1.97 (50)	18.68 (474.5)	3.94 (100)	20.64 (524.5)	1/2	3.62 (92)	3.31 (84)	1.26 (32)	1.54 (39)
P3TFA9EWKAN	**P3TKA00MWJ**	3"	8.07 (205)	2.36 (60)	30.39 (772)	4.72 (120)	32.76 (832)	1/2	5.31 (135)	3.94 (100)	1.40 (35.5)	1.67 (42.5)

Inches (mm)

Bulk Liquid Separator Kits & Accessories

Drain Kit PSY10328

Materials of Construction

Automatic Float Drain ..... Plastic
Housing / Bowl ..... Aluminum
Seals ..... Fluorocarbon

For External Drains, please reference WDV3-G Automatic Electrical Drain or WDV2 Zero Loss Drain

Wall Mounting Bracket Kit

Mounting brackets provide additional support to filters installed in flexible piping systems or OEM equipment.

Parker Hannifin Corporation
Pneumatic Division
Richland, Michigan
www.parker.com/pneumatics

Regulators

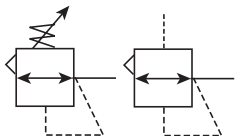

- Pipe Sizes 1/8 thru 2 Inch
- Flows to 1000 SCFM
- Pressures to 250 psig

Air regulators are designed to provide quick response and accurate pressure regulation for the most demanding industrial applications.

- Miniature 02R Series, 1/4 Inch
- Miniature 14R Series, 1/8 and 1/4 Inch
- Miniature P3A-R Series, 1/8 and 1/4 Inch
- Miniature R34 Series, 1/8 and 1/4 Inch
- Miniature R24 / R25 Series, 1/4 and 3/8 Inch
- Miniature R45 / R46 Series, 1/4 and 3/8 Inch
- Economy 15R Series, 1/4 and 3/8 Inch
- Economy 05R Series, 1/4 and 3/8 Inch
- Compact 06R Series, 1/4, 3/8 and 1/2 Inch
- Standard 07R Series, 3/8, 1/2 and 3/4 Inch
- Hi-Flow P3NR Series, 3/4, 1 and 1-1/2 Inch
- Hi-Flow R119 Series, 3/4 thru 2 Inch
- Hi-Flow 09R Series, 2 Inch
- Pilot Operated 10R, 11R, 12R, P3NR Series, 1/4 thru 1-1/2 Inch; R119 Series 3/4 thru 2-1/2 Inch

Miniature Regulators for Water Service

- Miniature R24 & R25 Series, 1/4 and 3/8 Inch
- Miniature R45 & R46 Series, 1/4 and 3/8 Inch
- Miniature 20R Series, 1/8 and 1/4 Inch

Regulator Selection

1. Determine maximum system flow requirements.
2. Determine maximum allowable pressure drop at rated flow in SCFM.
3. Refer to flow chart and select regulator by choosing the curve that offers minimum pressure drop at desired flow in SCFM.

Reading Flow Charts to Size Regulators

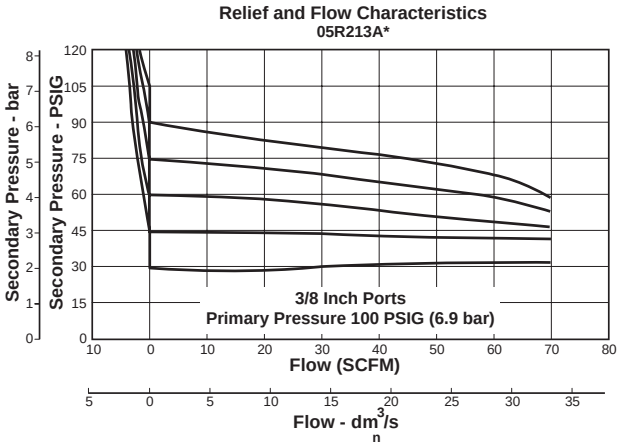

Once the required flow is determined for a pneumatic application the regulator or filter/regulator can be selected by using the flow chart. The chart serves two different purposes. To read the flow, use the right side of the chart. To read the relief characteristics use the left side of the chart. When reading the flow chart, first determine the secondary pressure that will be used. Find the appropriate pressure curve on the graph. Given an acceptable pressure drop for an application, follow the flow curve until it intersects the pressure drop point. This will give the flow at that particular pressure drop.

⚠ WARNING

Product rupture can cause serious injury.
Do not connect regulator to bottled gas.
Do not exceed maximum primary pressure rating.

CAUTION:

REGULATOR PRESSURE ADJUSTMENT – The working range of knob adjustment is designed to permit outlet pressures within their full range. Pressure adjustment beyond this range is also possible because the knob is not a limiting device. This is a common characteristic of most industrial regulators, and limiting devices may be obtained only by special design.

For best performance, regulated pressure should always be set by increasing the pressure up to the desired setting.

Parker Hannifin Corporation
Pneumatic Division
Richland, Michigan
www.parker.com/pneumatics

General Purpose Regulators

Used to provide a convenient and low cost method to reduce a supplied air pressure to a desired outlet pressure and transform a fluctuating air supply to a relatively constant reduced air pressure within the operating range of the regulator.

This type of regulator is generally used in a widevariety of applications where reduced pressure is highly desirable for energy conservation, safety requirements, air circuit control and air instrumentation.

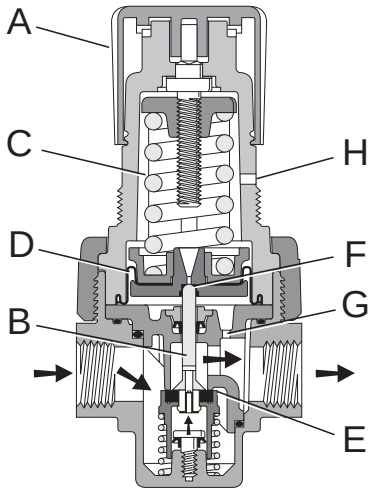

Operation

With the adjusting knob (**A**) turned fully counterclockwise (no spring load), and pressure supplied to the regulator inlet port, the valve poppet assembly (**B**) is closed. Turning the adjusting knob clockwise applies a load to control spring (**C**). This load causes the piston /diaphragm (**D**) and the valve poppet assembly (**B**) to move downward allowing flow across the seat area (**E**) created between the poppet assembly and the seat. Pressure in the downstream line is sensed below the piston / diaphragm (**D**) and offsets the load of spring (**C**). As downstream pressure rises, poppet assembly (**B**) and control piston (**C**) move upward until the area (**E**) is closed and the load of the spring (**C**) and pressure under piston / diaphragm (**D**) are in balance. A reduced outlet pressure has now been obtained, depending on spring load. Creating a demand downstream, such as opening a valve, results in a reduced pressure under the piston / diaphragm (**D**). The load of control spring (**C**) now causes the poppet assembly to move downward opening seat area (**E**) allowing air to flow to meet the downstream demand. The flow of downstream air is metered by the amount of opening (**E**).

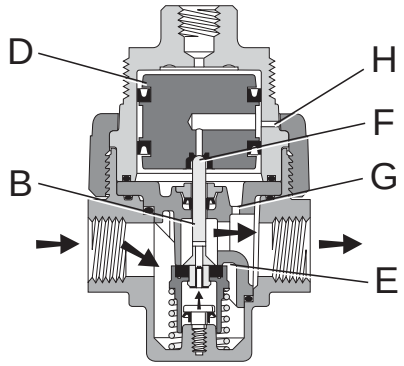

During low flow requirements, the amount of opening at the seat (**E**) is small, while at high flows it is large. The downstream pressure signal, which regulates the amount of opening, requires an adjustment over this range, in order to attempt a constant output. This adjustment is the orifice (**G**), which is sized and located in such a manner as to provide a compensation to the downstream pressure signal transmitted to the piston. This effect is called aspiration and its effect is to maintain downstream pressure nearly constant over a wide range of flow demands.

Should downstream pressure exceed the desired regulated pressure, the excess pressure will cause the piston / diaphragm (**D**) to move upward against control spring (**C**), open vent hole (**F**), and vent the excess pressure to atmosphere through the hole in the bonnet (**H**). (This occurs in the relieving type regulator only.)

Parker Hannifin Corporation
Pneumatic Division
Richland, Michigan
www.parker.com/pneumatics

Notes

Parker Hannifin Corporation
Pneumatic Division
Richland, Michigan
www.parker.com/pneumatics

02R Regulator

Features

- Compact, space saving design.
- High flow.
- Light weight.
- Relieving piston design provides excellent pressure regulation and allows reduction of downstream pressure when system is deadheaded.

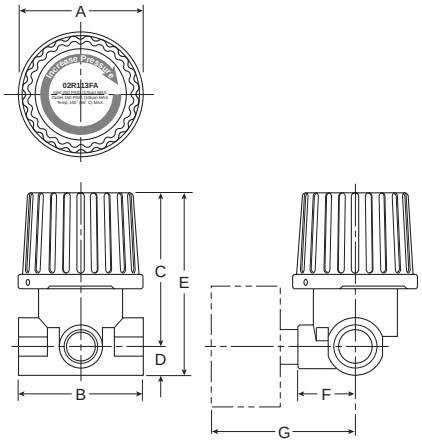

Port Size	Standard Pressure 0 to 125 PSIG (0 to 8.6 bar)
1/4"	**02R113FA**
	BP02R113FA*

* Consists of (50) pieces.

02R Regulator Dimensions						
A	B	C	D	E	F	G
1.65 (42)	1.63 (41)	1.97 (50)	0.33 (8)	2.30 (58)	0.75 (19)	1.88 (48)

Inches (mm)

CAUTION:

REGULATOR PRESSURE ADJUSTMENT – The working range of knob adjustment is designed to permit outlet pressures within their full range. Pressure adjustment beyond this range is also possible because the knob is not a limiting device. This is a common characteristic of most industrial regulators, and limiting devices may be obtained only by special design.

For best performance, regulated pressure should always be set by increasing the pressure up to the desired setting.

⚠ WARNING

Product rupture can cause serious injury.
Do not connect regulator to bottled gas.
Do not exceed maximum primary pressure rating.

Technical Information

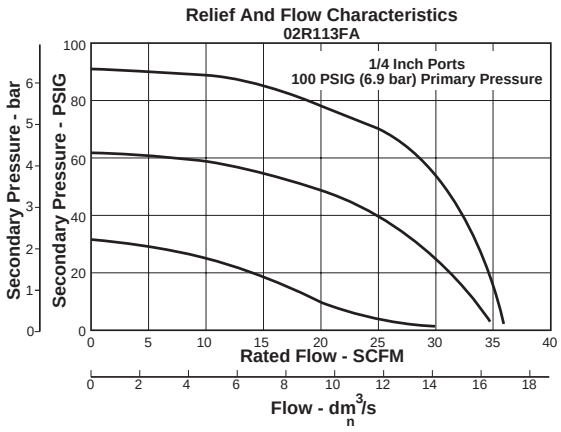

Specifications

Gauge Ports (1) ..... 1/8 Inch
Port Threads ..... 1/4" NPT
Pressure Rating ..... 0 to 250 psig (0 to 17,2 bar)
Temperature Rating ..... 32°F to 125°F (0°C to 52°C)
Secondary Pressure Range ..... 0.3 to 125 psig (0 to 8,6 bar)
Weight ..... 0.3 lb. (150 g)

Adjusting Knob / Bonnet ..... Filled Polyamide
Body ..... Zinc
Bonnet, Seat, Piston ..... Acetal
Seals ..... Nitrile Rubber

Accessory

Gauge: 0 to 160 psig, 1/8" NPT (0 to 11.0 bar) K4515N18160

Parker Hannifin Corporation
Pneumatic Division
Richland, Michigan
www.parker.com/pneumatics

14R Regulators – Miniature

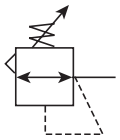

Features

- Unbalanced poppet standard.
- Solid control piston with lip seal for extended life.
- Non-rising adjusting knob.
- Compact, 2.88 inch (73,2mm) high by 1.65 inch (42mm) wide.
- Easily serviced.
- High Flow: 1/8" – 13 SCFM§
  1/4" – 15 SCFM§

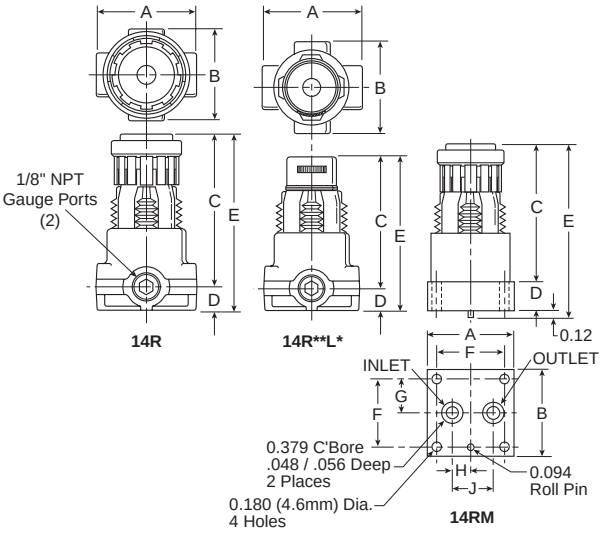

Port Size	NPT
Without Gauge	
1/8"	**14R013F***
1/4"	**14R113F***
With Gauge	
1/8"	**14R018F***
1/4"	**14R118F***

Standard part numbers shown bold. For other models refer to ordering information below.

NOTE: 1.218 Dia. (31mm) hole required for panel mounting.

§ SCFM = Standard cubic feet per minute at 100 psig inlet, 90 psig no flow secondary setting and 10 psig pressure drop.

14R Regulator Dimensions					
14R	**A** 1.65 (42)	**B** 1.56 (40)	**C** 2.50 (63.5)	**D** 0.38 (10)	**E** 2.88 (73)
14RL***	**A** 1.65 (42)	**B** 1.56 (40)	**C** 2.28 (57.9)	**D** 0.38 (10)	**E** 2.68 (68)
14RM	**A** 1.50 (38)	**B** 1.50 (38)	**C** 2.36 (60)	**D** 0.50 (13)	**E** 2.98 (73)
	F 1.188 (30)	**G** 0.594 (15)	**H** 0.325 (8)	**J** 0.725 (18)	

Inches (mm)

Ordering Information

14R	1	13	F	*	—	—	---

Port Size

- **0 1/8 Inch Pipe, 1/8 Inch Gauge Port**
- **1 1/4 Inch Pipe, 1/8 Inch Gauge Port**
- B 1/4 Inch Pipe, 1/4 Inch Gauge Port
- C 1/8 Inch Pipe, No Gauge Port
- M Manifold Mounting

Pressure Range

Without Gauge			
Yellow Knob		Black Knob	
10	30 psig	B0	30 psig
11	60 psig	B1	60 psig
12	15 psig	B2	15 psig
13	**125 psig**	B3	125 psig
With Gauge*			
15	30 psig	B5	30 psig
16	60 psig	B6	60 psig
17	15 psig	B7	15 psig
18	**125 psig**	B8	125 psig

* Not available with BSPP or BSPT port types.

Relief

- **F Relieving**
- G Non-Relieving
- H Low Temp. Relieving
- J Low Temp. Non-Relieving

Engineering Level

- * Will be Entered at Factory

Port Type

Blank	NPT
1	BSPP
2	BSPT

Options

Blank	No Options
L†	Preset Non-Adjustable
P†	Preset Adjustable
S†	Pressure Limiter Max. Adjustable
T†	Pressure Limiter Max. Non-Adjustable

† Inlet Pressure is 100 psig. For other pressures, contact factory.

Preset / Pressure Limited

Blank	None
XXX*	Preset Pressure
XXX*	Pressure Limited

* Available Preset / Pressure Limited Range, 10 to 90 psig in 5 psig increments. For higher pressures, contact factory.

(Example: 065 = 65 psig)

Spring Type by Preset / Limited Pressure:
For Preset / Limited Pressure 10 to 25 use 30 PSI Spring
For Preset / Limited Pressure 26 to 50 use 60 PSI Spring
For Preset / Limited Pressure 51 to 90 use 125 PSI Spring

BOLD ITEMS ARE MOST POPULAR.

Parker Hannifin Corporation
Pneumatic Division
Richland, Michigan
www.parker.com/pneumatics

Technical Information

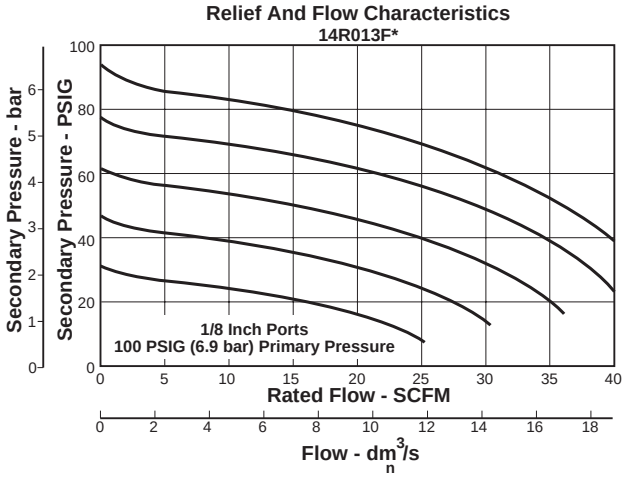

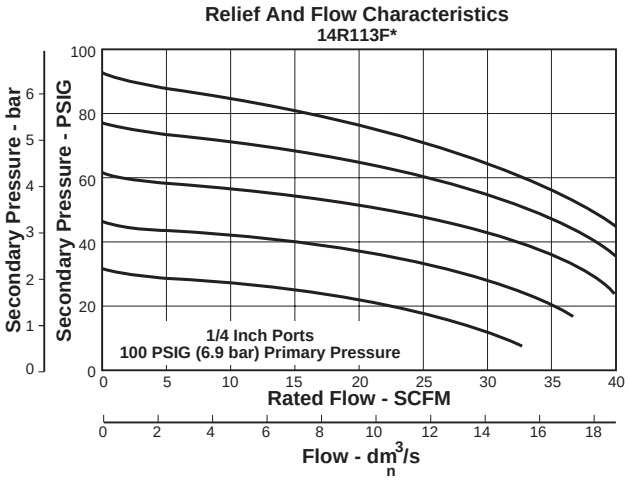

CAUTION:

REGULATOR PRESSURE ADJUSTMENT – The working range of knob adjustment is designed to permit outlet pressures within their full range. Pressure adjustment beyond this range is also possible because the knob is not a limiting device. This is a common characteristic of most industrial regulators, and limiting devices may be obtained only by special design.

For best performance, regulated pressure should always be set by increasing the pressure up to the desired setting.

⚠ WARNING

Product rupture can cause serious injury.
Do not connect regulator to bottled gas.
Do not exceed maximum primary pressure rating.

14R Regulator Kits & Accessories

Bonnet Assembly Kit L01369

Bonnet Tamperproof Kit..... P01265

Gauges – 30 psig, 1/8" NPT (0 to 2.1 bar)..... K4515N18030
60 psig, 1/8" NPT (0 to 4.1 bar)..... K4515N18060
160 psig, 1/8" NPT (0 to 11.0 bar) K4515N18160
60 psig, 1/4" NPT (0 to 4.1 bar) K4520N14060
160 psig, 1/4" NPT (0 to 11.0 bar).....K4520N14160

Mounting Bracket Kit* (Includes Panel Mount Nut)..... PS417BP

Panel Mount Nuts* – Plastic P78652
Metal P01531

Poppet / Piston Kits – Unbalanced, Non-Relieving.....PS428P
Unbalanced, Relieving.....PS426P

Springs – 1-15 psig Range (Yellow)..... P01176
1-30 psig Range (Black)..... P01175
1-60 psig Range (White) P01174
2-125 psig Range (Gold) P01173

*Tighten panel mount nut 2.8 to 3.4 Nm (25 to 30 in-lbs) of torque.

Specifications

Gauge Ports (2) .....1/8 or 1/4 Inch
(Can be used for Full Flow)

Port Threads .....1/8, 1/4 Inch

Pressure & Temperature Ratings – 0 to 300 psig (0 to 20.7 bar)
32°F to 125°F (0°C to 52°C)
Low Temperature .....-4°F to 125°F (-20°C to 52°C)

Secondary Pressure Ranges –
Standard Pressure.....2 to 125 psig (0 to 8.6 bar)
Medium Pressure.....1 to 60 psig (0 to 4.1 bar)
Medium Pressure.....1 to 30 psig (0 to 2.1 bar)
Low Pressure .....1 to 15 psig (0 to 1 bar)

Weight – 14R, 14RM, 14**L*..... 0.3 lb. (0.14 kg)

Materials of Construction

Adjusting Nut.....Brass
Adjusting Stem & Spring .....Steel
Body ..... Zinc
Bonnet, Seat, Piston & Valve Poppet ..... Plastic
Seals .....Nitrile

Parker Hannifin Corporation
Pneumatic Division
Richland, Michigan
www.parker.com/pneumatics

P3A-R Regulators – Miniature

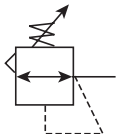

Features

- Lightweight plastic body.
- Non-rising adjusting knob.
- Solid control piston with lip seal for extended life.
- Unbalanced poppet standard.
- Two full flow 1/8" gauge ports.
- Reverse flow capability.
- High Flow: 1/8" – 13 SCFM§
  1/4" – 15 SCFM§

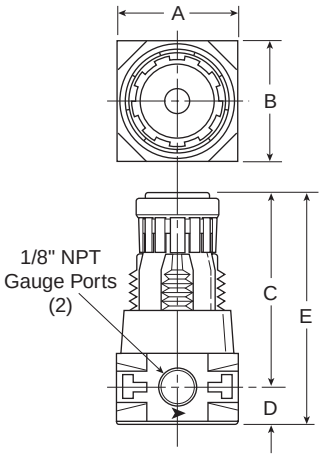

Port Size	NPT
Without Gauge	
1/8"	**P3A-RN91YNN**
1/4"	**P3A-RN92YNN**
With Gauge	
1/8"	**P3A-RN91YGN**
1/4"	**P3A-RN92YGN**

Standard part numbers shown bold. For other models refer to ordering information below.

NOTE: 1.218 Dia. (31mm) hole required for panel mounting.

§ SCFM = Standard cubic feet per minute at 100 psig inlet, 90 psig no flow secondary setting and 10 psig pressure drop.

P3A-R Regulator Dimensions		
A 1.57 (40)	**B** 1.57 (40)	**C** 2.46 (63)
D 0.46 (12)	**E** 2.92 (74)	

Inches (mm)

Ordering Information

P3A-RN	9	1	Y	N	N	N	—

Port Type
- **9 NPT Female**

Port Size
- **1 1/8 Inch**
- **2 1/4 Inch**

Relief
- **Q Non-Relieving**
- **Y Relieving**

Pressure / Gauge

Without Gauge
- **A 15 psig (0 to 1 bar)**
- **L 60 psig (0 to 4 bar)**
- **N 120 psig (0 to 8 bar)**
- **Y 30 psig (0 to 2 bar)**

With Gauge
- **B 15 psig (0 to 1 bar)**
- **G 120 psig (0 to 8 bar)**
- **M 60 psig (0 to 4 bar)**
- **Z 30 psig (0 to 2 bar)**

Options
- L* Preset Non-Adjustable
- **N No Options**
- P* Preset Adjustable
- S* Pressure Limiter Adjustable
- T* Pressure Limiter Non-Adjustable

* Inlet Pressure is 100 psig. For other pressures, contact factory.

Options
- **N None**

Preset / Pressure Limited
- **Blank None**
- XXX* Preset Pressure
- XXX* Pressure Limited

* Available Preset / Pressure Limited Range, 10 to 90 psig in 5 psig increments. For higher pressures, contact factory. (Example: 065 = 65 psig)

BOLD ITEMS ARE MOST POPULAR.

Parker Hannifin Corporation
Pneumatic Division
Richland, Michigan
www.parker.com/pneumatics

Technical Information

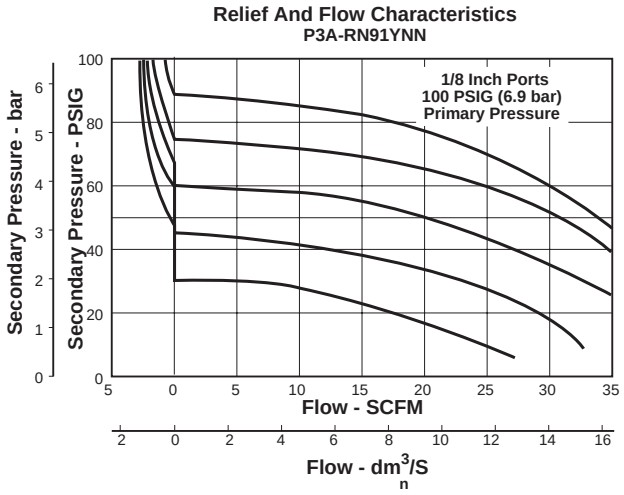

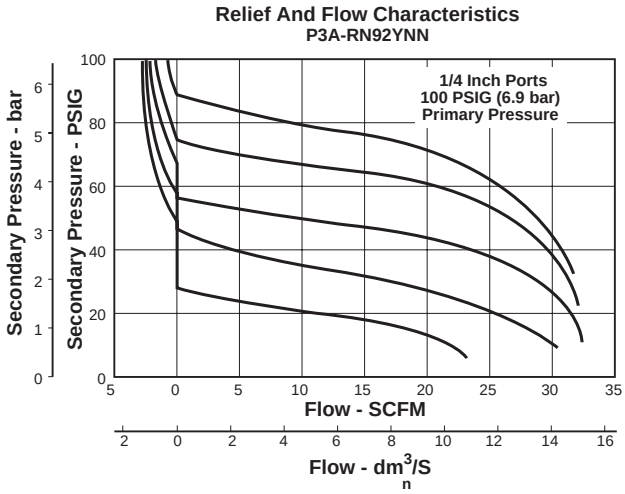

CAUTION:

REGULATOR PRESSURE ADJUSTMENT – The working range of knob adjustment is designed to permit outlet pressures within their full range. Pressure adjustment beyond this range is also possible because the knob is not a limiting device. This is a common characteristic of most industrial regulators, and limiting devices may be obtained only by special design.

For best performance, regulated pressure should always be set by increasing the pressure up to the desired setting.

⚠ WARNING

Product rupture can cause serious injury.
Do not connect regulator to bottled gas.
Do not exceed maximum primary pressure rating.

P3AR Regulator Kits & Accessories

Gauges – 30 psig, 1/8" NPT (0 to 2.1 bar) K4515N18030
60 psig, 1/8" NPT (0 to 4.1 bar) K4515N18060
160 psig, 1/8" NPT (0 to 11.0 bar) K4515N18160

Mounting Bracket Kit* (Includes Panel Mount Nut) PS417BP

Panel Mount Nut* P78652

Poppet / Piston Kits – Unbalanced, Non-Relieving PS428P
Unbalanced, Relieving PS426P

Springs – 1-15 psig Spring (Yellow) P01176
1-30 psig Spring (Black) P01175
1-60 psig Spring (White) P01174
5-110 psig Spring (Gold) P01173

*Tighten panel mount nut 2.8 to 3.4 Nm (25 to 30 in-lbs) of torque.

Specifications

Gauge Ports (2) ..... 1/8 Inch

Operating Pressure Range –		**psig**	**bar**
Primary –	Maximum	120	8.3
Secondary –			
15 psig Spring	Minimum	1	0.07
	Maximum	15	1.0
30 psig Spring	Minimum	6	0.4
	Maximum	30	2.1
60 psig Spring	Minimum	6	0.4
	Maximum	60	4.1
110 psig Spring	Minimum	6	0.4
	Maximum	110	7.6

Operating Temperature Range ..... 32°F to 125°F (0°C to 52°C)
Port Threads ..... 1/8, 1/4 Inch
Weight ..... 0.23 lb. (0.10 kg)

Materials of Construction

Adjusting Nut ..... Brass
Adjusting Stem & Spring ..... Steel
Poppet Return Spring ..... Stainless Steel
Body ..... Plastic
Bonnet, Seat & Piston ..... Plastic
Seals ..... Nitrile
Valve Poppet ..... Plastic & Nitrile

Parker Hannifin Corporation
Pneumatic Division
Richland, Michigan
www.parker.com/pneumatics

R34 Regulators – Miniature

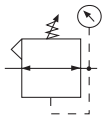

Relieving

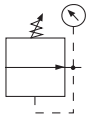

Non-Relieving

R344-02C

R342-0MC

Features

- Diaphragm operated for fast operation.
- Large Diaphragm to valve area ratio for precise regulation and high flow capacity.
- Balanced valve design for precise regulation.
- Available in 2 or 4 port design.
- Available with a manifold mount to minimize plumbing.
- Suitable for low temperature applications.
- Non-rising adjusting knob.
- 1/8" - 17 SCFM*
- 1/4" - 19 SCFM*

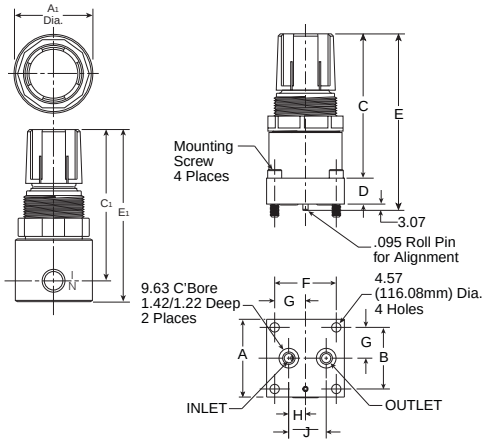

R34 Miniature Regulator Dimensions				
A 1.50 (38.1)	**A1** 1.54 (39.2)	**B** 1.20 (30.5)	**B1** 1.56 (39.6)	**C** 2.75 (69.9)
C1 2.70 (68.6)	**D** 0.50 (12.7)	**E** 3.25 (82.6)	**E1** 3.25 (82.6)	**F** 1.20 (30.5)
G 0.60 (15.2)	**H** 0.32 (8.1)	**J** 0.73 (18.5)		

Model Type	Port Size	Without Gauge	Without Gauge	Without Gauge	With Gauge	With Gauge	With Gauge
		0 to 30 psig (0.0 to 2.1 bar)	**0 to 60 psig (0.0 to 4.1 bar)**	**0 to 125 psig (0.0 to 8.6 bar)**	**0 to 30 psig (0.0 to 2.1 bar)**	**0 to 60 psig (0.0 to 4.1 bar)**	**0 to 125 psig (0.0 to 8.6 bar)**
Relieving	1/8"	R344-01A	R344-01B	R344-01C	R344-01AG	R344-01BG	R344-01CG
	1/4"	R344-02A	R344-02B	**R344-02C**	R344-02AG	R344-02BG	**R344-02CG**
	Manifold Mount	R342-0MA	R342-0MB	**R342-0MC**			

* SCFM = Standard cubic feet per minute at 100 psig inlet, 90 psig no flow secondary setting and 10 psig pressure drop.

Ordering Information

R34	4	–	02	C	G		

Number of Ports
- 2 2 Ports
- **4* 4 Ports**

* Not Available with Manifold Mount.

Thread
- **- NPT**
- G BSPP

Port
- 01 1/8"
- **02 1/4"**
- **0M Manifold Mount**

Pressure Range
- A 0-30 PSI
- B 0-60 PSI
- **C 0-125 PSI**

Options
- Blank No Options
- **G Gauge**
- K Non-Relieving Diaphragm
- P Panel Mount Nut

Options
- **Blank No Options**
- L† Preset Non-Adjustable
- P† Preset Adjustable

† Inlet Pressure is 100 psig. For other pressures, contact factory.

Preset / Pressure Limited
- **Blank None**
- XXX* Preset Pressure
- XXX* Pressure Limited

* Available Preset / Pressure Limited Range, 10 to 90 psig in 5 psig increments. For higher pressures, contact factory.
(Example: 065 = 65 psig)

BOLD ITEMS ARE MOST POPULAR.

Parker Hannifin Corporation
Pneumatic Division
Richland, Michigan
www.parker.com/pneumatics

Technical Information

Relief And Flow Characteristics
R342-0MC

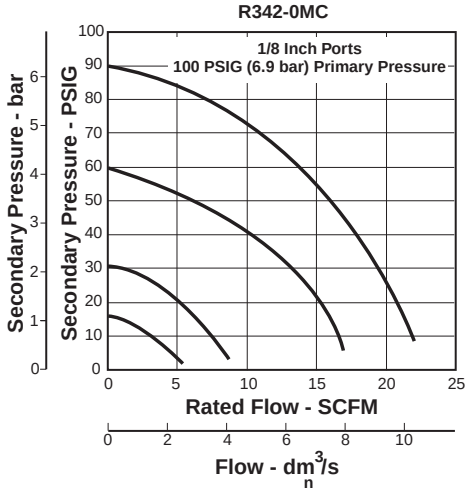

Relief And Flow Characteristics
R344-01C

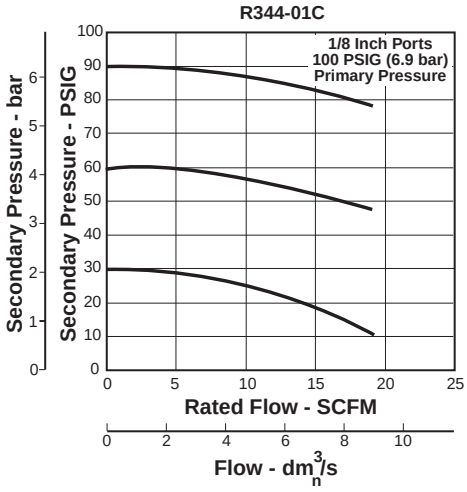

CAUTION:

REGULATOR PRESSURE ADJUSTMENT – The working range of knob adjustment is designed to permit outlet pressures within their full range. Pressure adjustment beyond this range is also possible because the knob is not a limiting device. This is a common characteristic of most industrial regulators, and limiting devices may be obtained only by special design.

For best performance, regulated pressure should always be set by increasing the pressure up to the desired setting.

⚠ WARNING

Product rupture can cause serious injury.
Do not connect regulator to bottled gas.
Do not exceed maximum primary pressure rating.

Relief And Flow Characteristics
R344-02C

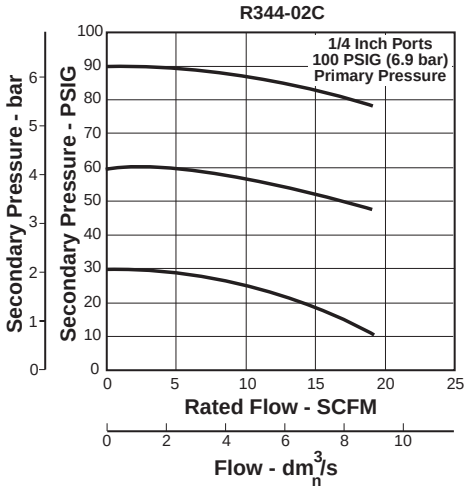

R34 Regulator Kits and Accessories

Diaphragm Assembly - Non-relieving GRP-96-726
Relieving GRP-96-725

Spring, Regulating - 0 to 30 psig (0 to 2.1 bar) GRP-95-111
0 to 60 psig (0 to 4.1 bar) GRP-96-718
0 to 125 psig (0 to 8.6 bar) GRP-96-717

Panel Mount Nut – Aluminum R05x51-A
Plastic R05x51-P

Mounting Bracket Kit (Includes Panel Mount Nut) SA161x57

Gauges – 0 to 60 psig (0 to 4.1 bar), 1-1/2" Dial Face,
1/8 NPT, CBM K4515N18060
0 to 160 psig (0 to 11.0 bar), 1-1/2" Dial Face,
1/8 NPT, CBM K4515N18160

Materials of Construction

Body ..... Aluminum
Bonnet ..... Acetal
Diaphragm & Seals ..... Nitrile
Valve Assembly ..... Brass
Springs ..... Steel
Panel Nut ..... Acetal

Specifications

Operating Temperature ..... -40° F to 150°F (-40° C to 65.5°C)
Supply Pressure ..... 300 psig Maximum (20.4 bar)
Port Threads ..... 1/8, 1/4 Inch
Gauge Ports ..... (2) Std 1/8 Inch
(No Gauge Port Version Available)
Weight ..... 25 lbs. (0.11 kg)

Parker Hannifin Corporation
Pneumatic Division
Richland, Michigan
www.parker.com/pneumatics

R24, R25 Regulators – Miniature (Air / Water Service)

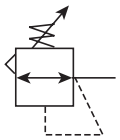

Features

- Lightweight Plastic Body
- Constructed with a Combination of N.S.F. and F.D.A. Approved Materials
- Unbalanced Poppet Standard
- Non-rising, Push-to-lock Adjusting Knob
- Compact, 3.10 inch (79mm) high by 1.60 inch (41mm) wide
- Lightweight
- Diaphragm Operated

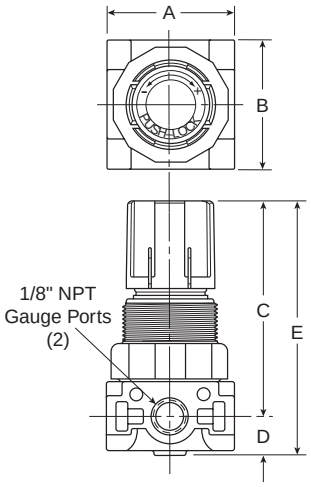

Port Size	NPT	
	Air Service Relieving	Water Service Non-Relieving
	Relieving, 0-125 Reduced Pressure, Without Gauge	
1/8"	**R25-01C**	**R24-01CK**
1/4"	**R25-02C**	**R24-02CK**

Bold Items are Most Popular.
For other models refer to ordering information below.

NOTE: 1.250 Dia. (31.8mm) hole required for panel mounting.

R24, R25 Regulator Dimensions		
A 1.60 (41)	**B** 1.60 (41)	**C** 2.61 (66)
D 0.49 (13)	**E** 3.10 (79)	

Inches (mm)

Ordering Information

R25	—	02	C	

Series
- R24 EPDM Elastomers (Water)
- **R25 Buna Elastomers (Air)**

Port Size
- **01 1/8 Inch**
- **02 1/4 Inch**

Pressure Range
- **A 0 to 25 psig (0 to 2 bar)**
- **B 0 to 60 psig (0 to 4 bar)**
- **C 0 to 125 psig (0 to 8 bar)**

Relief
- **Blank Relieving**
- K Non-Relieving (For Water Service)
- P Panel Mount Nut

BOLD ITEMS ARE MOST POPULAR.

Parker Hannifin Corporation
Pneumatic Division
Richland, Michigan
www.parker.com/pneumatics

Technical Information

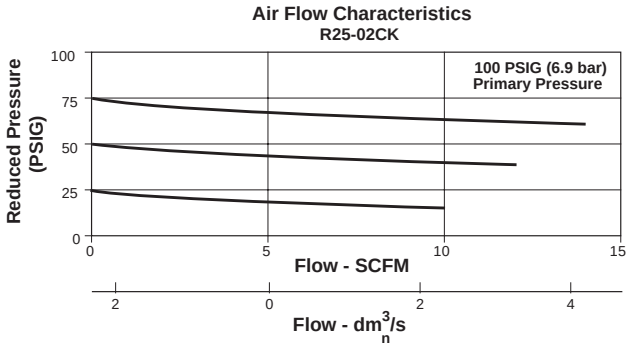

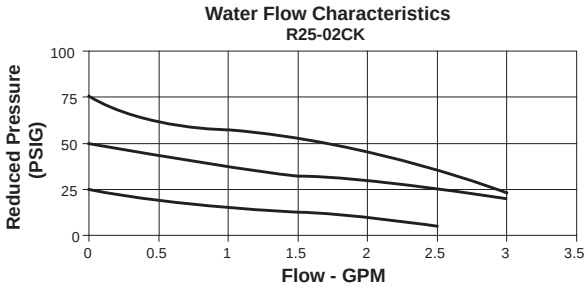

CAUTION:

REGULATOR PRESSURE ADJUSTMENT – The working range of knob adjustment is designed to permit outlet pressures within their full range. Pressure adjustment beyond this range is also possible because the knob is not a limiting device. This is a common characteristic of most industrial regulators, and limiting devices may be obtained only by special design.

For best performance, regulated pressure should always be set by increasing the pressure up to the desired setting.

⚠ WARNING

Product rupture can cause serious injury.
Do not connect regulator to bottled gas.
Do not exceed maximum primary pressure rating.

R24, R25 Regulator Kits and Accessories

Panel Mount Nut – Plastic R05X51-P
Aluminum R05X51-A

Mounting Bracket and Nut SA161X57

Service Kits – Relieving (Buna) RKR25Y
Non-Relieving (Buna) RKR25KY
Relieving (EPDM) RKR24Y
Non-Relieving (EPDM) RKR24KY

Springs – 0-25 psig Spring SPR-375-1
0-60 psig Spring SPR-376
0-125 psig Spring SPR-377

Specifications

Gauge Ports (2) ..... 1/8 Inch
(Can be used for full flow)

Pressure Rating – Maximum Inlet Pressure 150 psig .....(10.0 bar)

Port Threads ..... 1/8, 1/4 Inch

Temperature Rating ..... 40°F to 125°F (4°C to 52°C)

Weight ..... 0.25 lb. (0.11 kg)

Materials of Construction

Adjusting Screw ..... Steel

Body ..... Acetal

Bonnet and Seat ..... Acetal

Diaphragm (R25) ..... Buna N

Diaphragm (R24) ..... EPDM

Seals (R25) ..... Buna N

Seals (R24) ..... EPDM

Springs ..... Stainless Steel

Valve Poppet (R25) ..... Buna N

Valve Poppet (R24) ..... EPDM

Parker Hannifin Corporation
Pneumatic Division
Richland, Michigan
www.parker.com/pneumatics

R45, R46 Regulators – Miniature (Air / Water Service)

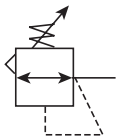

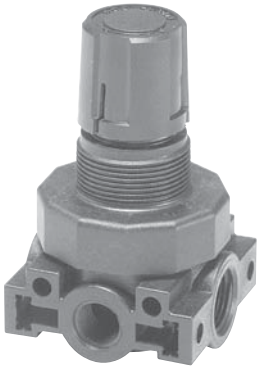

Features

- Lightweight Plastic Body
- Constructed with a Combination of N.S.F. and F.D.A. Approved Materials
- Unbalanced Poppet Standard
- Non-rising, Push-to-lock Adjusting Knob
- Compact, 3.43 inch (87.1mm) high by 2.06 inch (52.3mm) wide
- Lightweight
- Diaphragm Operated

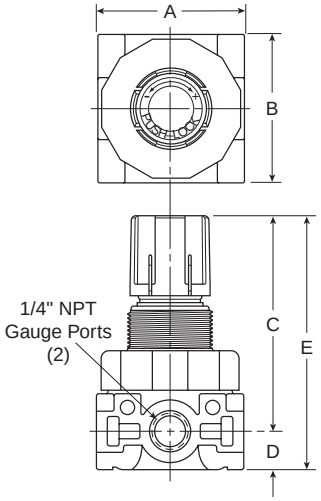

Port Size	NPT	
	Air Service Relieving	Water Service Non-Relieving
	Relieving, 0-125 Reduced Pressure, Without Gauge	
1/4"	**R45-02C**	**R46-02CK**
3/8"	**R45-03C**	**R46-03CK**

Bold Items are Most Popular.
For other models refer to ordering information below.

NOTE: 1.250 Dia. (31.8mm) hole required for panel mounting.

R45, R46 Regulator Dimensions		
A 2.06 (52)	**B** 2.06 (52)	**C** 2.90 (74)
D 0.53 (14)	**E** 3.43 (87)	

Inches (mm)

Ordering Information

R45	—	02	C	

Series
- **R45 Buna Elastomers (Air)**
- **R46 EPDM Elastomers (Water)**

Port Size
- **02 1/4 Inch**
- **03 3/8 Inch**

Pressure Range
- **A 0 to 25 psig (0 to 2 bar)**
- **B 0 to 60 psig (0 to 4 bar)**
- **C 0 to 125 psig (0 to 8 bar)**

Relief
- **Blank Relieving**
- K Non-Relieving (For Water Service)
- P Panel Mount Nut

BOLD ITEMS ARE MOST POPULAR.

Parker Hannifin Corporation
Pneumatic Division
Richland, Michigan
www.parker.com/pneumatics

Technical Information

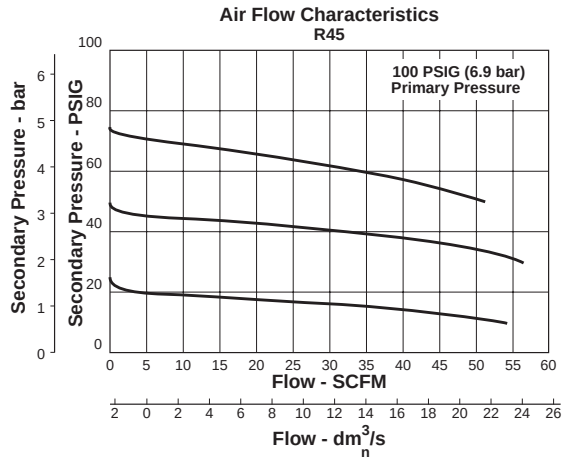

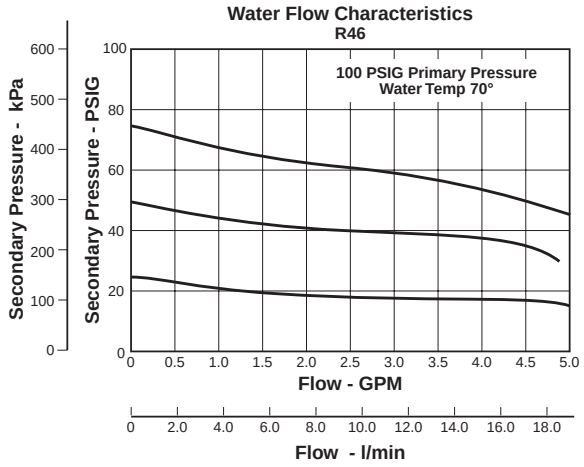

CAUTION:

REGULATOR PRESSURE ADJUSTMENT – The working range of knob adjustment is designed to permit outlet pressures within their full range. Pressure adjustment beyond this range is also possible because the knob is not a limiting device. This is a common characteristic of most industrial regulators, and limiting devices may be obtained only by special design.

For best performance, regulated pressure should always be set by increasing the pressure up to the desired setting.

⚠ WARNING

Product rupture can cause serious injury.
Do not connect regulator to bottled gas.
Do not exceed maximum primary pressure rating.

R45, R46 Regulator Kits and Accessories

Panel Mount Nut – Plastic R05X51
Aluminum R05X51A

Mounting Bracket and Nut SA161X57

Service Kits – Relieving RKR45Y
Non-Relieving RKR45KY

Springs – 0-25 psig Spring SPR-46
0-60 psig Spring SPR-47
0-125 psig Spring SPR-48

Specifications

Gauge Ports (2) ..... 1/4 Inch (Can be used for full flow)

Pressure Rating – Maximum Inlet Pressure 150 psig .....(10.0 bar)

Port Threads ..... 1/4, 3/8 Inch

Temperature Rating ..... 40°F to 125°F (4°C to 52°C)

Weight ..... 0.38 lb. (0.17 kg)

Materials of Construction

Adjusting Screw ..... Steel

Body ..... Acetal

Bonnet and Seat ..... Acetal

Diaphragm (R45) ..... Buna N

Diaphragm (R46) ..... EPDM

Seals (R45) ..... Buna N

Seals (R46) ..... EPDM

Springs ..... Stainless Steel

Valve Poppet (R45) ..... Buna N

Valve Poppet (R46) ..... EPDM

Parker Hannifin Corporation
Pneumatic Division
Richland, Michigan
www.parker.com/pneumatics

20R Regulators – Miniature (Water Service)

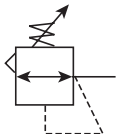

Features

- Rugged brass body for water service.
- Unbalanced poppet standard.
- Diaphragm operated for fast response.
- Non-rising adjusting knob.
- Compact, 3.06 inch (77.79mm) high by 1.56 inch (36.69mm) wide.
- High Flow: 1.25 GPM

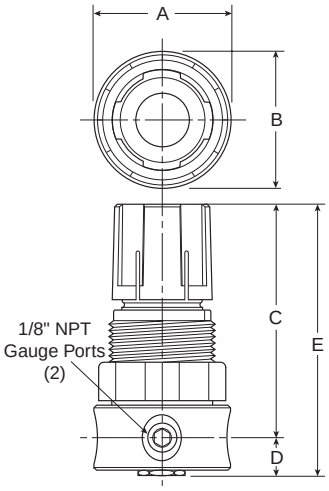

Port Size	NPT
Without Gauge	
1/8"	**20R013G***
1/4"	**20R113G***

Bold Items are Most Popular.
For other models refer to ordering information below.

NOTE: 1.25 Dia. (32mm) hole required for panel mounting.

20R Regulator Dimensions		
A 1.56 (40)	**B** 1.56 (40)	**C** 2.56 (65)
D 0.50 (13)	**E** 3.06 (78)	

Inches (mm)

Ordering Information

20R	1	13	G	*	—

Port Size
0 1/8 Inch
1 1/4 Inch

Pressure Range
11 25 psig
13 125 psig
61 60 psig

Relief
F Relieving
G Non-Relieving

Engineering Level
* Will be Entered at Factory

Port Type	
Blank	**NPT**
1	BSPP

BOLD ITEMS ARE MOST POPULAR.

Parker Hannifin Corporation
Pneumatic Division
Richland, Michigan
www.parker.com/pneumatics

Technical Information

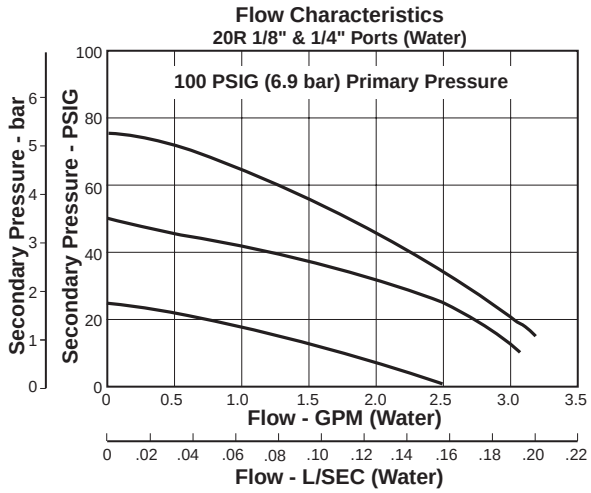

CAUTION:

REGULATOR PRESSURE ADJUSTMENT – The working range of knob adjustment is designed to permit outlet pressures within their full range. Pressure adjustment beyond this range is also possible because the knob is not a limiting device. This is a common characteristic of most industrial regulators, and limiting devices may be obtained only by special design.

For best performance, regulated pressure should always be set by increasing the pressure up to the desired setting.

⚠ WARNING

Product rupture can cause serious injury.
Do not connect regulator to bottled gas.
Do not exceed maximum primary pressure rating.

20R Regulator Kits & Accessories

Bonnet Kit PCKR364Y

Bonnet Tamperproof Kit PCKR364T

Panel Mount Nut – Aluminum R05x51-A
Plastic R05x51-P

Mounting Bracket Kit SA161X57

Repair Kits – Relieving PRKR164Y
Non-Relieveing PRKR163Y

Specifications

Gauge Ports (2) ..... 1/8 Inch

Port Threads ..... 1/8, 1/4 Inch

Pressure Rating – Maximum ..... 0 to 300 psig (0 to 20.7 bar)

Secondary Pressure Ranges –
Standard Pressure ..... 2 to 125 psig (0 to 8.6 bar)
Medium Pressure ..... 1 to 60 psig (0 to 4.1 bar)
Medium Pressure ..... 1 to 25 psig (0 to 2.1 bar)

Temperature Ratings ..... 32°F to 125°F (0°C to 52°C)

Weight ..... 0.5 lb. (0.23 kg)

Materials of Construction

Adjusting Nut & Stem ..... Steel

Body, Valve Poppet, Bottom Plug, Diaphragm Button ..... Brass

Bonnet, Knob ..... Plastic

Seals, Diaphragm ..... Buna N

Springs ..... Steel

Parker Hannifin Corporation
Pneumatic Division
Richland, Michigan
www.parker.com/pneumatics

15R Regulators – Economy

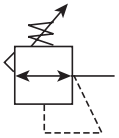

Features

- Solid control piston with resilient seat for service-free operation.
- Non-rising “locking” adjusting knob.
- Compact, 3.30 inch (84mm) high by 2.12 inch (54mm) wide.
- Easily serviced.
- High Flow: 1/4" – 21 SCFM§
  3/8" – 28 SCFM§

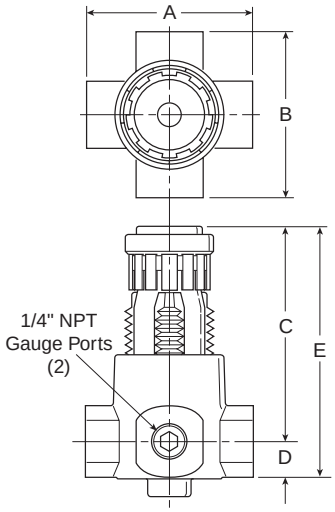

Port Size	NPT
Without Gauge	
1/4"	**15R113F***
3/8"	**15R213F***
With Gauge	
1/4"	**15R118F***
3/8"	**15R218F***

Standard part numbers shown bold. For other models refer to ordering information below.

NOTE: 1.218 Dia. (31mm) hole required for panel mounting.

§ SCFM = Standard cubic feet per minute at 100 psig inlet, 90 psig no flow secondary setting and 10 psig pressure drop.

15R Regulator Dimensions		
A 2.12 (54)	**B** 2.00 (51)	**C** 2.60 (66)
D 0.70 (18)	**E** 3.30 (84)	

Inches (mm)

Ordering Information

15R	1	13	F	*

Port Size
- **1 1/4 Inch**
- **2 3/8 Inch**

Pressure Range
- Without Gauge
- 10 30 psig
- 11 60 psig
- 12 15 psig
- **13 125 psig**
- With Gauge
- 15 30 psig
- 16 60 psig
- 17 15 psig
- **18 125 psig**

Relief
- **F Relieving**
- G Non-Relieving
- H Low Temp. Relieving
- J Low Temp. Non-Relieving

Engineering Level
- * Will be Entered at Factory

BOLD ITEMS ARE MOST POPULAR.

Parker Hannifin Corporation
Pneumatic Division
Richland, Michigan
www.parker.com/pneumatics

Technical Information

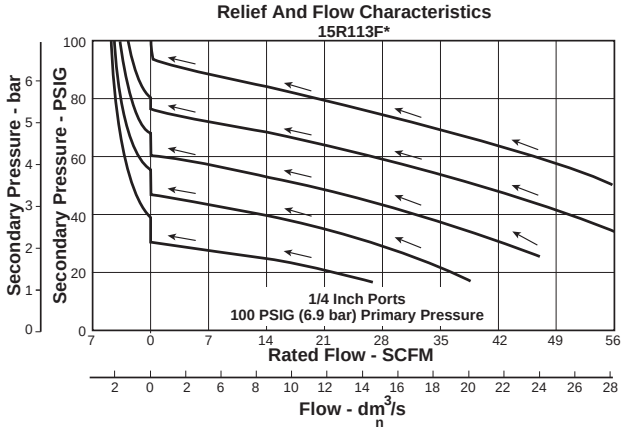

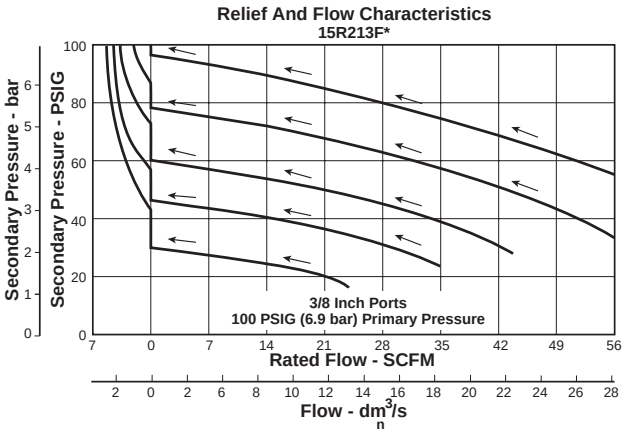

CAUTION:

REGULATOR PRESSURE ADJUSTMENT – The working range of knob adjustment is designed to permit outlet pressures within their full range. Pressure adjustment beyond this range is also possible because the knob is not a limiting device. This is a common characteristic of most industrial regulators, and limiting devices may be obtained only by special design.

For best performance, regulated pressure should always be set by increasing the pressure up to the desired setting.

⚠ WARNING

Product rupture can cause serious injury.
Do not connect regulator to bottled gas.
Do not exceed maximum primary pressure rating.

15R Regulator Kits & Accessories

Body Service Kit – Unbalanced PS424BP
Bonnet Assembly Kit L01369
Gauges – 30 psig, 1/8" NPT (0 to 2.1 bar) K4515N18030
60 psig, 1/8" NPT (0 to 4.1 bar) K4515N18060
160 psig, 1/8" NPT (0 to 11.0 bar) K4515N18160
60 psig, 1/4" NPT (0 to 4.1 bar) K4520N14060
160 psig, 1/4" NPT (0 to 11.0 bar) K4520N14160
Mounting Bracket Kit* (Includes Panel Mount Nut) PS417BP
Panel Mount Nuts* – Plastic P78652
Metal P01531
Service Kits – Non-Relieving PS422P
Relieving PS423P
Springs – 1-15 psig Range (Yellow) P01176
1-30 psig Range (Black) P01175
1-60 psig Range (White) P01174
2-125 psig Range (Gold) P01173

*Tighten panel mount nut 2.8 to 3.4 Nm (25 to 30 in-lbs) of torque.

Specifications

Gauge Ports (2) ..... 1/4 Inch
(Can be used for Full Flow)
Port Threads ..... 1/4, 3/8 Inch
Pressure & Temperature Ratings – 0 to 250 psig (0 to 17.2 bar)
32°F to 125°F (0°C to 52°C)
Low Temperature ..... -4°F to 125°F (-20°C to 52°C)
Secondary Pressure Ranges –
Standard Pressure ..... 2 to 125 psig (0 to 8.6 bar)
Medium Pressure ..... 1 to 60 psig (0 to 4.1 bar)
Medium Pressure ..... 1 to 30 psig (0 to 2.1 bar)
Low Pressure ..... 1 to 15 psig (0 to 1 bar)
Weight ..... 0.5 lb. (0.23 kg)

Materials of Construction

Adjusting Nut ..... Brass
Adjusting Stem & Spring ..... Steel
Body ..... Zinc
Bonnet, Seat, Piston & Valve Poppet ..... Plastic
Seals ..... Nitrile

Parker Hannifin Corporation
Pneumatic Division
Richland, Michigan
www.parker.com/pneumatics

05R Regulators – Economy

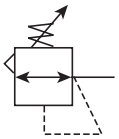

Features

- Secondary aspiration plus balanced poppet provides quick response and accurate pressure regulation.
- Rolling diaphragm for extended life.
- Removable non-rising knob for panel mounting and tamper resistance.
- Easily serviced.
- Reverse Flow.
- High Flow: 1/4" – 30 SCFM§
  3/8" – 40 SCFM§

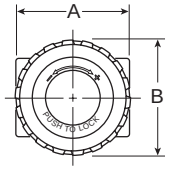

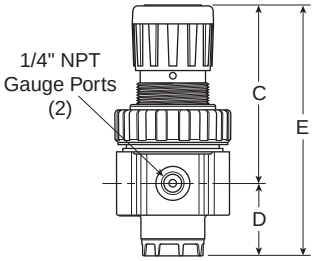

Port Size	NPT
Without Gauge	
1/4"	**05R113A***
3/8"	**05R213A***
With 160 PSI Gauge	
1/4"	**05R118A***
3/8"	**05R218A***

Standard part numbers shown bold. For other models refer to ordering information below.

NOTE: 1.53 Dia. (39mm) hole required for panel mounting.

§ SCFM = Standard cubic feet per minute at 100 psig inlet, 90 psig no flow secondary setting and 10 psig pressure drop.

05R Regulator Dimensions		
A 2.00 (51)	**B** 2.06 (52)	**C** 3.16 (80)
D 1.28 (32)	**E** 4.44 (113)	

Inches (mm)

Ordering Information

05R	1	13	A	*	—	—	---

Port Size
- **1 1/4 Inch**
- **2 3/8 Inch**

Pressure Range
- Without Gauge
- 10 30 psig
- **11 60 psig**
- **13 125 psig**
- 14 200 psig
- With Gauge**
- 17 30 psig
- **16 60 psig**
- **18 125 psig**
- 19 200 psig

** Includes 1-1/2" Dial Face Gauge

Relief
- **A Relieving**
- L Non-Relieving
- H Low Temp. Relieving
- J Low Temp. Non-Relieving

Engineering Level
- * Will be Entered at Factory

Port Type
- **Blank NPT**
- 1* BSPP
- 2 BSPT

* 1/4 & 3/8 inch meet ISO 1179-1 Standard.

Options
- **Blank No Options**
- L† Preset Non-Adjustable
- P† Preset Adjustable
- S† Pressure Limiter Max. Adjustable
- T† Pressure Limiter Max. Non- Adjustable

† Inlet Pressure is 100 psig. For other pressures, contact factory.

Preset / Pressure Limited
- **Blank None**
- XXX* Preset Pressure
- XXX* Pressure Limited

* Available Preset / Pressure Limited Range, 10 to 90 psig in 5 psig increments. For higher pressures, contact factory.
(Example: 065 = 65 psig)

Spring Type by Preset / Limited Pressure:
For Preset / Limited Pressure 10 to 25 use 30 PSI Spring
For Preset / Limited Pressure 26 to 50 use 60 PSI Spring
For Preset / Limited Pressure 51 to 90 use 125 PSI Spring

BOLD ITEMS ARE MOST POPULAR.

Parker Hannifin Corporation
Pneumatic Division
Richland, Michigan
www.parker.com/pneumatics

Technical Information

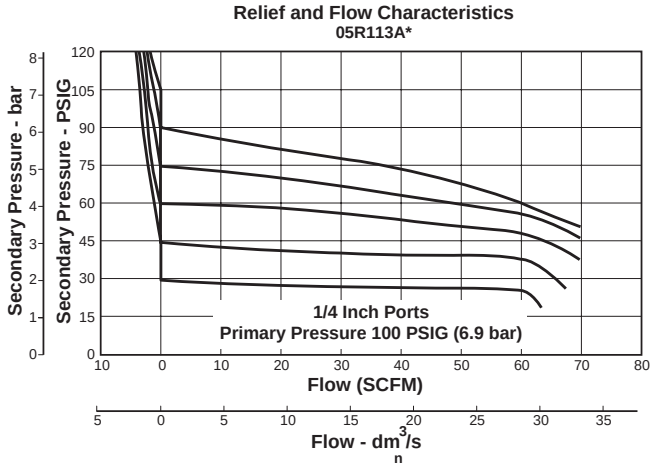

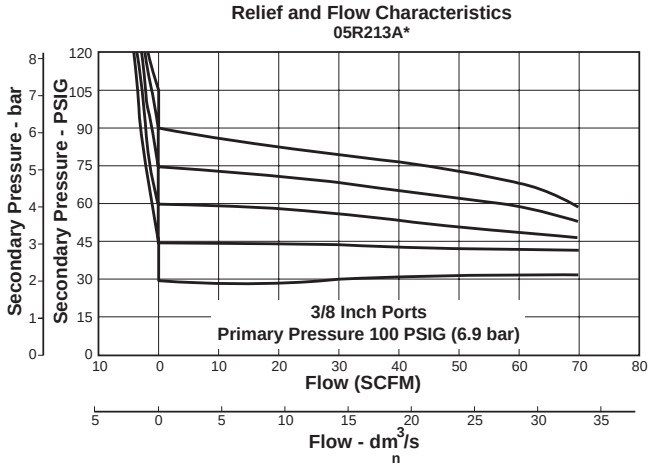

CAUTION:

REGULATOR PRESSURE ADJUSTMENT – The working range of knob adjustment is designed to permit outlet pressures within their full range. Pressure adjustment beyond this range is also possible because the knob is not a limiting device. This is a common characteristic of most industrial regulators, and limiting devices may be obtained only by special design.

For best performance, regulated pressure should always be set by increasing the pressure up to the desired setting.

⚠ WARNING

Product rupture can cause serious injury.
Do not connect regulator to bottled gas.
Do not exceed maximum primary pressure rating.

05R Regulator Kits & Accessories

Bonnet Assembly Kit PS915P
Control Knob P04420
Gauges – 1-1/2" Dial Face
30 psig (0 to 2.1 bar) K4515N14030
60 psig (0 to 4.1 bar) K4515N14060
160 psig (0 to 11.0 bar) K4515N14160
300 psig (0 to 20.0 bar) K4515N14300
2" Dial Face
60 psig (0 to 4.1 bar) K4520N14060
160 psig (0 to 11.0 bar) K4520N14160
300 psig (0 to 20.0 bar) K4520N14300
Mounting Bracket Kit PS963P
Panel Mount Nut – Metal PS964P
Springs – 1-30 psig Range P04427
1-60 psig Range P04426
2-125 psig Range P04425
2-200 psig P02934
Service Kit – Relieving PS908P
Non-Relieving PS909P

Specifications

Gauge Ports (2) ..... 1/4 Inch
Port Threads ..... 1/4, 3/8 Inch
Primary Pressure Rating –
Maximum Primary Pressure ..... 300 psig (17.2 bar) Max.
For Secondary Pressure Ranges see above charts.
Temperature Rating ..... 32°F to 175°F (0°C to 80°C)
Low Temperature ..... -4°F to 125°F (-20°C to 52°C)
Weight ..... 1.1 lb. (0.49 kg)

Materials of Construction

Adjusting Stem ..... Brass
Bonnet ..... Plastic
Body ..... Zinc
Collar, Knob ..... Plastic
Diaphragm ..... Nitrile
Poppet & Cap ..... Plastic
Seals ..... Nitrile
Springs – Poppet & Control ..... Steel

Parker Hannifin Corporation
Pneumatic Division
Richland, Michigan
www.parker.com/pneumatics

06R Regulators – Compact

Features

- Secondary aspiration plus balanced poppet provides quick response and accurate pressure regulation.
- Rolling diaphragm for extended life.
- Two high flow 1/4" gauge ports can be used as additional outlets.
- Easily serviced.
- Removable non-rising knob for panel mounting and tamper resistance.
- High Flow: 1/4" – 53 SCFM§
  3/8" – 60 SCFM§
  1/2" – 75 SCFM§

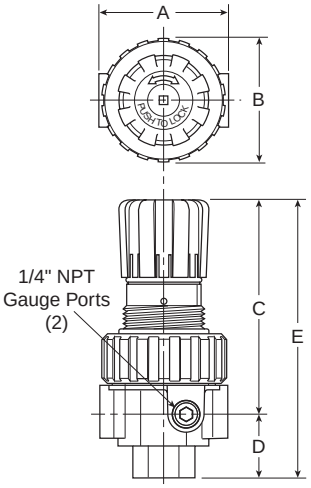

Port Size	NPT
Without Gauge	
1/4"	**06R113A***
3/8"	**06R213A***
1/2"	**06R313A***
With 160 PSI Gauge	
1/4"	**06R118A***
3/8"	**06R218A***
1/2"	**06R318A***

Standard part numbers shown bold. For other models refer to ordering information below.

NOTE: 2.00 Dia. (51mm) hole required for panel mounting.

§ SCFM = Standard cubic feet per minute at 100 psig inlet, 90 psig no flow secondary setting and 10 psig pressure drop.

06R Regulator Dimensions		
A 2.81 (71)	**B** 2.74 (70)	**C** 4.69 (119)
D 1.39 (35)	**E** 6.08 (154)	

Inches (mm)

⚠ WARNING

Product rupture can cause serious injury.
Do not connect regulator to bottled gas.
Do not exceed maximum primary pressure rating.

Ordering Information

06R	1	13	A	*	—	—	---

Port Size
- **1 1/4 Inch**
- **2 3/8 Inch**
- **3 1/2 Inch**

Pressure Range
- Without Gauge
- 10 30 psig
- **11 60 psig**
- **13 125 psig**
- 15 250 psig
- With Gauge**
- 17 30 psig
- **16 60 psig**
- **18 125 psig**
- 21 250 psig

** Includes 1-1/2" Dial Face Gauge

Relief
- **A Relieving**
- L Non-Relieving
- H Low Temp. Relieving
- J Low Temp. Non-Relieving

Engineering Level
- * Will be Entered at Factory

Port Type
- **Blank NPT**
- 1* BSPP
- 2 BSPT

* 1/4 & 3/8 inch meet ISO 1179-1 Standard.

Options
- **Blank No Options**
- L† Preset Non-Adjustable
- P† Preset Adjustable
- R Reverse Flow

† Inlet Pressure is 100 psig. For other pressures, contact factory.

Preset / Pressure Limited
- **Blank None**
- XXX* Preset Pressure

* Available Preset / Pressure Limited Range, 10 to 90 psig in 5 psig increments. For higher pressures, contact factory.
(Example: 065 = 65 psig)

Spring Type by Preset / Limited Pressure:
For Preset / Limited Pressure 10 to 25 use 30 PSI Spring
For Preset / Limited Pressure 26 to 50 use 60 PSI Spring
For Preset / Limited Pressure 51 to 90 use 125 PSI Spring

BOLD ITEMS ARE MOST POPULAR.

Parker Hannifin Corporation
Pneumatic Division
Richland, Michigan
www.parker.com/pneumatics

Technical Information

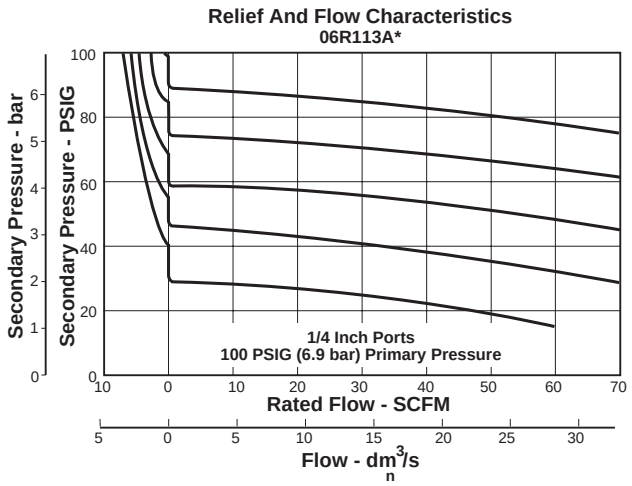

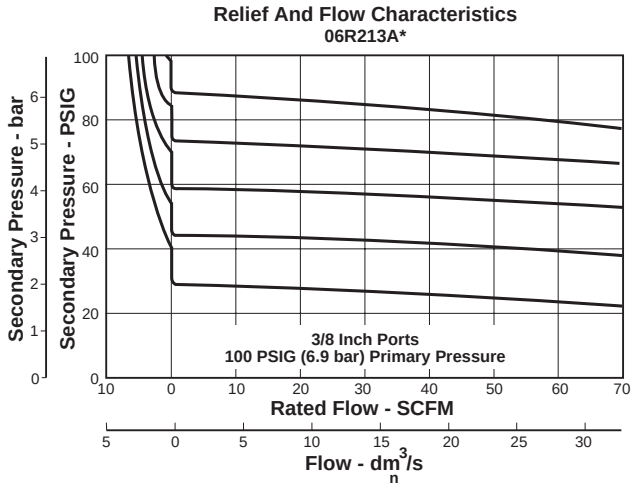

CAUTION:

REGULATOR PRESSURE ADJUSTMENT –
The working range of knob adjustment is designed to permit outlet pressures within their full range. Pressure adjustment beyond this range is also possible because the knob is not a limiting device. This is a common characteristic of most industrial regulators, and limiting devices may be obtained only by special design.

For best performance, regulated pressure should always be set by increasing the pressure up to the desired setting.

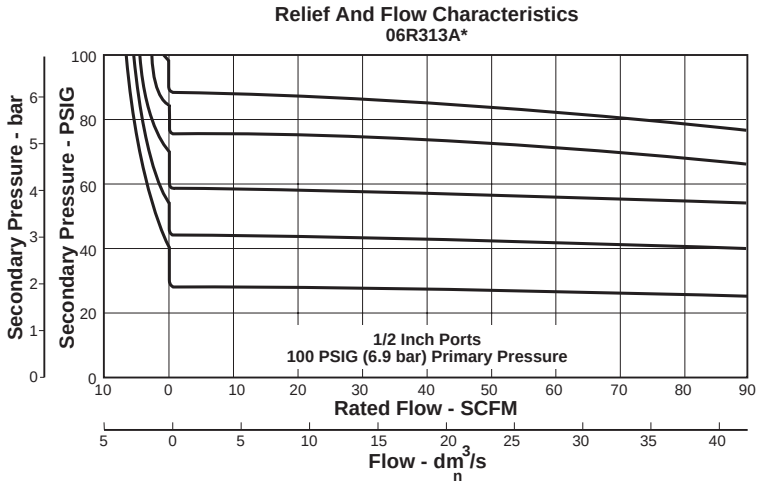

06R Regulator Kits & Accessories

Bonnet Assembly Kit PS715P

Control Knob P04069B

Gauges – 60 psig (0 to 4.1 bar) K4520N14060
160 psig (0 to 11.0 bar) K4520N14160
300 psig (0 to 20.0 bar) K4520N14300

Mounting Bracket Kit (Includes Panel Mount Nut) PS707P

Panel Mount Nut – Plastic P04082
Metal P04079B

Reverse Flow Service Conversion Kit –
Relieving PS708RP

Service Kit – Relieving (Includes Poppet) PS708P
Non-Relieving (Includes Poppet) PS709P

Springs – 1-30 psig Range P01698
1-60 psig Range P04062
2-125 psig Range P04063
5-250 psig Range P04064

Tamperproof Kit PS737P

Specifications

Gauge Ports (2) ..... 1/4 Inch
(Can be used as additional High Flow 1/4 Inch Outlet Ports)

Port Threads ..... 1/4, 3/8, 1/2 Inch

Primary Pressure Rating –
Maximum Primary Pressure ..... 250 psig (17.2 bar)

Secondary Pressure Ranges –
Standard Pressure ..... 2 to 125 psig (0 to 8.6 bar)
Low Pressure ..... 1 to 60 psig (0 to 4.1 bar)
High Pressure ..... 5 to 250 psig (0.4 to 17.2 bar)

Temperature Rating ..... 32°F to 175°F (0°C to 80°C)
Low Temperature ..... -4°F to 125°F (-20°C to 52°C)

Weight ..... 1.6 lb. (0.7 kg)

Materials of Construction

Adjusting Stem ..... Steel

Body ..... Zinc

Bonnet, Piston Stem, Valve Poppet & Cap ..... Plastic

Collar, Knob ..... Plastic

Diaphragm ..... Nitrile

Seals ..... Nitrile

Springs – Poppet ..... Stainless
Control ..... Steel

Parker Hannifin Corporation
Pneumatic Division
Richland, Michigan
www.parker.com/pneumatics

07R Regulators – Standard

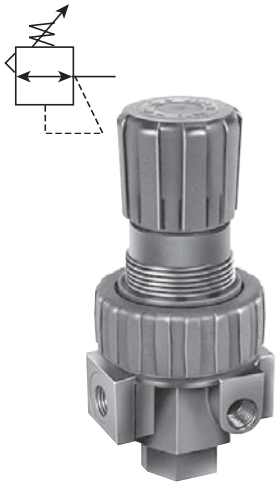

Features

- Secondary aspiration plus balanced poppet provides quick response and accurate pressure regulation.
- Rolling diaphragm for extended life.
- Two high flow 1/4" gauge ports can be used as additional outlets.
- Easily serviced.
- Removable non-rising knob for panel mounting and tamper resistance.
- High Flow: 3/8" – 70 SCFM§
  1/2" – 90 SCFM§
  3/4" – 90 SCFM§

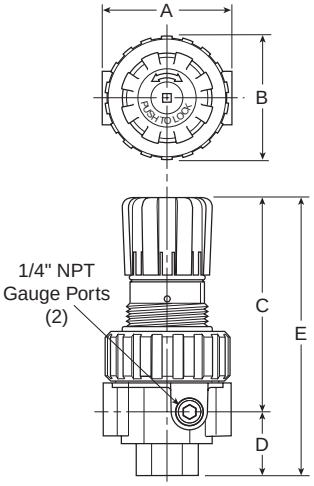

Port Size	NPT
Without Gauge	
3/8"	**07R213A***
1/2"	**07R313A***
3/4"	**07R413A***
With 160 PSI Gauge	
3/8"	**07R218A***
1/2"	**07R318A***
3/4"	**07R418A***

Standard part numbers shown bold. For other models refer to ordering information below.

NOTE: 2.00 Dia. (51mm) hole required for panel mounting.

§ SCFM = Standard cubic feet per minute at 100 psig inlet, 90 psig no flow secondary setting and 10 psig pressure drop.

07R Regulator Dimensions		
A 3.24 (82)	**B** 2.74 (70)	**C** 4.79 (122)
D 1.61 (41)	**E** 6.40 (163)	

Inches (mm)

⚠ WARNING

Product rupture can cause serious injury.
Do not connect regulator to bottled gas.
Do not exceed maximum primary pressure rating.

Ordering Information

07R	3	13	A	*	—	—	---

Port Size
- **2 3/8 Inch**
- **3 1/2 Inch**
- **4 3/4 Inch**

Pressure Range
- Without Gauge
- 10 30 psig
- **11 60 psig**
- **13 125 psig**
- 15 250 psig
- With Gauge**
- 17 30 psig
- **16 60 psig**
- **18 125 psig**
- 21 250 psig

** Includes 1-1/2" Dial Face Gauge

Relief
- **A Relieving**
- L Non-Relieving
- H Low Temp. Relieving
- J Low Temp. Non-Relieving

Engineering Level
- * Will be Entered at Factory

Port Type
- **Blank NPT**
- 1* BSPP
- 2 BSPT

* 3/8 & 1/2 inch meet ISO 1179-1 Standard.

Options
- **Blank No Options**
- L† Preset Non-Adjustable
- P† Preset Adjustable
- R Reverse Flow

† Inlet Pressure is 100 psig. For other pressures, contact factory.

Preset / Pressure Limited
- **Blank None**
- XXX* Preset Pressure

* Available Preset / Pressure Limited Range, 10 to 90 psig in 5 psig increments. For higher pressures, contact factory.
(Example: 065 = 65 psig)

Spring Type by Preset / Limited Pressure:
For Preset / Limited Pressure 10 to 25 use 30 PSI Spring
For Preset / Limited Pressure 26 to 50 use 60 PSI Spring
For Preset / Limited Pressure 51 to 90 use 125 PSI Spring

BOLD ITEMS ARE MOST POPULAR.

Parker Hannifin Corporation
Pneumatic Division
Richland, Michigan
www.parker.com/pneumatics

Technical Information

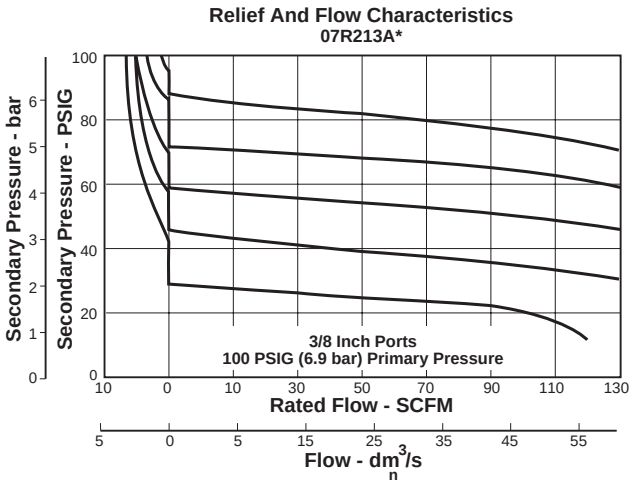

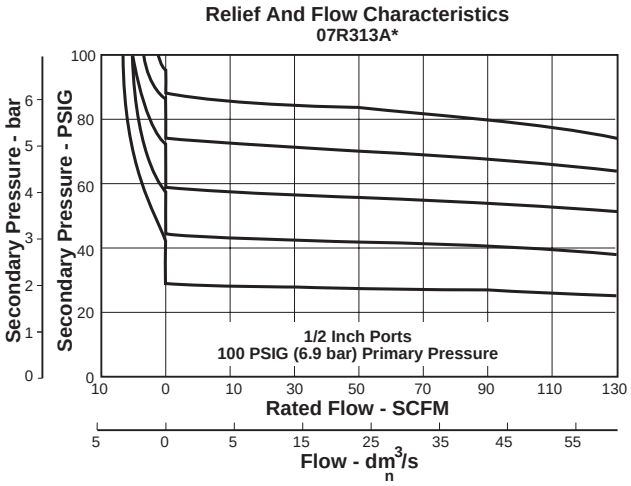

CAUTION:

REGULATOR PRESSURE ADJUSTMENT –
The working range of knob adjustment is designed to permit outlet pressures within their full range. Pressure adjustment beyond this range is also possible because the knob is not a limiting device. This is a common characteristic of most industrial regulators, and limiting devices may be obtained only by special design.

For best performance, regulated pressure should always be set by increasing the pressure up to the desired setting.

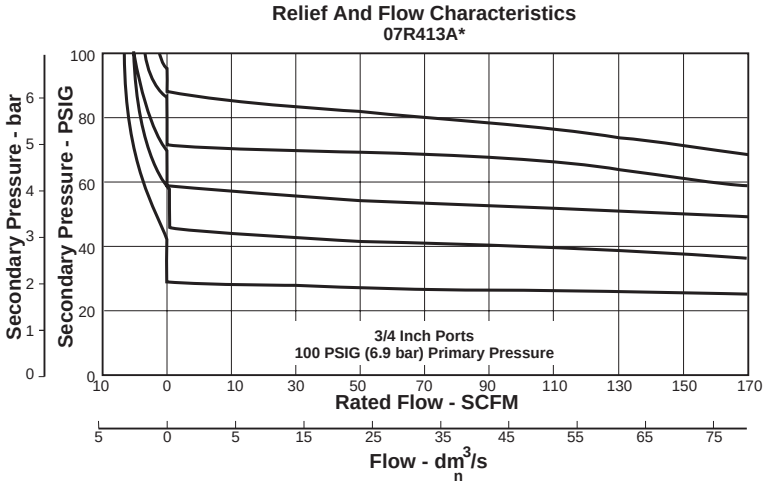

07R Regulator Kits & Accessories

Bonnet Assembly Kit PS715P

Control Knob P04069B

Gauges – 60 psig (0 to 4.1 bar) K4520N14060
160 psig (0 to 11.0 bar) K4520N14160
300 psig (0 to 20.0 bar) K4520N14300

Mounting Bracket Kit (Includes Panel Mount Nut) PS807P

Panel Mount Nut – Plastic P04082
Metal P04079B

Reverse Flow Service Conversion Kit –
Relieving PS808RP

Service Kit – Relieving (Includes Poppet) PS808P
Non-Relieving (Includes Poppet) PS809P

Springs – 1-30 psig Range P01698
1-60 psig Range P04062
2-125 psig Range P04063
5-250 psig Range P04064

Tamperproof Kit PS737P

Specifications

Gauge Ports (2) ..... 1/4 Inch
(Can be used as additional High Flow 1/4 Inch Outlet Ports)

Port Threads ..... 3/8, 1/2, 3/4 Inch

Primary Pressure Rating –
Maximum Primary Pressure ..... 250 psig (17.2 bar)

Secondary Pressure Ranges –
Standard Pressure ..... 2 to 125 psig (0 to 8.6 bar)
Low Pressure ..... 1 to 60 psig (0 to 4.1 bar)
High Pressure ..... 5 to 250 psig (0.4 to 17.2 bar)

Temperature Rating ..... 32°F to 175°F (0°C to 80°C)
Low Temperature ..... -4°F to 125°F (-20°C to 52°C)

Weight ..... 2.5 lb. (1.1 kg)

Materials of Construction

Adjusting Stem ..... Steel

Body ..... Zinc

Bonnet, Piston Stem, Valve Poppet & Cap ..... Plastic

Collar, Knob ..... Plastic

Diaphragm ..... Nitrile

Seals ..... Nitrile

Springs – Poppet ..... Stainless
Control ..... Steel

Parker Hannifin Corporation
Pneumatic Division
Richland, Michigan
www.parker.com/pneumatics

P3NR Regulators – Hi-Flow

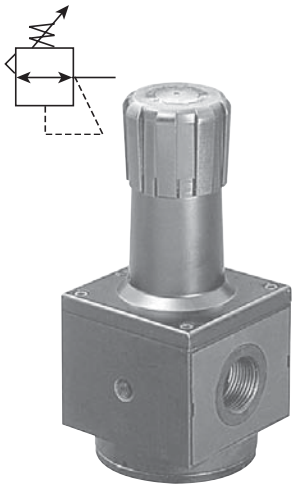

Features

- Port blocks (PB) available to provide 1-1/2" port extension to 1" ported bodies.
- Self relieving feature plus balanced poppet provides quick response and accurate pressure regulation.
- Solid control piston for extended life.
- High Flow: 3/4" – 200 SCFM§
  1" – 300 SCFM§
  1-1/2" – 300 SCFM§

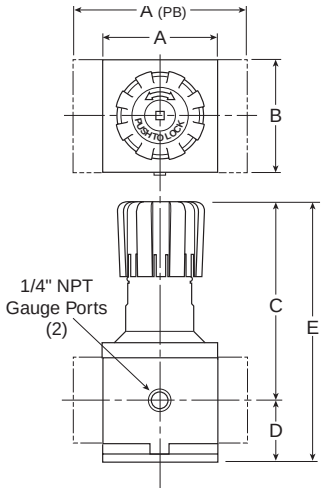

Port Size	NPT
Without Gauge	
3/4"	**P3NRA96BNN**
1"	**P3NRA98BNN**
1-1/2"	**P3NRA9PBNN**
With 160 PSI Gauge	
3/4"	**P3NRA96BNG**
1"	**P3NRA98BNG**
1-1/2"	**P3NRA9PBNG**

Standard part numbers shown bold. For other models refer to ordering information below.

NOTE: 2.00 Dia. (51mm) hole required for panel mounting.

§ SCFM = Standard cubic feet per minute at 100 psig inlet, 90 psig no flow secondary setting and 10 psig pressure drop.

P3NR Regulator Dimensions		
A 3.62 (92)	**A (PB)** 5.91 (150)	**B** 3.62 (92)
C 6.38 (162)	**D** 2.08 (53)	**E** 8.46 (215)

Inches (mm)

⚠ WARNING

Product rupture can cause serious injury.
Do not connect regulator to bottled gas.
Do not exceed maximum primary pressure rating.

Ordering Information

P3N	R	A	9	8	B	N	N

Design Level

Port Type
- 1* G Thread (BSPP) Female
- 2 Rc Thread (BSPT) Female
- **9 NPT Female**

* 3/4 & 1 inch meet ISO 1179-1 Standard.

Port Size
- **6 3/4" (w/o Port Blocks)**
- **8 1" (w/o Port Blocks)**
- **P 1-1/2" Port Blocks (w/ 1" Ported Body)**

Relief
- **B Relieving**
- N Non-Relieving

Adjustment
- **N Non-Rising Knob**

Pressure Gauge

Without Gauge
- L 60 PSI (0 to 4 bar)
- **N 125 PSI (0 to 8 bar)**
- H 250 PSI (0 to 17 bar)

With Gauge
- M 60 PSI (0 to 4 bar)
- **G 125 PSI (0 to 8 bar)**
- J 250 PSI (0 to 17 bar)

BOLD ITEMS ARE MOST POPULAR.

Parker Hannifin Corporation
Pneumatic Division
Richland, Michigan
www.parker.com/pneumatics

Technical Information

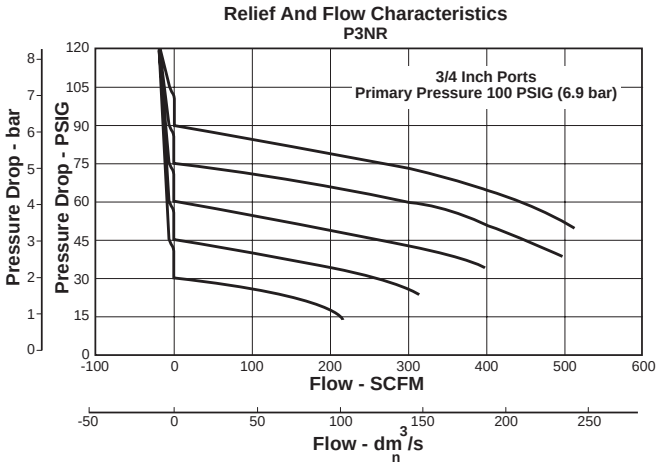

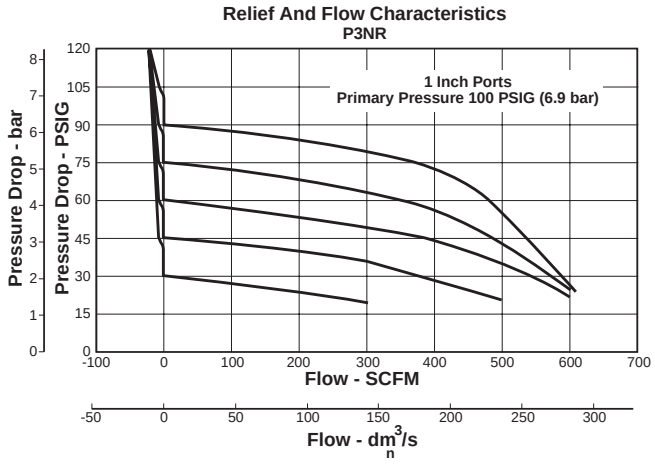

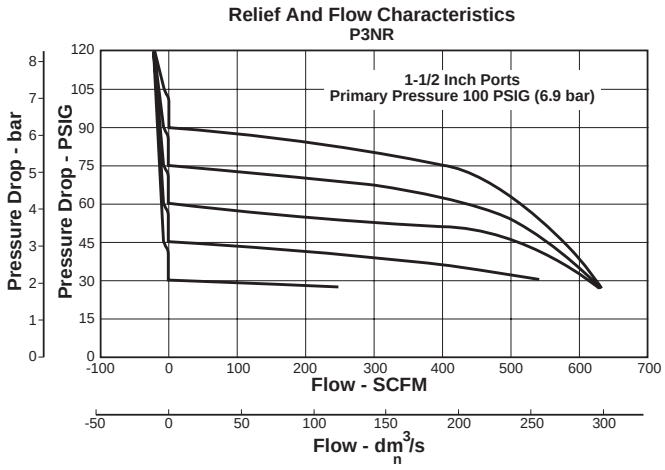

CAUTION:

REGULATOR PRESSURE ADJUSTMENT –
The working range of knob adjustment is designed to permit outlet pressures within their full range. Pressure adjustment beyond this range is also possible because the knob is not a limiting device. This is a common characteristic of most industrial regulators, and limiting devices may be obtained only by special design.

For best performance, regulated pressure should always be set by increasing the pressure up to the desired setting.

P3NR Regulator Kits & Accessories

Control Knob P3NKA00PN
Gauges – 60 psig (0 to 4.1 bar) K4520N14060
160 psig (0 to 11.0 bar) K4520N14160
300 psig (0 to 20.0 bar) K4520N14300
Mounting Bracket Kit* P3NKA00MW
Service Kit – Relieving P3NKA00RR
Non-Relieving P3NKA00RN
Springs – 1-60 psig Range C10A1304
2-125 psig Range C10A1308
5-250 psig Range C10A1317

* If 1-1/2 BSPP E02 fittings are required, use P3NKA0BMW.

Specifications

Gauge Ports (2) ..... 1/4 Inch
(Can be used as additional High Flow 1/4 Inch Outlet Ports)
Port Threads ..... 3/4, 1, 1-1/2 Inch
Primary Pressure Rating –
Maximum Primary Pressure ..... 250 psig (17.2 bar)
Temperature Rating ..... 32°F to 175°F (0°C to 80°C)
Weight – 3/4" ..... 4.2 lb. (1.9 kg)
1" ..... 4.2 lb. (1.9 kg)
1-1/2" † ..... 5.3 lb. (2.4 kg)

Materials of Construction

Adjusting Stem ..... Steel
Body ..... Aluminum
Bonnet ..... Aluminum
Knob ..... Plastic
Piston ..... Plastic
Poppet Assembly ..... Brass
Seals ..... Nitrile
Springs – Poppet & Control ..... Steel

† 1" Port Body with 1-1/2" Port Block.

Parker Hannifin Corporation
Pneumatic Division
Richland, Michigan
www.parker.com/pneumatics

R119 Regulators – Hi-Flow

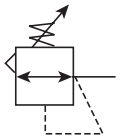

Features

- High flow performance featuring rugged design for the most demanding applications.
- Ideal for those installations calling for constant pressure with wide variation in flow.
- Diaphragm operated design with balanced poppet design for quick and accurate regulation.
- Secondary aspiration plus balanced poppet provides quick response and accurate pressure regulation.
- Heavy duty tee handle adjustment.
- Reverse flow version available.
- High Flow: 3/4" – 300 SCFM§
  1" – 400 SCFM§
  1-1/4" & 1-1/2" – 500 SCFM§

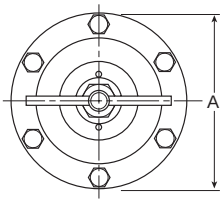

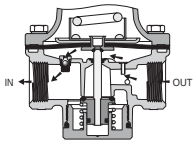

X80 Reverse Flow Option

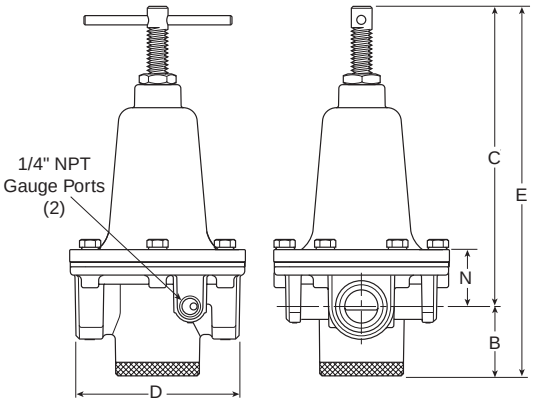

Port Size	NPT Relieving
Without Gauge 0-125 psig Reduced Pressure	
3/4"	**R119-06C**
1"	**R119-08C**
1-1/4"	**R119-10C**
1-1/2"	**R119-12C**
With Gauge 0-125 psig Reduced Pressure	
3/4"	**R119-06CG**
1"	**R119-08CG**
1-1/4"	**R119-10CG**
1-1/2"	**R119-12CG**

Standard part numbers shown bold. For other models refer to ordering information below.

§ SCFM = Standard Cubic Feet Per Minute at 100 psig Inlet, 75 psig No Flow Secondary Setting, and 20 psig Pressure Drop.

R119-06C, R119-08C Regulator Dimensions					
A	**B**	**C**	**D**	**E**	**N**
4.69 (119)	1.87 (47)	8.15 (207)	4.38 (111)	10.02 (255)	1.61 (41)
R119-10C, R119-12C Regulator Dimensions					
A	**B**	**C**	**D**	**E**	**N**
4.94 (125)	1.81 (46)	8.53 (217)	4.94 (125)	10.34 (263)	1.99 (50.6)

inches (mm)

⚠ WARNING

Product rupture can cause serious injury.
Do not connect regulator to bottled gas.
Do not exceed maximum primary pressure rating.

Ordering Information

R	119	—	06	C	G	/**

Port Threads
- **— NPT**
- G BSPP

Port Size
- **06 3/4 Inch**
- **08 1 Inch**
- **10 1-1/4 Inch**
- **12 1-1/2 Inch**

Reduced Pressure Range
- **C 0-125 psig**
- D 0-250 psig

Options
- **Blank None**
- **G Gauge**
- K Non-Relieving
- X64‡ Fluorocarbon O-Rings and Diaphragm
- X80† Reverse Flow

Engineering Level
- * Will be Entered at Factory

† Reverse flow for use downstream of control valves.

‡ Brass Bottom Plug Standard with X64 Option.

BOLD ITEMS ARE MOST POPULAR.

Parker Hannifin Corporation
Pneumatic Division
Richland, Michigan
www.parker.com/pneumatics

Technical Information

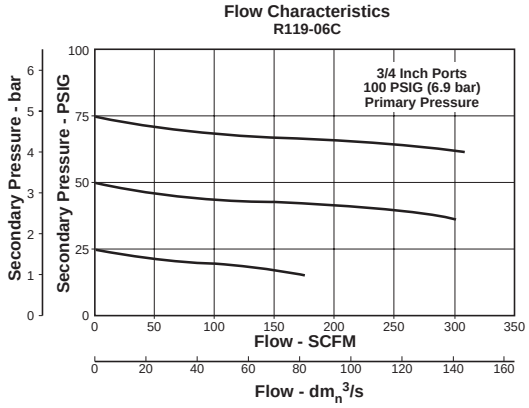

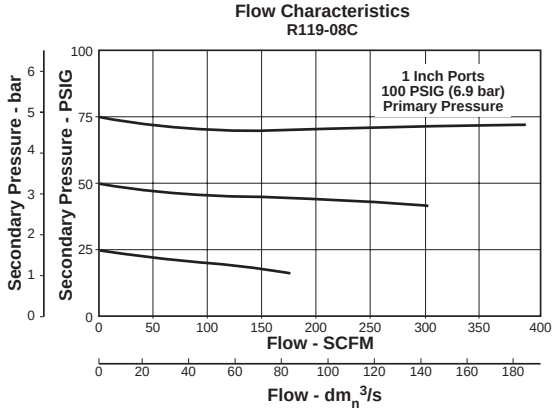

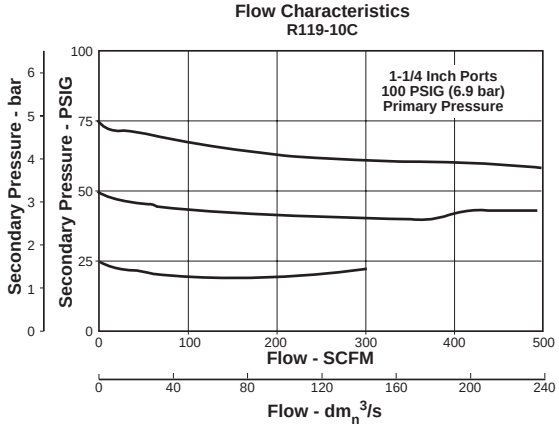

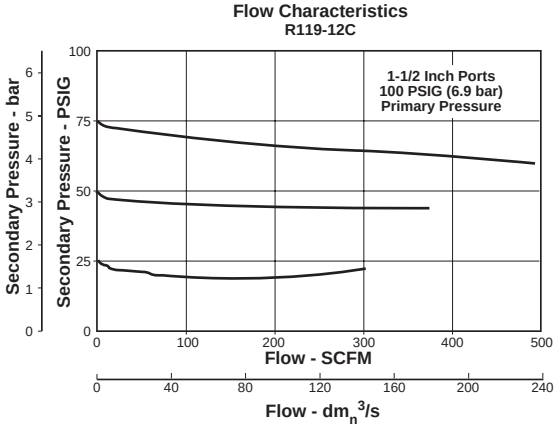

CAUTION:

REGULATOR PRESSURE ADJUSTMENT –

The working range of knob adjustment is designed to permit outlet pressures within their full range. Pressure adjustment beyond this range is also possible because the knob is not a limiting device. This is a common characteristic of most industrial regulators, and limiting devices may be obtained only by special design.

For best performance, regulated pressure should always be set by increasing the pressure up to the desired setting.

R119 Regulator Kits & Accessories

Gauges –

2" Dial Size, 1/4" Back Connection
0 to 60 psig (0 to 400 kPa) K4520N14060

2" Dial Size, 1/4" Back Connection
0 to 160 psig (0 to 1100 kPa) K4520N14160

2" Dial Size, 1/4" Back Connection
0 to 300 psig (0 to 2068 kPa) K4520N14300

Mounting Bracket Kit 18B57

Repair Kits –

Non-Relieving Diaphragm,
Valve Assembly (3/4", 1") RK118B

Non-Relieving Diaphragm,
Valve Assembly (1-1/4", 1-1/2") RK118D

Relieving Diaphragm,
Valve Assembly (3/4", 1") RK119B

Relieving Diaphragm,
Valve Assembly (1-1/4", 1-1/2") RK119D

For Fluorocarbon Repair Kits, add X64 to Kit Number suffix.

Specifications

Gauge Ports (2) ..... 1/4 Inch

Port Threads ..... 3/4, 1, 1-1/4, 1-1/2 Inch

Reduced Pressure Range ..... 2 to 125 psig (0.15 to 8.5 bar)

Supply Pressure ..... 300 psig Maximum (20.4 bar)

Temperature Rating ..... 40°F to 125°F (4.4°C to 52°C)

Weight –

R119-06, R119-08 ..... 6.2 lb. (2.81 kg) / Unit
25 lb. (11.34 kg) / 4-Unit Master Pack

R119-10, R119-12 ..... 7.2 lb. (3.27 kg) / Unit
29 lb. (13.15 kg) / 4-Unit Master Pack

Materials of Construction

Adjusting Screw, Springs ..... Steel

Body, Spring Cage ..... Zinc

Bottom Plug, Innervalve ..... Brass

Seals ..... Buna N

Parker Hannifin Corporation
Pneumatic Division
Richland, Michigan
www.parker.com/pneumatics

09R Regulators – Hi-Flow

Features

- Piston design for reduced downtime.
- High flow.
- Balanced poppet for quick and accurate regulation.
- Two full flow 1/4" gauge ports which can be used as additional outlets.
- Self relieving piston standard.
- High Flow: 2" – 1000 SCFM§

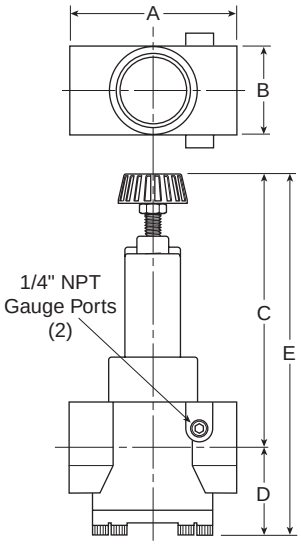

Port Size	NPT
Without Gauge	
2"	**09R813B***

Standard part numbers shown bold. For other models refer to ordering information below.

§ SCFM = Standard cubic feet per minute at 100 psig inlet, 90 psig no flow secondary setting and 10 psig pressure drop.

09 Regulator Dimensions		
A 5.30 (135)	**B** 3.60 (91)	**C** 9.10 (231)
D 2.80 (71)	**E** 11.90 (302)	

Inches (mm)

Ordering Information

09R	8	13	B	*

Port Size
8 2 Inch

Pressure Range
13 125 psig
15 180 psig

Relief
B Relieving
M Non-Relieving

Engineering Level
* Will be Entered at Factory

BOLD ITEMS ARE MOST POPULAR.

Parker Hannifin Corporation
Pneumatic Division
Richland, Michigan
www.parker.com/pneumatics

Technical Information

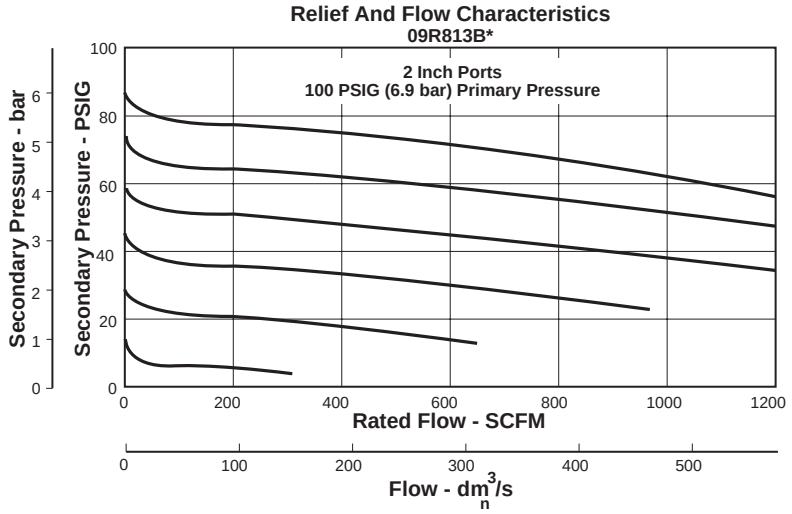

CAUTION:

REGULATOR PRESSURE ADJUSTMENT – The working range of knob adjustment is designed to permit outlet pressures within their full range. Pressure adjustment beyond this range is also possible because the knob is not a limiting device. This is a common characteristic of most industrial regulators, and limiting devices may be obtained only by special design.

For best performance, regulated pressure should always be set by increasing the pressure up to the desired setting.

⚠ WARNING

Product rupture can cause serious injury.
Do not connect regulator to bottled gas.
Do not exceed maximum primary pressure rating.

09R Regulator Kits & Accessories

Body Service Kit PS603P

Gauges – 160 psig (0 to 11.0 bar) K4520N14160
300 psig (0 to 20 bar) K4520N14300

Mounting Bracket Kit PS605P

Service Kit – Non-Relieving PS604P
Relieving PS626P

Springs – 0 to 125 psig Range PS602P
0 to 180 psig Range PS627

Specifications

Gauge Ports (2) ..... 1/4 Inch
(Can be used as additional Full Flow 1/4 Inch Outlet Ports)

Port Threads ..... 2 Inch

Primary Pressure Rating –
Maximum Primary Pressure ..... 300 psig (17.2 bar)

Secondary Pressure Range – ..... 10 to 125 psig (0.7 to 8.6 bar)
10 to 180 psig (0.7 to 12.4 bar)

Temperature Rating ..... 32°F to 150°F (0°C to 66°C)

Weight ..... 10.82 lb. (53 kg)

Materials of Construction

Adjusting Stem & Springs ..... Steel

Body ..... Zinc Alloy, Die Cast

Bonnet, Piston Stem, Valve Poppet & Cap ..... Aluminum

Piston, Cap ..... Plastic

Seals ..... Nitrile

Parker Hannifin Corporation
Pneumatic Division
Richland, Michigan
www.parker.com/pneumatics

10R Pilot Controlled Regulator – Economy

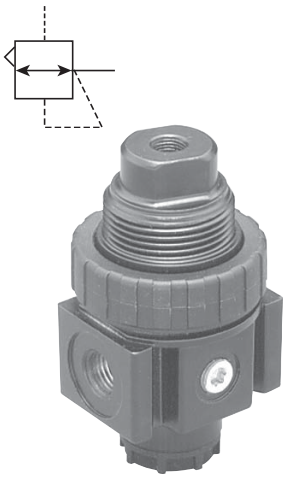

Features

- Unique balanced poppet valve minimizes secondary pressure fluctuations.
- Solid control piston with resilient seat for long, service-free operation.
- Easily serviced.
- High Flow: 1/4" – 50 SCFM§
  3/8" – 50 SCFM§

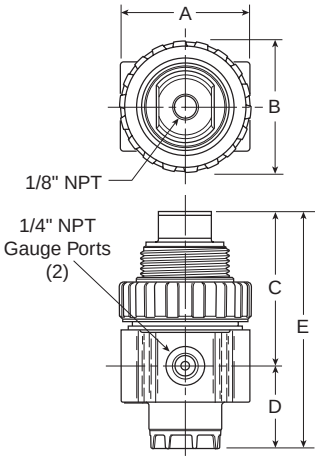

Port Size	NPT
Without Gauge	
1/4"	**10R115P***
3/8"	**10R215P***
With 160 PSI Gauge	
1/4"	**10R121P***
3/8"	**10R221P***

Standard part numbers shown bold. For other models refer to ordering information below.

NOTE: 1.53 Dia. (39mm) hole required for panel mounting.

§ SCFM = Standard cubic feet per minute at 100 psig inlet, 90 psig no flow secondary setting and 10 psig pressure drop.

10R Pilot Regulator Dimensions		
A 2.00 (51)	**B** 2.06 (52)	**C** 2.43 (61)
D 1.28 (32)	**E** 3.71 (93)	

Inches (mm)

⚠ WARNING

Product rupture can cause serious injury.
Do not connect regulator to bottled gas.
Do not exceed maximum primary pressure rating.

Ordering Information

10R	1	15	P	*	—	—

Port Size
1 1/4 Inch
2 3/8 Inch

Relief / Gauge Options
Without Gauge
14 Non-Relieving Piston
15 Relieving Piston
* With Gauge
19 Non-Relieving Piston
21 Relieving Piston

* Includes 1-1/2" Dial Face Gauge 0 to 160 psig

Adjustment
P Pilot Operated

Engineering Level
* Will be Entered at Factory

Port Type
Blank NPT
1 BSPP
2 BSPT

Options
Blank No Options

BOLD ITEMS ARE MOST POPULAR.

Parker Hannifin Corporation
Pneumatic Division
Richland, Michigan
www.parker.com/pneumatics

Technical Information

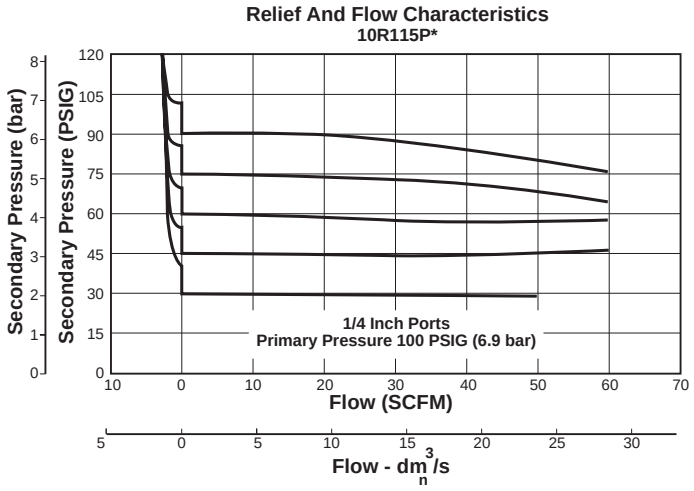

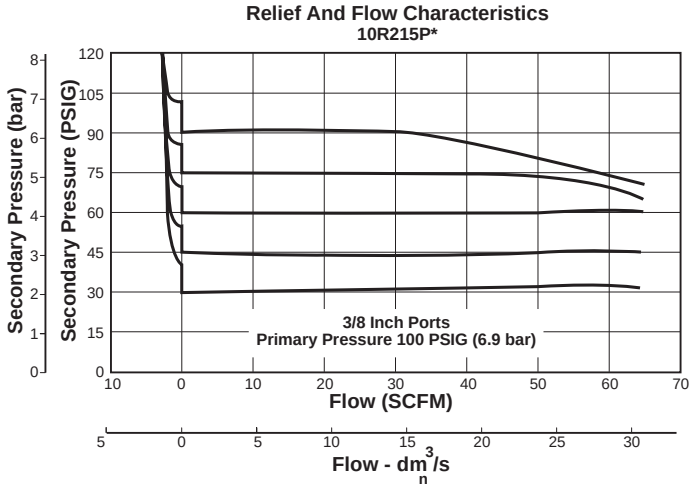

10R Pilot Regulator Kits & Accessories

Gauges – 1-1/2" Dial Face
30 psig (0 to 2.1 bar).....K4515N14030
60 psig (0 to 4.1 bar).....K4515N14060
160 psig (0 to 11.0 bar).....K4515N14160
300 psig (0 to 20.0 bar).....K4515N14300

2" Dial Face
60 psig (0 to 4.1 bar).....K4520N14060
160 psig (0 to 11.0 bar).....K4520N14160
300 psig (0 to 20.0 bar).....K4520N14300

Mounting Bracket Kit.....PS963P

Panel Mount Nut – Metal.....PS964P

Pilot Conversion Kit.....PS945P

Service Kits – Relieving.....PS94900P
Non-Relieving.....PS94700P

Specifications

Gauge Ports (2)..... 1/4 Inch

Port Threads.....1/4, 3/8 Inch

Pressure & Temperature Rating – ..... 0 to 250 psig (0 to 17.2 bar)
32°F to 175°F (0°C to 80°C)

Weight..... 0.90 lb. (0.41 kg)

Materials of Construction

Body..... Zinc

Piston & Poppet..... Plastic

Seals.....Nitrile

Spring – Poppet .....Steel

Parker Hannifin Corporation
Pneumatic Division
Richland, Michigan
www.parker.com/pneumatics

11R Pilot Controlled Regulator – Compact

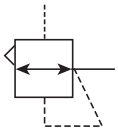

Features

- Balanced poppet provides quick response and accurate pressure regulation.
- Pilot controlled regulators can be mounted “out of reach” with pilot regulator installed in a convenient location.
- Solid control piston for extended life.
- Two full flow 1/4" gauge ports can be used as additional outlets.
- Pilot port 1/4 Inch.
- High Flow: 1/4" – 85 SCFM§
  3/8" – 95 SCFM§
  1/2" – 95 SCFM§

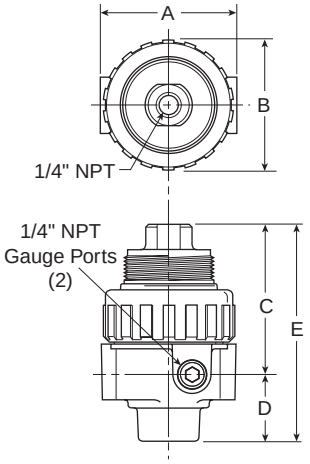

Port Size	NPT
Without Gauge	
1/4"	**11R115P***
3/8"	**11R215P***
1/2"	**11R315P***
With 160 PSI Gauge	
1/4"	**11R121P***
3/8"	**11R221P***
1/2"	**11R321P***

Standard part numbers shown bold. For other models refer to ordering information below.

NOTE: 2.00 Dia. (50,8mm) hole required for panel mounting.

§ SCFM = Standard cubic feet per minute at 100 psig inlet, 90 psig no flow secondary setting and 10 psig pressure drop.

11R Pilot Regulator Dimensions		
A 2.81 (71)	**B** 2.74 (70)	**C** 3.05 (77)
D 1.39 (35)	**E** 4.44 (113)	

Inches (mm)

⚠ WARNING

Product rupture can cause serious injury.
Do not connect regulator to bottled gas.
Do not exceed maximum primary pressure rating.

Ordering Information

11R	2	15	P	*	—

Port Size
- **1 1/4 Inch**
- **2 3/8 Inch**
- **3 1/2 Inch**

Relief / Gauge Options
- Without Gauge
- 14 Non-Relieving Piston
- **15 Relieving Piston**
- * With Gauge
- 19 Non-Relieving Piston
- **21 Relieving Piston**

* Includes 2" Dial Face Gauge 0 to 300 psig

Adjustment
- **P Pilot Operated**

Engineering Level
- * Will be Entered at Factory

Port Type
- **Blank NPT**
- 1 BSPP
- 2 BSPT

BOLD ITEMS ARE MOST POPULAR.

Parker Hannifin Corporation
Pneumatic Division
Richland, Michigan
www.parker.com/pneumatics

Technical Information

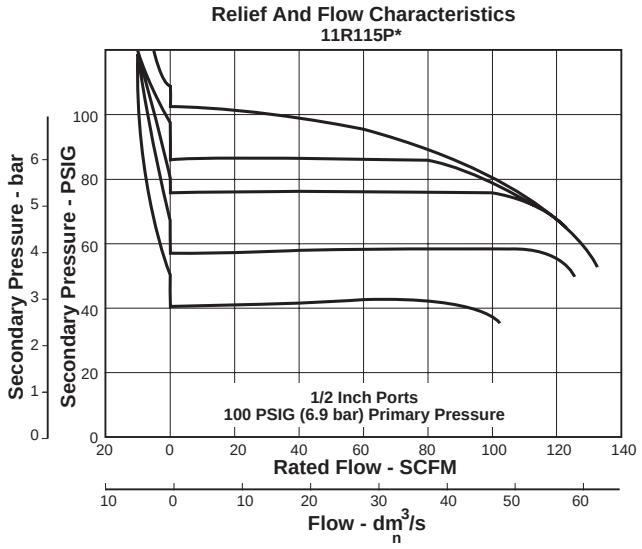

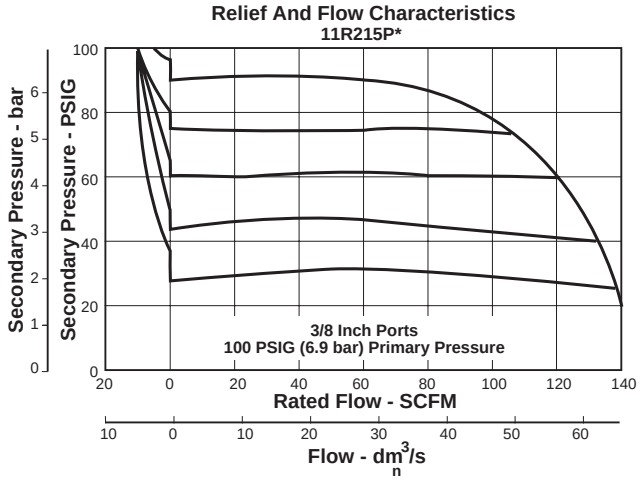

11R Pilot Regulator Kits & Accessories

Body Service Kits – Seat Insert Kit PS713P

Gauges – 60 psig (0 to 4.1 bar)..... K4520N14060
160 psig (0 to 11.0 bar) K4520N14160
300 psig (0 to 20.0 bar) K4520N14300

Mounting Bracket Kit (Includes Panel Mount Nut)..... PS707P

Panel Mount Nut – Plastic P04082
Metal P04079B

Pilot Conversion Kit – Relieving..... PS745P

Service Kits – Non-Relieving..... PS747P
Relieving..... PS749P

Specifications

Gauge Ports (2).....1/4 Inch
(Can be used as additional Full Flow 1/4 Inch Outlet Ports)

Port Threads ..... 1/4, 3/8, 1/2 Inch

Pressure & Temperature Rating –..... 0 to 250 psig (0 to 17.2 bar)
32°F to 175°F (0°C to 80°C)

Weight .....1.3 lb. (0.58 kg.)

Materials of Construction

Body & Pilot Cap..... Zinc

Piston, Valve Poppet, & Collar ..... Plastic

Seals.....Nitrile

Springs .....Steel

Parker Hannifin Corporation
Pneumatic Division
Richland, Michigan
www.parker.com/pneumatics

12R Pilot Controlled Regulator – Standard

Features

- Balanced poppet provides quick response and accurate pressure regulation.
- Pilot controlled regulators can be mounted "out of reach" with pilot regulator installed in a convenient location.
- Solid control piston for extended life.
- Two full flow 1/4" gauge ports can be used as additional outlets.
- Pilot port 1/4 Inch.
- High Flow: 3/8" – 120 SCFM§
  1/2" – 140 SCFM§
  3/4" – 140 SCFM§

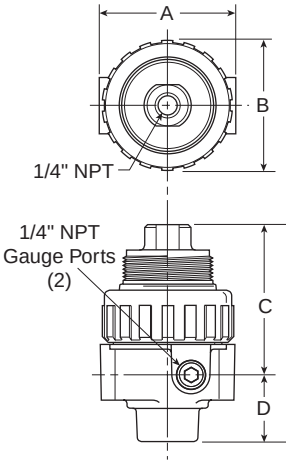

Port Size	NPT
Without Gauge	
3/8"	**12R215P***
1/2"	**12R315P***
3/4"	**12R415P***
With 160 PSI Gauge	
3/8"	**12R221P***
1/2"	**12R321P***
3/4"	**12R421P***

Standard part numbers shown bold. For other models refer to ordering information below.

NOTE: 2.00 Dia. (50,8mm) hole required for panel mounting.

§ SCFM = Standard cubic feet per minute at 100 psig inlet, 90 psig no flow secondary setting and 10 psig pressure drop.

12R Pilot Regulator Dimensions		
A 3.24 (82)	**B** 2.74 (70)	**C** 3.15 (80)
D 1.61 (41)	**E** 4.76 (121)	

Inches (mm)

⚠ WARNING

Product rupture can cause serious injury.
Do not connect regulator to bottled gas.
Do not exceed maximum primary pressure rating.

Ordering Information

12R	2	15	P	*	—

Port Size
- **2 3/8 Inch**
- **3 1/2 Inch**
- **4 3/4 Inch**

Relief / Gauge Options

Without Gauge
- 14 Non-Relieving Piston
- **15 Relieving Piston**

*With Gauge
- 19 Non-Relieving Piston
- **21 Relieving Piston**

* Includes 2" Dial Face Gauge 0 to 300 psig

Adjustment
- **P Pilot Operated**

Engineering Level
- * Will be Entered at Factory

Port Type
- **Blank NPT**
- 1 BSPP
- 2 BSPT

BOLD ITEMS ARE MOST POPULAR.

Parker Hannifin Corporation
Pneumatic Division
Richland, Michigan
www.parker.com/pneumatics

Technical Information

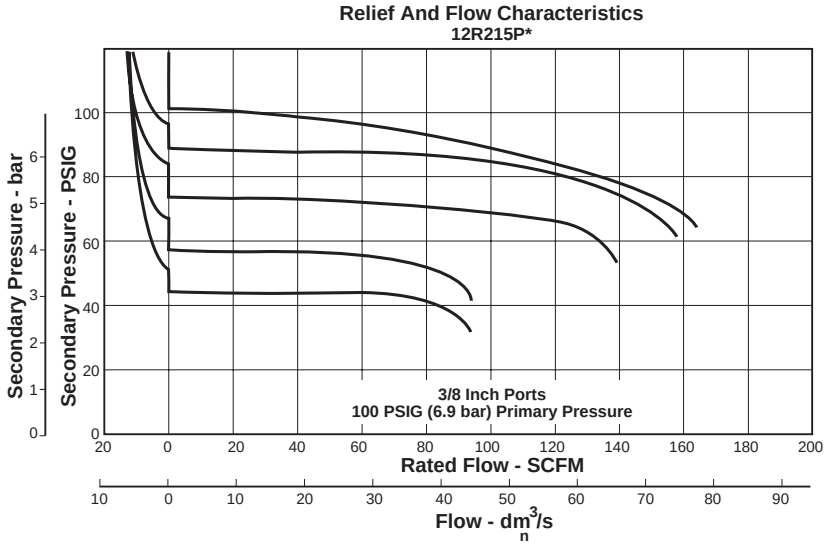

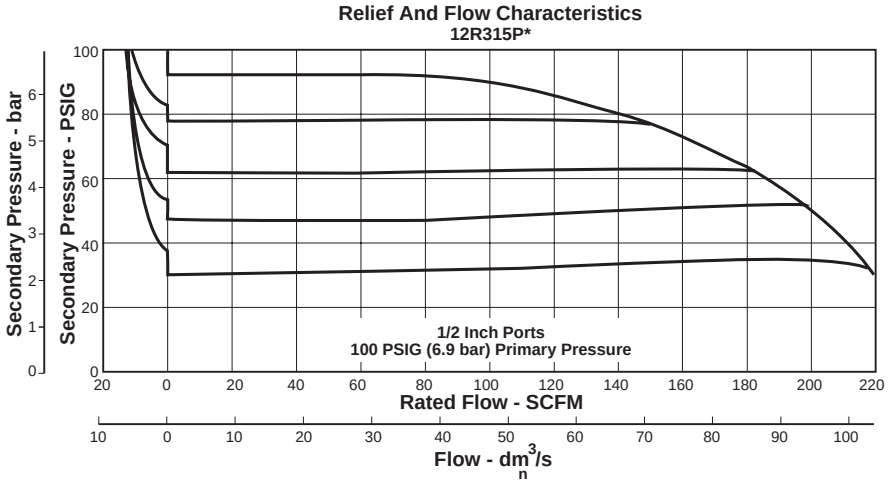

12R Pilot Regulator Kits & Accessories

Body Service Kits – Seat Insert Kit PS813P

Gauges – 60 psig (0 to 4.1 bar) K4520N14060
160 psig (0 to 11.0 bar) K4520N14160
300 psig (0 to 20.0 bar) K4520N14300

Mounting Bracket Kit (Includes Panel Mount Nut) PS807P

Panel Mount Nut – Plastic P04082
Metal P04079B

Pilot Conversion Kit – Relieving PS745P

Service Kits – Non-Relieving PS847P
Relieving PS849P

Specifications

Gauge Ports (2) ..... 1/4 Inch
(Can be used as additional Full Flow 1/4 Inch Outlet Ports)

Port Threads ..... 3/8, 1/2, 3/4 Inch

Pressure & Temperature Rating – ..... 0 to 250 psig (0 to 17.2 bar)
32°F to 175°F (0°C to 80°C)

Weight ..... 2.0 lb. (0.91 kg)

Materials of Construction

Body & Pilot Cap ..... Zinc

Piston, Valve Poppet, & Collar ..... Plastic

Seals ..... Nitrile

Springs ..... Steel

Parker Hannifin Corporation
Pneumatic Division
Richland, Michigan
www.parker.com/pneumatics

P3NR Pilot Controlled Regulator - Hi-Flow

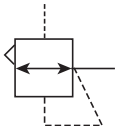

Features

- Port blocks (PB) available to provide 1-1/2" port extension to 1" ported bodies.
- Self relieving feature plus balanced poppet provides quick response and accurate pressure regulation.
- Solid control piston for extended life.
- High Flow: 3/4" – 300 SCFM§
  1" – 300 SCFM§
  1-1/2" – 350 SCFM§

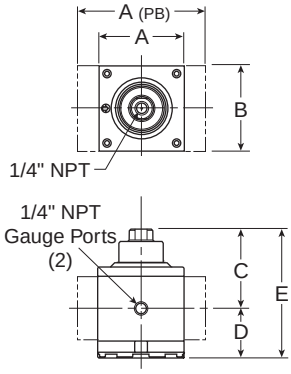

Port Size	NPT
Without Gauge	
3/4"	**P3NRA96BPP**
1"	**P3NRA98BPP**
1-1/2" #	**P3NRA9PBPP**
With 160 PSI Gauge	
3/4"	**P3NRA96BPG**
1"	**P3NRA98BPG**
1-1/2" #	**P3NRA9PBPG**

Standard part numbers shown bold. For other models refer to ordering information below.

1" Port Body with 1-1/2" Port Block.

§ SCFM = Standard cubic feet per minute at 100 psig inlet, 90 psig setting and 10 psig pressure drop.

P3NR Pilot Regulator Dimensions		
A	**A (PB)**	**B**
3.62 (92)	5.91 (150)	3.62 (92)
C	**D**	**E**
3.38 (86)	2.08 (53)	5.46 (139)

Inches (mm)

⚠ WARNING

Product rupture can cause serious injury.
Do not connect regulator to bottled gas.
Do not exceed maximum primary pressure rating.

Ordering Information

P3N	R	A	9	8	B	P	P

Design Level

Port Type
- 1 G Thread (BSPP) Female
- 2 Rc Thread (BSPT) Female
- **9 NPT Female**

Port Size
- **6 3/4" (w/o Port Blocks)**
- **8 1" (w/o Port Blocks)**
- **P 1-1/2" Port Blocks (w/ 1" Ported Body)**

Relief
- **B Relieving**
- N Non-Relieving

Adjustment
- **P Pilot Operated**

Pressure Gauge
- Without Gauge
- **P Pilot Operator**
- With Gauge
- M 60 PSI (0 to 4 bar)
- **G 125 PSI (0 to 8 bar)**
- J 250 PSI (0 to 17 bar)

BOLD ITEMS ARE MOST POPULAR.

Parker Hannifin Corporation
Pneumatic Division
Richland, Michigan
www.parker.com/pneumatics

Technical Information

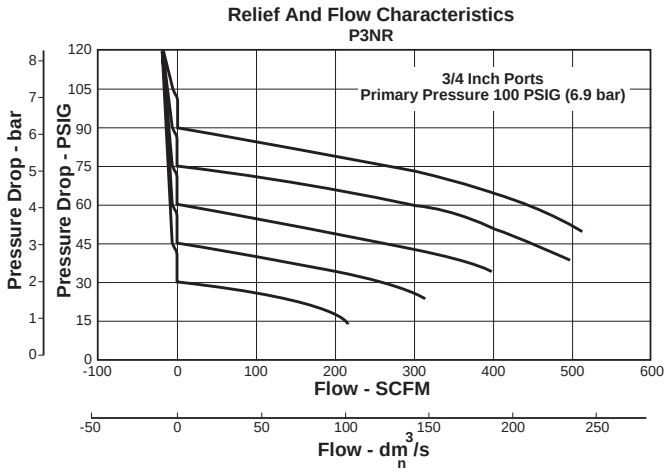

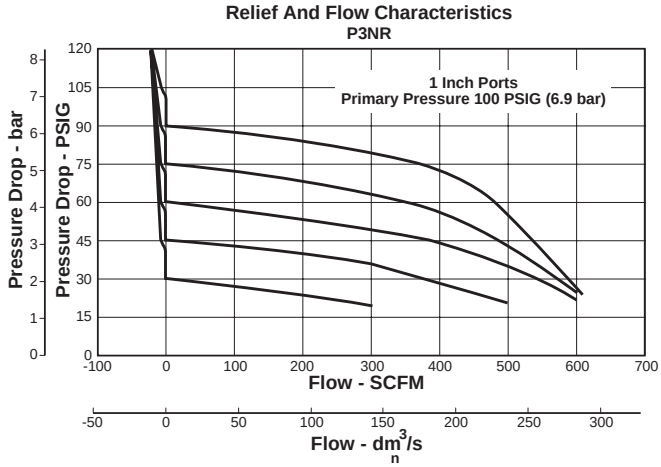

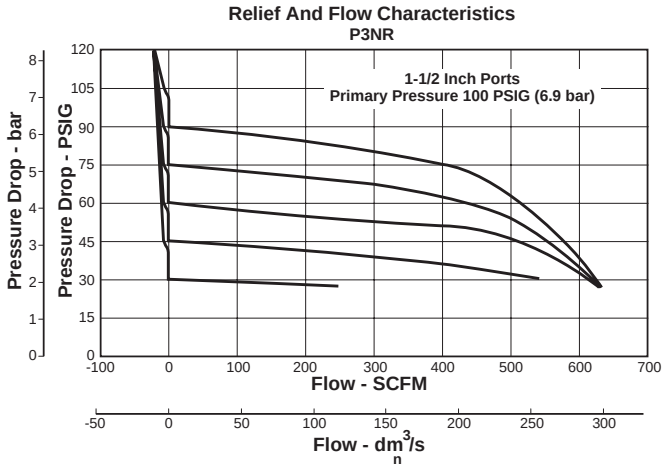

P3NR Pilot Regulator Kits & Accessories

Gauges – 60 psig (0 to 4.1 bar) K4520N14060
160 psig (0 to 11.0 bar) K4520N14160
300 psig (0 to 20.0 bar) K4520N14300

Mounting Bracket Kit* P3NKA00MW

Service Kit – Relieving P3NKA00PD

* If 1-1/2 BSPP E02 fittings are required, use P3NKA0BMW.

Specifications

Gauge Ports (2) ..... 1/4 Inch

Port Threads ..... 3/4, 1, 1-1/2 Inch

Primary Pressure Rating –
Maximum Primary Pressure ..... 250 psig (17.2 bar) Max.

Temperature Rating ..... 32°F to 175°F (0°C to 80°C)

Weight – 3/4" ..... 3.3 lb. (1.5 kg)
1" ..... 3.3 lb. (1.5 kg)
1-1/2" † ..... 4.4 lb. (2.0 kg)

Materials of Construction

Adjusting Stem ..... Steel

Body ..... Aluminum

Bonnet ..... Aluminum

Piston ..... Plastic

Poppet Assembly ..... Brass

Seals ..... Nitrile

Springs – Poppet ..... Steel

† 1" Port Body with 1-1/2" Port Block.

Parker Hannifin Corporation
Pneumatic Division
Richland, Michigan
www.parker.com/pneumatics

R119 Pilot Operated Regulators - Hi-Flow

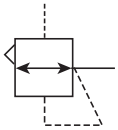

Features

- Adapted for control by a remote or distant small pilot regulator. Ideal for maximum capacity requirements in applications where units are not readily accessible.
- High flow performance featuring rugged design for the most demanding applications.
- Ideal for those installations calling for constant pressure with wide variation in flow.
- Diaphragm operated design with balanced poppet and constant bleed pilot for quick and accurate regulation.
- Secondary aspiration plus balanced poppet provides quick response and accurate pressure regulation.
- Reverse flow version available.
- High Flow: 3/4" & 1" – 300 SCFM§
  1-1/4" & 1-1/2" – 500 SCFM§

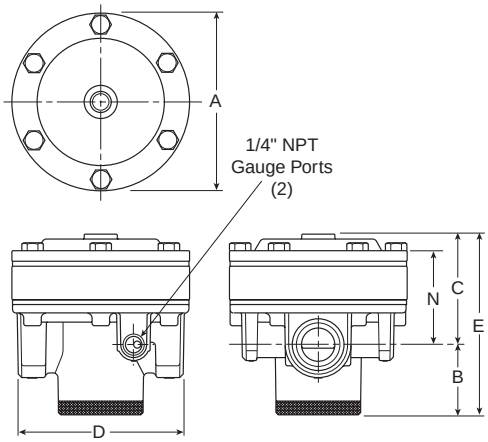

Port Size	NPT
	Relieving
Without Gauge 0-125 psig Reduced Pressure	
3/4"	**R119-06J**
1"	**R119-08J**
1-1/4"	**R119-10J**
1-1/2"	**R119-12J**

Standard part numbers shown bold. For other models refer to ordering information below.

§ SCFM = Standard Cubic Feet Per Minute at 100 psig Inlet, 75 psig No Flow Secondary Setting, and 20 psig Pressure Drop.

R119-06J, R119-08J Pilot Regulator Dimensions					
A	**B**	**C**	**D**	**E**	**N**
4.72 (120)	1.87 (47))	2.94 (75)	4.38 (111)	4.81 (122)	2.47 (63)
R119-10J, R119-12J Pilot Regulator Dimensions					
A	**B**	**C**	**D**	**E**	**N**
4.94 (125)	1.81 (46)	3.32 (84)	4.94 (125)	5.13 (130)	2.88 (73)

inches (mm)

⚠ WARNING

Product rupture can cause serious injury.
Do not connect regulator to bottled gas.
Do not exceed maximum primary pressure rating.

Ordering Information

R	119	—	06	J	—	/**

Port Threads
- **— NPT**
- G BSPP

Port Size
- **06 3/4 Inch**
- **08 1 Inch**
- **10 1-1/4 Inch**
- **12 1-1/2 Inch**

Reduced Pressure Range
- **J Air Pilot Operated**

Options
- **Blank None**
- K Non-Relieving
- X64† Fluorocarbon O-Rings and Diaphragm
- X71 Non-Bleed Pilot (For use with Electronic Controllers)
- X80 Reverse Flow

Engineering Level
- * Will be Entered at Factory

† Brass Bottom Plug Standard with X64 Option.

BOLD ITEMS ARE MOST POPULAR.

Parker Hannifin Corporation
Pneumatic Division
Richland, Michigan
www.parker.com/pneumatics

Technical Information

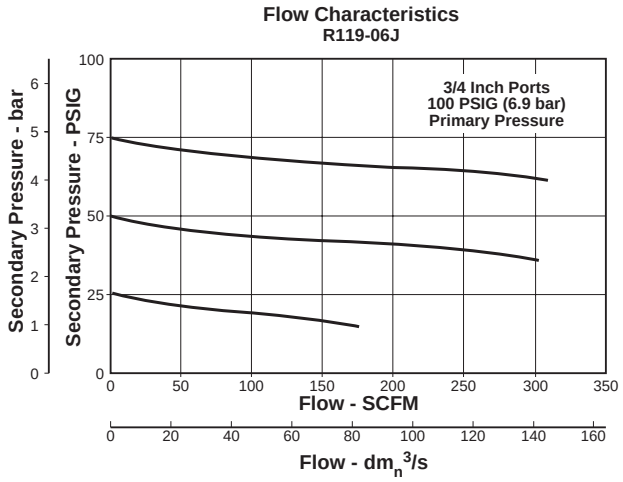

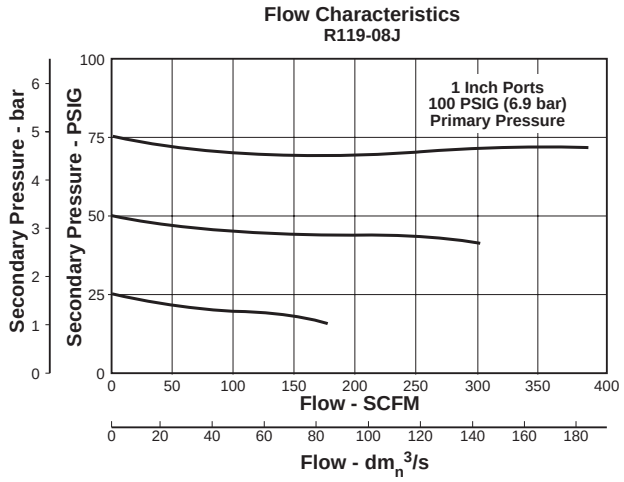

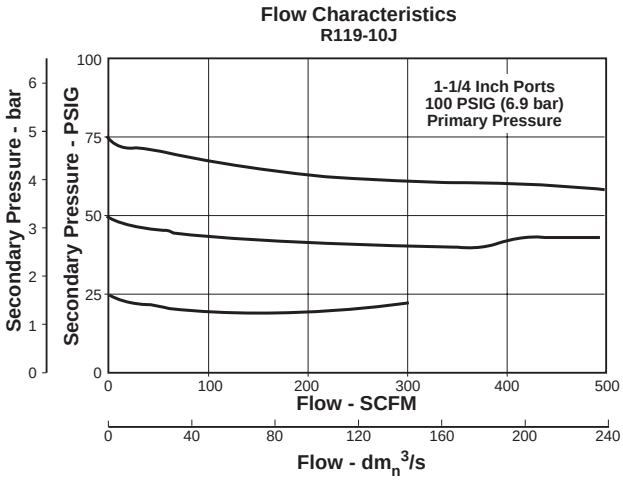

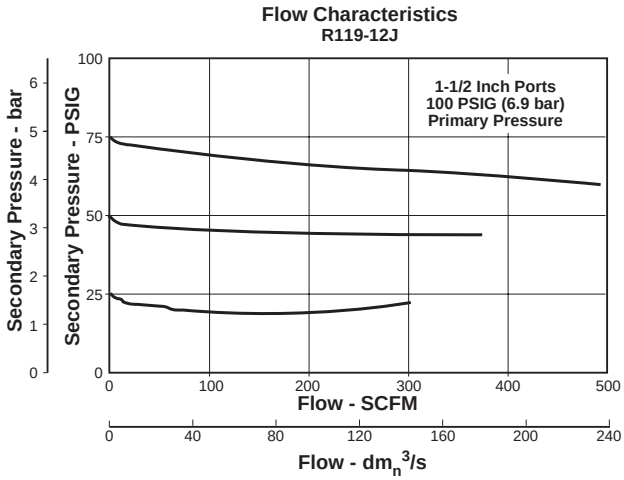

R119 Regulator Kits & Accessories

Gauges –

2" Dial Size, 1/4" Back Connection
0 to 60 psig (0 to 400 kPa) K4520N14060

2" Dial Size, 1/4" Back Connection
0 to 160 psig (0 to 1100 kPa) K4520N14160

2" Dial Size, 1/4" Back Connection
0 to 300 psig (0 to 2068 kPa) K4520N14300

Repair Kits –

Non-Relieving Diaphragm,
Valve Assembly (3/4", 1") RK118X20B

Non-Relieving Diaphragm,
Valve Assembly (1-1/4", 1-1/2") RK118X20D

Relieving Diaphragm,
Valve Assembly (3/4", 1") RK119X20B

Relieving Diaphragm,
Valve Assembly (1-1/4", 1-1/2") RK119X20D

For Fluorocarbon Repair Kits, add X64 to Kit Number suffix.

Specifications

Gauge Ports (2) ..... 1/4 Inch

Port Threads ..... 3/4, 1, 1-1/4, 1-1/2 Inch

Reduced Pressure Range –
Adjustable to Within 5 to 7 psig of Supply Pressure

Supply Pressure ..... 300 psig Maximum (20.4 bar)

Air Consumption –
Constant Bleed from Air Pilot Chamber:
Approximately 0.17 SCFM (10 SCFH)

Temperature Rating ..... 40°F to 125°F (4.4°C to 52°C)

Weight –

R119-06J, R119-08J ..... 5.2 lb. (2.36 kg) / Unit
42 lb. (19.05 kg) / 8-Unit Master Pack

R119-10J, R119-12J ..... 5.6 lb. (2.54 kg) / Unit
46 lb. (20.87 kg) / 8-Unit Master Pack

Materials of Construction

Body, Ring, Top Plate ..... Zinc

Bottom Plug, Innervalve ..... Brass

Seals ..... Buna N

Parker Hannifin Corporation
Pneumatic Division
Richland, Michigan
www.parker.com/pneumatics

R119 Pilot Operated Regulators - Hi-Flow

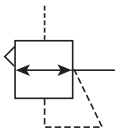

Features

- Adapted for control by a remote or distant small pilot regulator. Ideal for maximum capacity requirements in applications where units are not readily accessible.
- High flow performance featuring rugged design for the most demanding applications.
- Ideal for those installations calling for constant pressure with wide variation in flow.
- Piston operated design with balanced poppet and dual constant bleed for quick and accurate regulation.
- High Flow: 2" & 2-1/2" – 1800 SCFM§

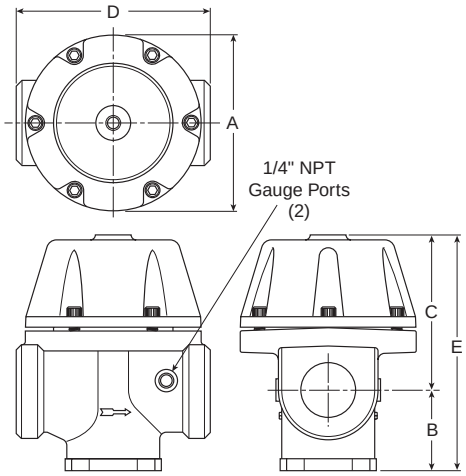

Port Size	NPT
	Relieving
Without Gauge 0-125 psig Reduced Pressure	
2"	**R119-16J**
2-1/2"	**R119-20J**

Standard part numbers shown bold. For other models refer to ordering information below.

§ SCFM = Standard Cubic Feet Per Minute at 100 psig Inlet, 75 psig No Flow Secondary Setting, and 20 psig Pressure Drop.

R119-16J, R119-20J Pilot Regulator Dimensions				
A	**B**	**C**	**D**	**E**
6.63 (168)	3.09 (79)	7.78 (147)	7.31 (185)	10.87 (276)

inches (mm)

⚠ WARNING

Product rupture can cause serious injury.
Do not connect regulator to bottled gas.
Do not exceed maximum primary pressure rating.

Ordering Information

R	119	—	16	J

Port Threads
— NPT
G BSPP

Port Size
16 2 Inch
20 2-1/2 Inch

Reduced Pressure Range
J Air Pilot Operated

NOTE: Non-Relieving Not Available.

BOLD ITEMS ARE MOST POPULAR.

Parker Hannifin Corporation
Pneumatic Division
Richland, Michigan
www.parker.com/pneumatics

Technical Information

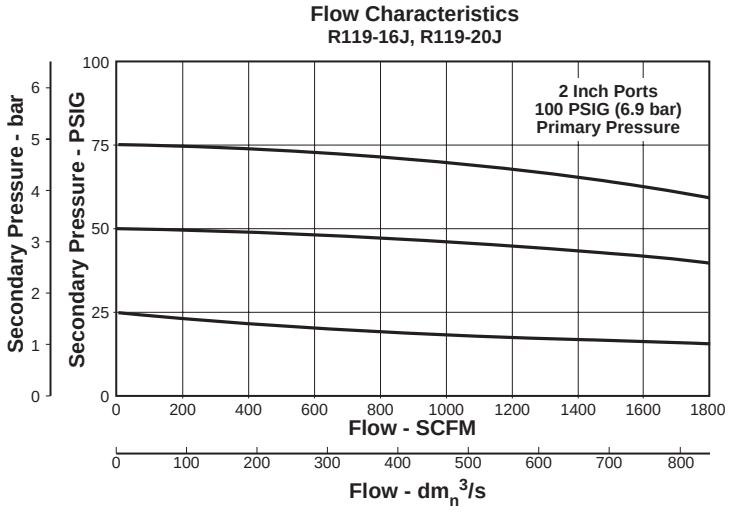

R119 Regulator Kits & Accessories

Gauges –

2" Dial Size, 1/4" Back Connection
0 to 60 psig (0 to 400 kPa) K4520N14060

2" Dial Size, 1/4" Back Connection
0 to 160 psig (0 to 1100 kPa) K4520N14160

2" Dial Size, 1/4" Back Connection
0 to 300 psig (0 to 2068 kPa) K4520N14300

Repair Kits –

Piston Type Regulation (2", 2-1/2") RK119G

Specifications

Gauge Ports (2) ..... 1/4 Inch
(Can be used for Full Flow)
High Pressure Outlet for Pilot (Not seen in photo) ..... 1/4 Inch

Port Threads ..... 2, 2-1/2 Inch

Reduced Pressure Range –
Adjustable to Within 5 to 7 psig of Supply Pressure

Supply Pressure ..... 300 psig Maximum (20.4 bar)

Air Consumption –
Constant Bleed from Air Pilot Chamber:
Approximately 0.17 SCFM (10 SCFH)

Constant Bleed from Reduced Pressure:
Approximately 0.17 SCFM (10 SCFH)

Temperature Rating ..... 40°F to 120°F (4.4°C to 48.9°C)

Weight –
R119-16J, R119-20J ..... 15 lb. (6.80 kg) / Unit
15 lb. (6.80 kg) / 1-Unit Master Pack

Materials of Construction

Body, Piston ..... Aluminum

Seals ..... Buna N

Innervalve ..... Brass & Stainless

Parker Hannifin Corporation
Pneumatic Division
Richland, Michigan
www.parker.com/pneumatics

Filter / Regulators

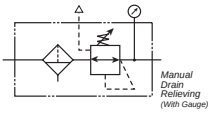

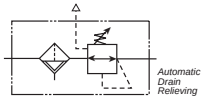

- Pipe Sizes 1/8 thru 1-1/2 Inch
- Flows to 200 SCFM
- Pressures to 250 psig

Integral Filter / Regulators are an excellent choice where accurate pressure regulation and high moisture removal efficiency are required in a space saving package.

- Miniature 14E Series, 1/8 and 1/4 Inch
- Miniature B344 Series, 1/8 and 1/4 Inch
- Economy 05E Series, 1/4 and 3/8 Inch
- Compact 06E Series, 1/4, 3/8 and 1/2 Inch
- Standard 07E Series, 3/8, 1/2 and 3/4 Inch
- Hi-Flow P3NE Series, 3/4, 1 and 1-1/2 Inch
- Standard / Coalescing 12E Series, 3/8, 1/2 and 3/4 Inch

Filter / Regulator Selection

1. Determine maximum system flow requirements.
2. Determine maximum allowable pressure drop at rated flow in SCFM.
3. Refer to flow chart and select filter/regulator by choosing the curve that offers minimum pressure drop at desired flow in SCFM.

Reading Flow Charts to Size Filter / Regulators

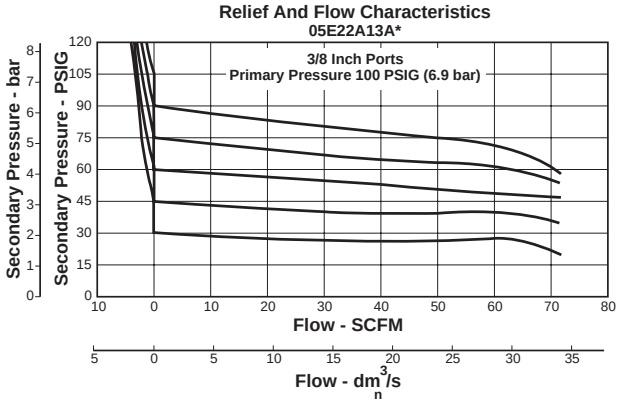

Once the required flow is determined for a pneumatic application the regulator or filter/regulator can be selected by using the flow chart. The chart serves two different purposes. To read the flow, use the right side of the chart. To read the relief characteristics use the left side of the chart. When reading the flow chart, first determine the secondary pressure that will be used. Find the appropriate pressure curve on the graph. Given an acceptable pressure drop for an application, follow the flow curve until it intersects the pressure drop point. This will give the flow at that particular pressure drop.

⚠ WARNING

Product rupture can cause serious injury.
Do not connect regulator to bottled gas.
Do not exceed maximum primary pressure rating.

CAUTION:

REGULATOR PRESSURE ADJUSTMENT – The working range of knob adjustment is designed to permit outlet pressures within their full range. Pressure adjustment beyond this range is also possible because the knob is not a limiting device. This is a common characteristic of most industrial regulators, and limiting devices may be obtained only by special design.

For best performance, regulated pressure should always be set by increasing the pressure up to the desired setting.

Parker Hannifin Corporation
Pneumatic Division
Richland, Michigan
www.parker.com/pneumatics

Filter / Regulator

Turning the knob (**A**) clockwise applies a load to control spring (**B**) which forces the piston/diaphragm (**C**) and valve poppet assembly (**D**) to move downward allowing filtered air to flow through the seat area (**E**) created between the poppet assembly and the seat. “First stage filtration” begins when air pressure supplied to the inlet port is directed through deflector plate (**F**) causing a swirling centrifugal action forcing liquids and coarse particles to the inner bowl wall (**G**) and down below the lower baffle (**H**) to the quiet zone. After liquids and large particles are removed in the first stage of filtration “second stage filtration” occurs as air flows through element (**J**) where smaller particles are filtered out and retained. The air flow now passes through seat area (**E**) to the outlet port of the unit. Pressure in the downstream line is sensed below the piston/diaphragm (**C**) and offsets the load of control spring (**B**). When downstream pressure reaches the set-point, poppet valve assembly (**D**) and piston/ diaphragm (**C**) move upward closing seat area (**E**). Should downstream pressure exceed the desired regulated pressure, the excess pressure will cause the piston/ diaphragm (**C**) to move upward opening vent hole (**K**) venting the excess pressure to atmosphere through the hole in the bonnet (**L**). (This occurs in the standard relieving type regulator only.)

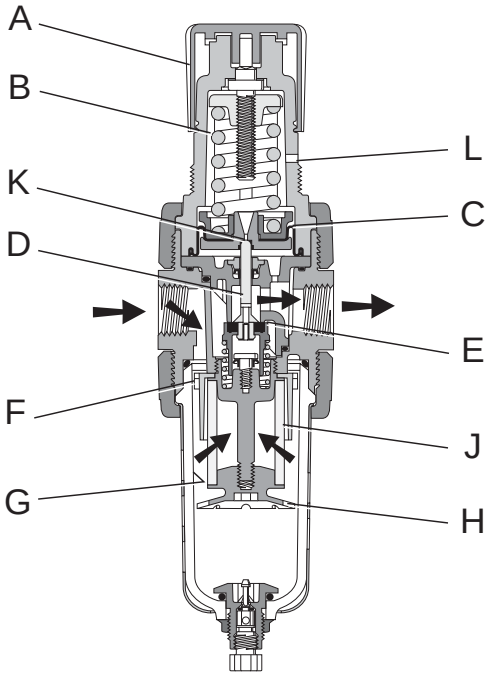

Semi Automatic Drain

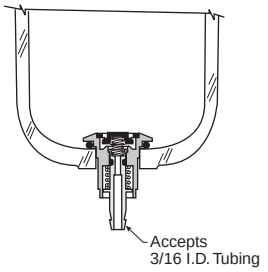

(Overnight Drain)

This drain offers a semi-automatic function when there is a differential pressure in the filter which occurs when system pressure is shut off. The drain can also be used manually by gripping it with your fingertips and pushing upward.

Automatic Pulse Drain

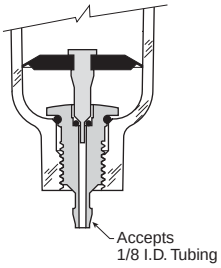

(Spitter Drain)

The diaphragm in this drain pulses when there is a pressure differential such as a valve cycling or cylinder stroking downstream. This action flexes the diaphragm and allows the filter to drain the entrapped water.

Automatic Float Drain

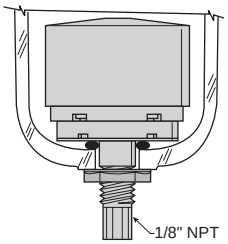

The float internal to this drain rises with increased liquid level. When the float rises, it opens a seat area allowing the trapped liquids to drain through the bottom.
A manual override can be pushed in the bottom of the drain to unseat the float if particulates create a block.

Parker Hannifin Corporation
Pneumatic Division
Richland, Michigan
www.parker.com/pneumatics

14E Filter / Regulator – Miniature

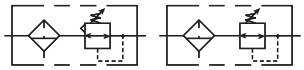

Features

- Excellent water removal efficiency.
- Unbalanced poppet standard.
- Solid control piston for extended life.
- Space saving package offers both filter and regulator features in one integral unit.
- Non-rising adjustment knob.
- Two full flow 1/8" gauge ports.
- High Flow: 1/8" – 16 SCFM§
  1/4" – 18 SCFM§

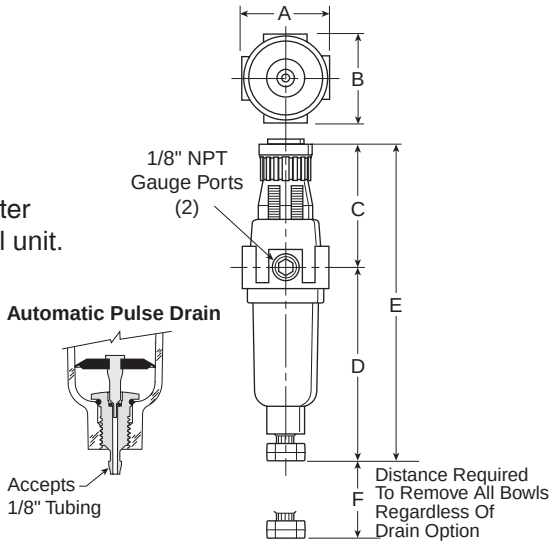

Port Size	NPT	
	Twist Drain	Automatic Pulse Drain
Poly Bowl‡		
1/8"	**14E01B13F***	**14E05B13F***
1/4"	**14E11B13F***	**14E15B13F***
Metal Bowl		
1/8"	**14E03B13F***	**14E07B13F***
1/4"	**14E13B13F***	**14E17B13F***

Standard part numbers shown bold. For other models refer to ordering information below.

‡ For polycarbonate bowl see Caution on page C2.

§ SCFM = Standard cubic feet per minute at 100 psig inlet, 90 psig no flow secondary setting and 10 psig pressure drop.

NOTE: 1.218 Dia. (31mm) hole required for panel mounting.

14E Filter / Regulator Dimensions		
A 1.62 (41)	**B** 1.58 (40)	**C** 2.42 (61)
D 3.79 (96)	**D†** 3.64 (92)	**E** 6.21 (158)
E† 6.06 (154)	**F** 1.60 (41)	

Inches (mm)
† With Auto Drain

Ordering Information

BOLD ITEMS ARE MOST POPULAR.

14E	1	1	B	13	F	*	—	—	---

Port Size

0	**1/8 Inch**
1	**1/4 Inch**

Elements

A	40 Micron
B	**5 Micron**
Z	Adsorber

Relief

F	**Relieving**
G	Non-Relieving
H*	Low Temp Relieving

* Twist Drain Only.

Port Type

Blank	NPT
1	BSPP
2	BSPT

Preset / Pressure Limited

Blank	**None**
XXX*	Preset Pressure
XXX*	Pressure Limited

* Available Preset / Pressure Limited Range, 10 to 90 psig in 5 psig increments. For higher pressures, contact factory.

(Example: 065 = 65 psig)

Bowl Options

Polycarbonate Bowl
- **1 Twist Drain**
- **5 Automatic Pulse Drain**

Metal Bowl
- **3 Twist Drain**
- **7 Automatic Pulse Drain**

Pressure Range

Without Gauge		With Gauge*	
10	30 psig	15	30 psig
11	60 psig	16	60 psig
12	15 psig	17	15 psig
13	**125 psig**	18	125 psig

* Not available with BSPP or BSPT port types.

Engineering Level

* Will be Entered at Factory

Options

Blank	**No Options**
L†	Preset Non-Adjustable
P†	Preset Adjustable
S†	Pressure Limiter Max. Adjustable
T†	Pressure Limiter Max.

† Inlet Pressure is 100 psig. For other pressures, contact factory.

Spring Type by Preset / Limited Pressure:
For Preset / Limited Pressure 10 to 25 use 30 PSI Spring
For Preset / Limited Pressure 26 to 50 use 60 PSI Spring
For Preset / Limited Pressure 51 to 90 use 125 PSI Spring

Parker Hannifin Corporation
Pneumatic Division
Richland, Michigan
www.parker.com/pneumatics

Technical Information

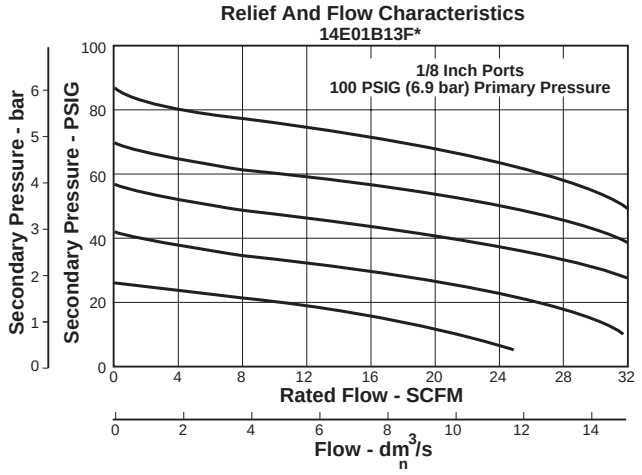

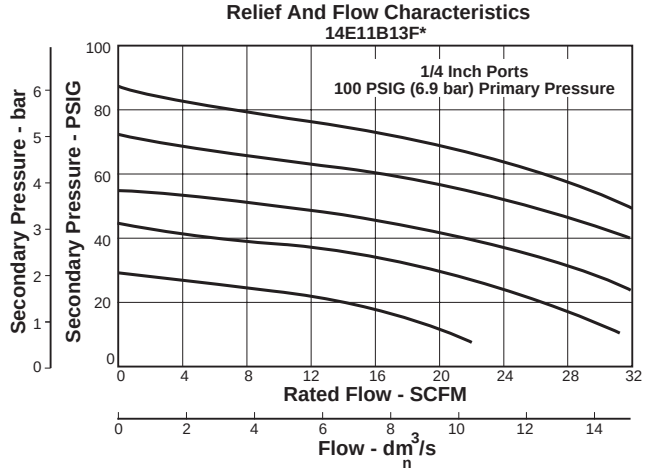

CAUTION:

REGULATOR PRESSURE ADJUSTMENT – The working range of knob adjustment is designed to permit outlet pressures within their full range. Pressure adjustment beyond this range is also possible because the knob is not a limiting device. This is a common characteristic of most industrial regulators, and limiting devices may be obtained only by special design.

For best performance, regulated pressure should always be set by increasing the pressure up to the desired setting.

⚠ WARNING

Product rupture can cause serious injury.
Do not connect regulator to bottled gas.
Do not exceed maximum primary pressure rating.

14E Filter / Regulator Kits & Accessories

Bonnet Tamperproof Kit P01265

Bowl Kits –
Poly Bowl – Automatic Drain PS408BP
Twist Drain PS404P
Metal Bowl – Automatic Drain PS451BP
Twist Drain PS447BP

Filter Element Kits – 40 Micron PS401P
5 Micron PS403P
Adsorber PS452P

Gauges – 30 psig (0 to 2.1 bar) K4515N18030
60 psig (0 to 4.1 bar) K4515N18060
160 psig (0 to 11.0 bar) K4515N18160

Mounting Bracket Kit* (Includes Panel Mount Nut) PS417BP

Panel Mount Nut* P78652

Poppet / Piston Kits – Unbalanced, Non-Relieving PS428P
Unbalanced, Relieving PS426P

Springs – 1- 15 psig Range (Yellow) P01176
1- 30 psig Range (Black) P01175
1- 60 psig Range (White) P01174
2- 125 psig Range (Gold) P01173

Specifications

Automatic Pulse Drain Tube Barb ..... 1/8 Inch

Bowl Capacity ..... 1 Ounce

Gauge Ports (2) (Can be used for Full Flow) ..... 1/8 Inch

Port Threads ..... 1/8, 1/4 Inch

*Tighten panel mount nut 2.8 to 3.4 Nm (25 to 30 in-lbs) of torque.

Pressure & Temperature Ratings –
Polycarbonate Bowl
0 to 150 psig (0 to 10.3 bar), 32°F to 125°F (0°C to 52°C)
Metal Bowl
0 to 250 psig (0 to 17.2 bar), 32°F to 175°F (0°C to 80°C)

Secondary Pressure Ranges –
Standard Pressure ..... 2 to 125 psig (0 to 8.6 bar)
Medium Pressure ..... 1 to 30 psig (0 to 2.1 bar)
Medium Pressure ..... 1 to 60 psig (0 to 4.1 bar)
Low Pressure ..... 1 to 15 psig (0 to 1 bar)

Weight ..... 0.4 lb. (0.18 kg)

Materials of Construction

Adjusting Nut ..... Brass

Adjusting Stem & Spring ..... Steel

Body ..... Zinc

Bonnet, Knob, Seat, Piston, Holder & Deflector ..... Plastic

Bowls Available – Transparent ..... Polycarbonate
Metal (Without Sight Gauge) ..... Zinc

Drains – Manual – Twist Type
Body & Stem ..... Plastic
Seals ..... Nitrile
Automatic – Pulse Type
Piston & Seals ..... Nitrile
Stem, Seat, Adaptor & Washers ..... Aluminum

Filter Elements – 5 Micron (Standard) ..... Plastic
40 Micron (Optional) ..... Plastic
Adsorber (Optional) ..... Activated Charcoal

Seals ..... Nitrile

Parker Hannifin Corporation
Pneumatic Division
Richland, Michigan
www.parker.com/pneumatics

B344 Miniature Filter / Regulator

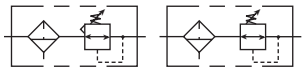

Features

- Excellent Water Removal Efficiency
- Diaphragm Operated for Fast Operation
- Large Diaphragm to Valve Area for Precise Regulation and High Flow capacity
- Balanced Valve Design for Precise Regulation
- Space Saving Package Offers Both Filter and Regulator Features in One Integral Unit
- Non-rising Adjustment Knob
- High Flow: 1/8" – 12 SCFM§
  1/4" – 12 SCFM§

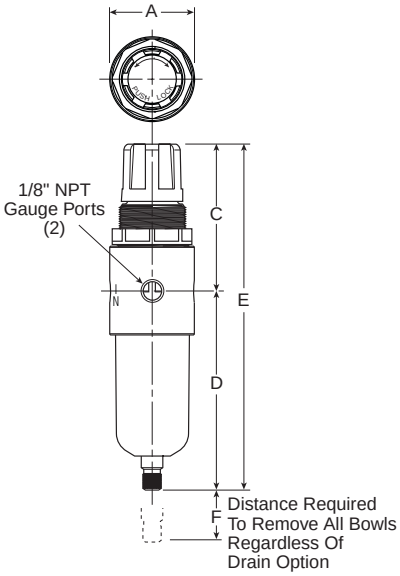

Port Size	NPT
	Manual Twist Drain
Poly Bowl‡	
1/8"	**B344-01AGC**
1/4"	**B344-02AGC**
Metal Bowl without Sight Gauge	
1/8"	**B344-01DGC**
1/4"	**B344-02DGC**

Bold Items are Most Popular.
For other models refer to ordering information below.

NOTE: 1.218 Dia. (31mm) hole required for panel mounting.

‡ For polycarbonate bowl see Caution on page 2.
§ SCFM = Standard cubic feet per minute at 100 PSIG inlet, 75 PSIG no flow secondary setting and 25% pressure drop.

B344 Filter / Regulator Dimensions		
A	**C**	**D**
1.54 (39.2)	2.68 (68.1)	3.63 (92.1)
E	**F**	
6.31 (160.2)	1.65 (41.9)	

Inches (mm)
† With Auto Drain

Ordering Information

B34	4	—	02	A	G	C	

Number of Ports	Port Threads	Port Size	Bowl	Elements	Reduced Pressure Range	Options
2 2 Ports	— **NPT**	**01 1/8 Inch**	**A Polycarbonate Bowl**	G 5 Micron	A 0-25 PSIG	**Blank None**
4 4 Ports	G BSPP	**02 1/4 Inch**	D Metal without Sight Gauge		B 0-60 PSIG	G Gauge
					C 0-125 PSIG	K Non-Relieving
						P Panel Mount (Plastic)
						S Automatic Pulse Drain
						X33* Polyurethane Bowl

* Add .65" to overall length.

BOLD ITEMS ARE MOST POPULAR.

Parker Hannifin Corporation
Pneumatic Division
Richland, Michigan
www.parker.com/pneumatics

Technical Information

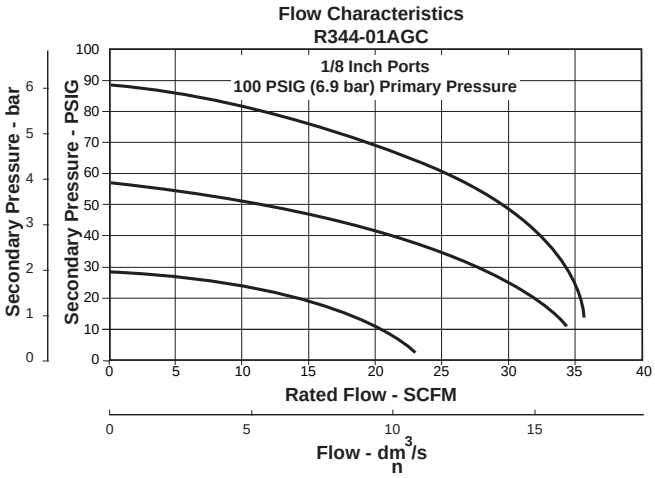

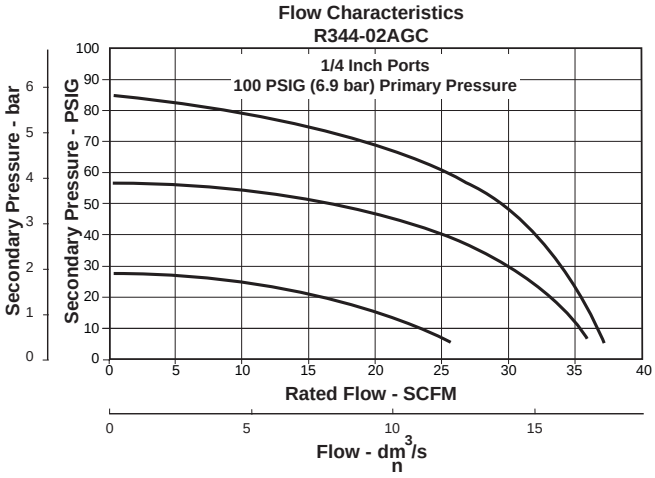

⚠ WARNING

Product rupture can cause serious injury.
Do not connect regulator to bottled gas.
Do not exceed maximum primary pressure rating.

⚠ CAUTION:

REGULATOR PRESSURE ADJUSTMENT – The working range of knob adjustment is designed to permit outlet pressures within their full range. Pressure adjustment beyond this range is also possible because the knob is not a limiting device. This is a common characteristic of most industrial regulators, and limiting devices may be obtained only by special design.
For best performance, regulated pressure should always be set by increasing the pressure up to the desired setting.

B344 Filter / Regulator Kits & Accessories

Adjusting Knob RRP-16-005-000
Bowl Kits –
Zinc (D) BK505Y
Zinc with Automatic Pulse Drain (D) BK505SY
Polycarbonate (A) BK504Y
Polycarbonate with Automatic Pulse Drain (A) BK504SY
Drain Kits –
Automatic Pulse Drain
(Maximum Pressure = 175 PSIG) RK504SY
Filter Element Kits –
5 Micron (All) FRP-96-729
Gauges –
1-1/2" Dial Size, 1/8" Back Connection
0 to 60 PSIG (0 to 400 kPa) K4515N18060
1-1/2" Dial Size, 1/8" Back Connection
0 to 160 PSIG (0 to 1100 kPa) K4515N18160
Mounting Bracket Kit (Includes Plastic Panel Nut) SA161X57
Panel Mount Nut –
Plastic R05X51-P
Aluminum R05X51-A
Repair Kits –
Non-Relieving Diaphragm, Valve Assembly (All) GRP-96-726
Relieving Diaphragm, Valve Assembly (All) GRP-96-725
Springs – 0-25 ..... GRP-95-111
0-60 ..... GRP-96-718
0-125 ..... GRP-96-717

Specifications

Bowl Capacity ..... 1 Ounce
Gauge Ports (2) ..... 1/8 Inch
Maximum Pressure –
Zinc Bowl (D) ..... 0 to 300 PSIG
Polycarbonate Bowl (A) ..... 0 to 150 PSIG
Port Threads ..... 1/8 &1/4 Inch
Reduced Pressure Range –
0 to 25 PSIG ..... (0 to 1.7 bar) (A)
0 to 60 PSIG ..... (0 to 4.1 bar) (B)
2 to 125 PSIG ..... (0.15 to 8.5 bar) (C)
Temperature Rating ..... 40°F to 125°F (4.4°C to 52°C)
Weight –
Zinc Bowl (D) ..... 0.6 lb. (0.27 kg) / Unit
12 lb. (5.44 kg) / 24-Unit Master Pack
Polycarbonate Bowl (A) ..... 0.3 lb. (0.14 kg) / Unit
6 lb. (2.72 kg) / 24-Unit Master Pack

Materials of Construction

Adjusting Knob ..... Acetal
Body ..... Aluminum
Bowls –
Polycarbonate (A) ..... Polycarbonate
Metal (D) ..... Zinc
Zinc with Automatic Pulse Drain
Elastomers ..... Buna N
Filter Element ..... Sintered Polyethylene
Filter Retainer, Vane Plate ..... Acetal
Innervalve, Diaphragm, Button, Drain ..... Brass

Parker Hannifin Corporation
Pneumatic Division
Richland, Michigan
www.parker.com/pneumatics

05E Filter / Regulator – Economy

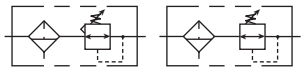

Features

- Space saving package offers both filter and regulator features for optimal performance.
- Excellent water removal efficiency.
- Rolling diaphragm for extended life.
- Removable non-rising knob for tamper resistance.
- Quick response, and accurate pressure regulation regardless of changing flow or inlet pressure.
- 40 micron filter element standard, 5 micron and adsorber available.
- High Flow: 1/4" – 30 SCFM§
  3/8" – 40 SCFM§

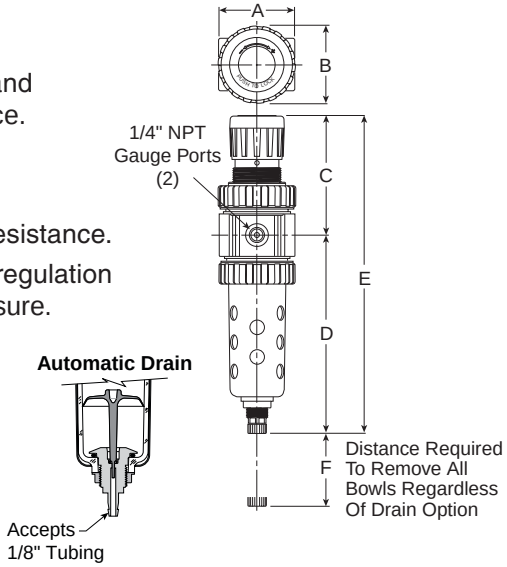

Port Size	NPT	
	Twist Drain	Automatic Pulse Drain
Poly Bowl‡ / Metal Guard		
1/4"	**05E12A13A***	**05E1PA13A***
3/8"	**05E22A13A***	**05E2PA13A***
Metal Bowl / Sight Gauge		
1/4"	**05E14A13A***	**05E1TA13A***
3/8"	**05E24A13A***	**05E2TA13A***

Standard part numbers shown bold. For other models refer to ordering information below.

‡ For polycarbonate bowl see Caution on page C2.

§ SCFM = Standard cubic feet per minute at 100 psig inlet, 90 psig no flow secondary setting and 10 psig pressure drop.

NOTE: 1.53 Dia. (39mm) hole required for panel mounting.

⚠ WARNING

Product rupture can cause serious injury.
Do not connect regulator to bottled gas.
Do not exceed maximum primary pressure rating.

05E Filter / Regulator Dimensions		
A 2.00 (51)	**B** 2.06 (52)	**C** 3.16 (80)
D† 5.35 (136)	**E†** 8.51 (216)	**F** 1.77 (45)

Inches (mm)
† With Twist Drain or Auto Pulse Drain

Ordering Information

05E	1	2	A	13	A	*	—	—	---

Port Size
- **1 1/4 Inch**
- **2 3/8 Inch**

Elements
- **A 40 Micron**
- B 5 Micron
- Z Adsorber

Relief
- **A Relieving**
- L Non-Relieving
- H Low Temp. Relieving

Port Type

Blank	NPT
1*	BSPP
2	BSPT

* 1/4 & 3/8 inch meet ISO 1179-1 Standard.

Preset / Pressure Limited

Blank	None
XXX*	Preset Pressure
XXX*	Pressure Limited

* Available Preset / Pressure Limited Range, 10 to 90 psig in 5 psig increments. For higher pressures, contact factory.

(Example: 065 = 65 psig)

Bowl Options

Polycarbonate Bowl
- 1 Twist Drain
- **2 Metal Bowl Guard / Twist Drain**
- N Automatic Pulse Drain
- **P Metal Bowl Guard / Auto Pulse Drain**

Metal Bowl
- 3 Twist Drain
- **4 Sight Gauge / Twist Drain**
- R Automatic Pulse Drain
- T **Sight Gauge / Auto Pulse Drain**

Pressure Range

Without Gauge		With Gauge*	
10	30 psig	17	30 psig
11	**60 psig**	**16**	**60 psig**
13	**125 psig**	**18**	**125 psig**
14§	200 psig	19§	200 psig

* Includes 1-1/2" Dial Face Gauge
§ Requires Metal Bowl

Spring Type by Preset / Limited Pressure:
For Preset / Limited Pressure 10 to 25 use 30 PSI Spring
For Preset / Limited Pressure 26 to 50 use 60 PSI Spring
For Preset / Limited Pressure 51 to 90 use 125 PSI Spring

Engineering Level
- * Will be Entered at Factory

Options

Blank	No Options
L†	Preset Non-Adjustable
P†	Preset Adjustable
S†	Pressure Limiter Max. Adjustable
T†	Pressure Limiter Max. Non-Adj.

† Inlet Pressure is 100 psig. For other pressures, contact factory.

BOLD ITEMS ARE MOST POPULAR.

Parker Hannifin Corporation
Pneumatic Division
Richland, Michigan
www.parker.com/pneumatics

Technical Information

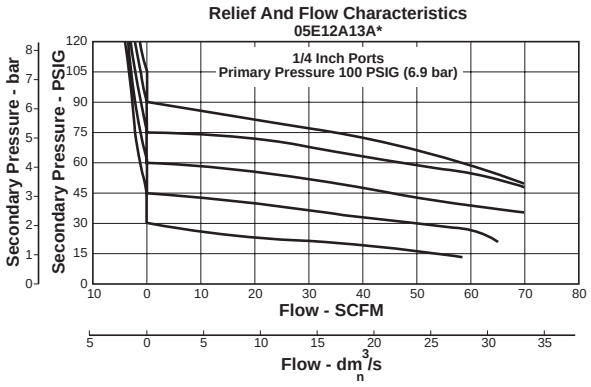

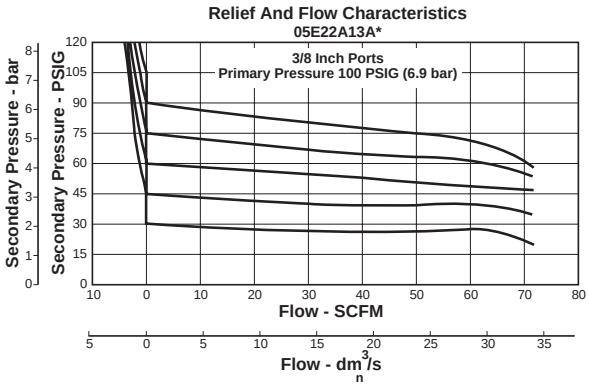

CAUTION:

REGULATOR PRESSURE ADJUSTMENT – The working range of knob adjustment is designed to permit outlet pressures within their full range. Pressure adjustment beyond this range is also possible because the knob is not a limiting device. This is a common characteristic of most industrial regulators, and limiting devices may be obtained only by special design.

For best performance, regulated pressure should always be set by increasing the pressure up to the desired setting.

05E Filter / Regulator Kits & Accessories

Bowl Guard Kit PS905P

Bowl Kits –
- Poly Bowl – Automatic Pulse Drain PS995P
  - Twist Drain PS932P
- Metal Bowl – Automatic Pulse Drain PS997P
  - Twist Drain PS934P
  - Sight Gauge / Automatic Pulse Drain PS996P
  - Sight Gauge / Twist Drain PS935P

Drain Kit –
- Automatic Pulse Drain PS998P
- Semi-Auto Drain PS511P
- Twist Drain PS512P
- Push 'N' Drain PS513P

Filter Element Kits – 40 Micron PS901P
- 5 Micron PS902P
- Adsorber PS931P

Sight Gauge Kit PS914P

Gauges – 1-1/2" Dial Face
- 30 psig (0 to 2.1 bar) K4515N14030
- 60 psig (0 to 4.1 bar) K4515N14060
- 160 psig (0 to 11.0 bar) K4515N14160
- 300 psig (0 to 20.0 bar) K4515N14300

2" Dial Face
- 60 psig (0 to 4.1 bar) K4520N14060
- 160 psig (0 to 11.0 bar) K4520N14160
- 300 psig (0 to 20.0 bar) K4520N14300

Mounting Bracket Kit (Includes Panel Mount Nut) PS963P

Panel Mount Nut – Metal PS964P

Springs – 1-30 psig Range P04427
- 1-60 psig Range P04426
- 2-125 psig Range P04425
- 2-200 psig P02934

Relieving Service Kit PS908P

Non-Relieving Service Kit PS909P

Bonnet Assembly Kit PS915P

Specifications

Bowl Capacity ..... 2.0 Ounces

Gauge Port (2) ..... 1/4 Inch

Sump Capacity ..... 0.9 Ounce

Port Threads ..... 1/4, 3/8 Inch

Pressure & Temperature Rating –
- Polycarbonate Bowl – 0 to 150 psig (0 to 10.3 bar) 32°F to 125°F (0°C to 52°C)
- Metal Bowl – 0 to 250 psig (0 to 17.2 bar) 32°F to 175°F (0°C to 80°C)
- Automatic Pulse Drain – 10 to 150 psig (0.7 to 10.3 bar)

Weight ..... 1.35 lb. (0.6 kg)

Materials of Construction

Adjusting Stem ..... Steel

Body ..... Zinc

Bonnet, Internal Parts ..... Plastic

Bowl Guard ..... Steel

Collar ..... Plastic

Diaphragm ..... Nitrile

Drain ..... Plastic

Filter Elements – 40 Micron (Standard) ..... Plastic
- 5 Micron (Optional) ..... Plastic
- Adsorber (Optional) ..... Activated Charcoal

Knob ..... Plastic

Seals ..... Nitrile

Sight Gauge ..... Polyamide (Nylon)

Springs – Poppet & Control ..... Steel

Parker Hannifin Corporation
Pneumatic Division
Richland, Michigan
www.parker.com/pneumatics

06E Filter / Regulator – Compact

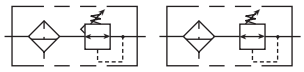

Features

- Space saving package offers both filter and regulator features for optimal performance.
- Excellent water removal efficiency.
- Rolling diaphragm for extended life.
- Quick response, and accurate pressure regulation regardless of changing flow or inlet pressure.
- Two high flow 1/4" gauge ports can be used as additional outlets.
- Shown with recommended metal bowl guard.
- High Flow: 1/4" – 46 SCFM§
  3/8" – 55 SCFM§
  1/2" – 61 SCFM§

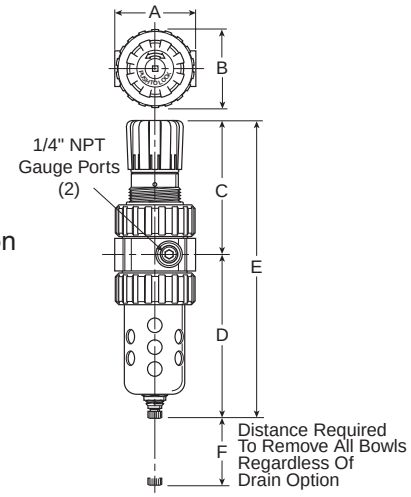

Port Size	NPT	
	Twist Drain	Automatic Float Drain
Poly Bowl‡ / Metal Guard		
1/4"	**06E12A13A***	**06E16A13A***
3/8"	**06E22A13A***	**06E26A13A***
1/2"	**06E32A13A***	**06E36A13A***
Metal Bowl / Sight Gauge		
1/4"	**06E14A13A***	**06E18A13A***
3/8"	**06E24A13A***	**06E28A13A***
1/2"	**06E34A13A***	**06E38A13A***

Standard part numbers shown bold. For other models refer to ordering information below.
‡ For polycarbonate bowl see Caution on page C2.
§ SCFM = Standard cubic feet per minute at 100 psig inlet, 90 psig no flow secondary setting and 10 psig pressure drop.
NOTE: 2.00 Dia. (50.8 mm) hole required for panel mounting. Max. panel thickness 1/4".

06E Filter / Regulator Dimensions			
A	**B**	**C**	**D**
2.81 (71)	2.74 (70)	4.69 (119)	5.69 (145)
D†	**E**	**E†**	**F**
5.74 (146)	10.38 (264)	10.43 (265)	2.25 (57)

Inches (mm)
† With Twist Drain or Auto Pulse Drain

⚠ WARNING

Product rupture can cause serious injury.
Do not connect regulator to bottled gas.
Do not exceed maximum primary pressure rating.

Ordering Information

06E	1	2	A	13	A	*	—	—	---

Port Size
- **1 1/4 Inch**
- **2 3/8 Inch**
- **3 1/2 Inch**

Elements
- **A 40 Micron**
- B 5 Micron
- Z Adsorber

Relief
- **A Relieving**
- L Non-Relieving

Port Type
- **Blank NPT**
- 1* BSPP
- 2 BSPT

* 1/4 & 3/8 inch meet ISO 1179-1 Standard.

Preset
- **Blank None**
- XXX* Preset Pressure

* Available Preset Range, 10 to 90 psig in 5 psig increments. For higher pressures, contact factory.
(Example: 065 = 65 psig)

Bowl Options

Polycarbonate Bowl	Metal Bowl
1 Twist Drain	3 Twist Drain
2 Metal Bowl Guard / Twist Drain	**4 Sight Gauge / Twist Drain**
5 Auto Float Drain	7 Auto Float Drain
6 Metal Bowl Guard / Auto Float Drain	**8 Sight Gauge / Auto Float Drain**

Pressure Range

Without Gauge	With Gauge
11 60 psig	**16 60 psig**
13 125 psig	**18 125 psig**
15§ 250 psig	21§ 250 psig

§ If 250 psig spring range is used, use metal bowl.

Engineering Level
- * Will be Entered at Factory

Options
- **Blank No Options**
- L† Preset Non-Adjustable
- P† Preset Adjustable

† Inlet Pressure is 100 psig. For other pressures, contact factory.

Spring Type by Preset / Limited Pressure:
For Preset / Limited Pressure 10 to 25 use 30 PSI Spring
For Preset / Limited Pressure 26 to 50 use 60 PSI Spring
For Preset / Limited Pressure 51 to 90 use 125 PSI Spring

BOLD ITEMS ARE MOST POPULAR.

Parker Hannifin Corporation
Pneumatic Division
Richland, Michigan
www.parker.com/pneumatics

Technical Information

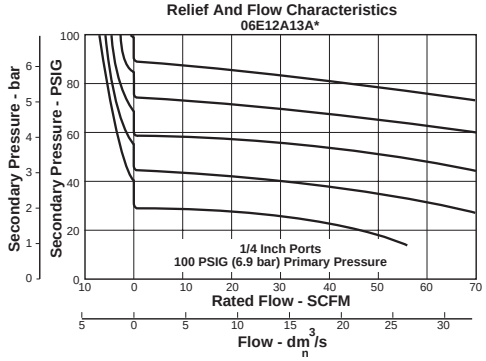

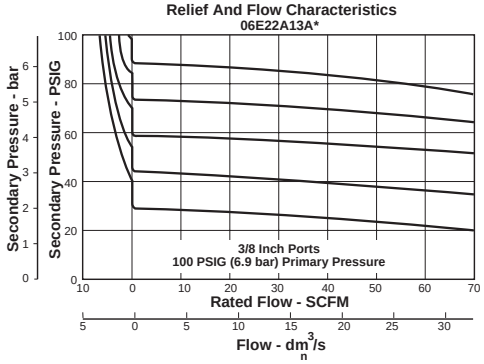

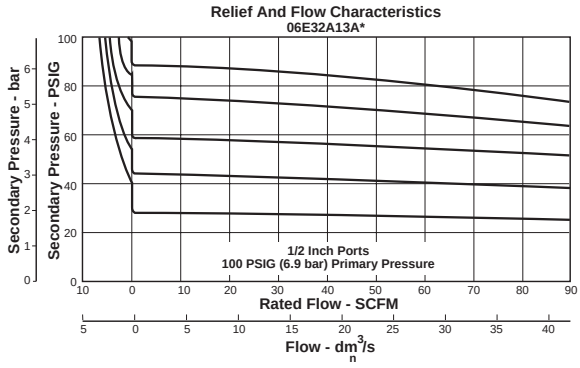

CAUTION:

REGULATOR PRESSURE ADJUSTMENT – The working range of knob adjustment is designed to permit outlet pressures within their full range. Pressure adjustment beyond this range is also possible because the knob is not a limiting device. This is a common characteristic of most industrial regulators, and limiting devices may be obtained only by special design.

For best performance, regulated pressure should always be set by increasing the pressure up to the desired setting.

06E Filter / Regulator Kits & Accessories

Bonnet Assembly Kit PS715P
Bowl Guard Kit PS705P
Bowl Kits –
Poly Bowl – Automatic Float Drain PS722P
Twist Drain PS732P
Metal Bowl – Automatic Float Drain PS726P
Semi-Auto Drain PS794P
Twist Drain PS734P
Sight Gauge / Automatic Drain PS723P
Sight Gauge / Twist Drain PS735P
Control Knob P04069B
Drain Kits – Automatic Float Drain PS506P
Semi-Auto Drain PS511P
Twist Drain PS512P
Push 'N' Drain PS513P
Filter Element Kits – 40 Micron PS701P
5 Micron PS702P
Adsorber PS731P
Gauges – 60 psig (0 to 4.1 bar) K4520N14060
160 psig (0 to 11.0 bar) K4520N14160
300 psig (0 to 20.0 bar) K4520N14300
Mounting Bracket Kit (Includes Panel Mount Nut) PS707P
Panel Mount Nut P04082
Service Kits – Non-Relieving (Includes Poppet) PS711P
Relieving (Includes Poppet) PS710P
Seat Insert Kit PS713P
Springs – 1- 30 psig Range P01698
1- 60 psig Range P04062
2- 125 psig Range P04063
5- 250 psig Range P04064
Tamperproof Kit (Key Lock) PS737P

Specifications

Bowl Capacity ..... 4.4 Ounces
Gauge Ports (2) ..... 1/4 Inch
(Can be used as Additional Full Flow 1/4" Outlet Ports)
Port Threads ..... 1/4, 3/8, 1/2 Inch

Pressure & Temperature Ratings –
Polycarbonate Bowl – 0 to 150 psig (0 to 10.4 bar)
32°F to 125°F (0°C to 52°C)
Metal Bowl – 0 to 250 psig (0 to 17.2 bar)
32°F to 175°F (0°C to 80°C)
Automatic Float Drain – 15 to 250 psig (1.0 to 17.2 bar)
Secondary Pressure Ranges –
Standard Pressure ..... 2 to 125 psig (0 to 8.6 bar)
Low Pressure ..... 1 to 60 psig (0 to 4.1 bar)
High Pressure ..... 5 to 250 psig (0.4 to 17.2 bar)
Sump Capacity ..... 1.75 Ounces
Weight ..... 1.6 lb. (0.7 kg)

Materials of Construction

Adjusting Stem ..... Steel
Body ..... Zinc
Bonnet, Internal Parts ..... Plastic
Bowls Available – Transparent ..... Polycarbonate
Metal (With or Without Sight Gauge) ..... Zinc
Bowl Guard ..... Steel
Collar ..... Plastic
Diaphragm ..... Nitrile
Drains – Manual Twist Drain Standard
Body & Nut ..... Plastic
Manual Push 'N' Drain Optional
Body ..... Nitrile
Stem ..... Brass
Automatic Float Drain Optional
(Interchangeable for Field Conversions)
Operating Range ..... 10 to 250 psig (.7 to 17.2 bar)
Housing, Float ..... Plastic
Seals ..... Nitrile
Springs, Push Rod ..... Stainless Steel
Knob ..... Plastic
Filter Elements – 40 Micron (Standard) ..... Plastic
5 Micron (Optional) ..... Plastic
Adsorber (Optional) ..... Activated Charcoal
Seals ..... Nitrile
Sight Gauge ..... Polyamide
Springs – Poppet ..... Stainless
Control ..... Steel

Parker Hannifin Corporation
Pneumatic Division
Richland, Michigan
www.parker.com/pneumatics

07E Filter / Regulator – Standard

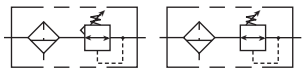

Features

- Space saving package offers both filter and regulator features for optimal performance.
- Excellent water removal efficiency.
- Rolling diaphragm for extended life.
- Quick response, and accurate pressure regulation regardless of changing flow or inlet pressure.
- Two high flow 1/4" gauge ports can be used as additional outlets.
- Shown with recommended metal bowl guard.
- High Flow: 3/8" – 70 SCFM§
  1/2" – 90 SCFM§
  3/4" – 90 SCFM§

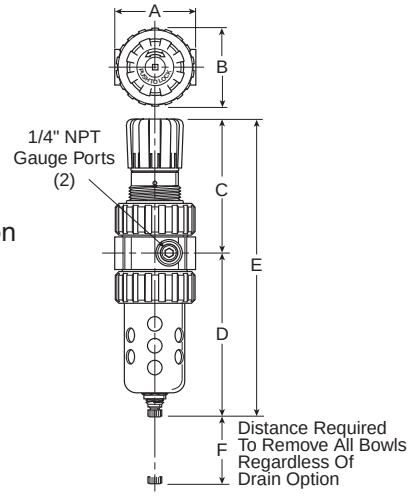

Port Size	NPT	
	Twist Drain	Automatic Float Drain
Poly Bowl‡ / Metal Guard		
3/8"	**07E22A13A***	**07E26A13A***
1/2"	**07E32A13A***	**07E36A13A***
3/4"	**07E42A13A***	**07E46A13A***
Metal Bowl / Sight Gauge		
3/8"	**07E24A13A***	**07E28A13A***
1/2"	**07E34A13A***	**07E38A13A***
3/4"	**07E44A13A***	**07E48A13A***

Standard part numbers shown bold. For other models refer to ordering information below.

‡ For polycarbonate bowl see Caution on page C2.

§ SCFM = Standard cubic feet per minute at 100 psig inlet, 90 psig no flow secondary setting and 10 psig pressure drop.

NOTE: 2.00 Dia. (50.8 mm) hole required for panel mounting. Max. panel thickness 1/4".

07E Filter / Regulator Dimensions			
A	**B**	**C**	**D**
3.24 (82)	3.25 (83)	4.79 (122)	6.97 (177)
D†	**E**	**E†**	**F**
7.00 (178)	11.76 (299)	11.79 (299)	2.75 (70)

Inches (mm)
† With Auto Float Drain

⚠ WARNING

Product rupture can cause serious injury.
Do not connect regulator to bottled gas.
Do not exceed maximum primary pressure rating.

Ordering Information

07E	3	2	A	13	A	*	—	—	---

Port Size
- **2 3/8 Inch**
- **3 1/2 Inch**
- **4 3/4 Inch**

Elements
- **A 40 Micron**
- B 5 Micron
- Z Adsorber

Relief
- **A Relieving**
- L Non-Relieving

Port Type
- **Blank NPT**
- 1* BSPP
- 2 BSPT

* 3/8, 1/2 & 3/4 inch meet ISO 1179-1 Standard.

Preset
- **Blank None**
- XXX* Preset Pressure

* Available Preset Range, 10 to 90 psig in 5 psig increments. For higher pressures, contact factory.

(Example: 065 = 65 psig)

Bowl Options

Polycarbonate Bowl	Metal Bowl
1 Twist Drain	3 Twist Drain
2 Metal Bowl Guard / Twist Drain	**4 Sight Gauge / Twist Drain**
5 Auto Float Drain	7 Auto Float Drain
6 Metal Bowl Guard / Auto Float Drain	**8 Sight Gauge / Auto Float Drain**

Pressure Range

Without Gauge		With Gauge	
11	**60 psig**	**16**	**60 psig**
13	**125 psig**	**18**	**125 psig**
15§	250 psig	21§	250 psig

§ If 250 psig spring range is used, use metal bowl.

Engineering Level
- * Will be Entered at Factory

Options
- **Blank No Options**
- L† Preset Non-Adjustable
- P† Preset Adjustable

† Inlet Pressure is 100 psig. For other pressures, contact factory.

Spring Type by Preset / Limited Pressure:
For Preset / Limited Pressure 10 to 25 use 30 PSI Spring
For Preset / Limited Pressure 26 to 50 use 60 PSI Spring
For Preset / Limited Pressure 51 to 90 use 125 PSI Spring

BOLD ITEMS ARE MOST POPULAR.

Parker Hannifin Corporation
Pneumatic Division
Richland, Michigan
www.parker.com/pneumatics

Technical Information

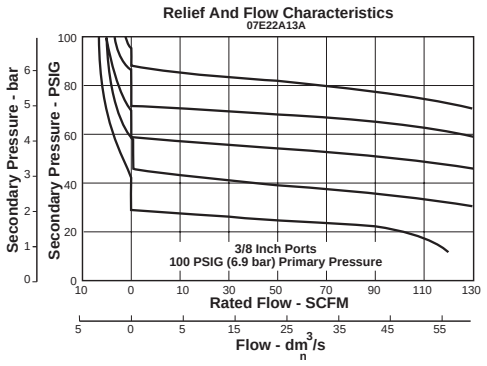

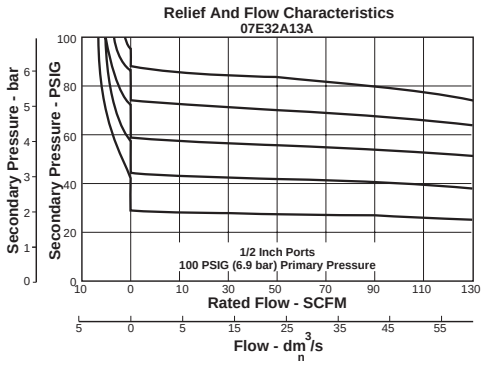

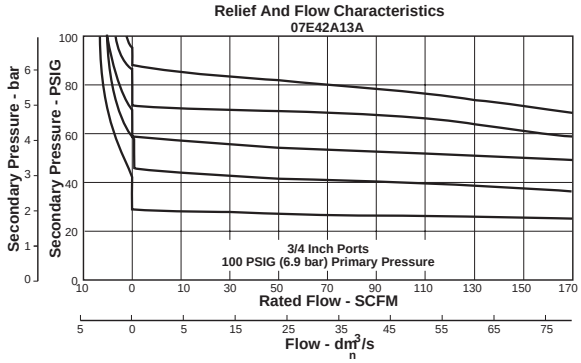

CAUTION:

REGULATOR PRESSURE ADJUSTMENT – The working range of knob adjustment is designed to permit outlet pressures within their full range. Pressure adjustment beyond this range is also possible because the knob is not a limiting device. This is a common characteristic of most industrial regulators, and limiting devices may be obtained only by special design.

For best performance, regulated pressure should always be set by increasing the pressure up to the desired setting.

07E Filter / Regulator Kits & Accessories

Bonnet Assembly Kit PS715P
Bowl Guard Kit PS805P
Bowl Kits –
Poly Bowl – Automatic Float Drain PS822P
Twist Drain PS832P
Metal Bowl – Automatic Float Drain PS826P
Semi-Auto Drain PS894P
Twist Drain PS834P
Sight Gauge / Automatic Drain PS823P
Sight Gauge / Twist Drain PS835P
Control Knob P04069B
Drain Kits – Automatic Float Drain PS506P
Semi-Auto Drain PS511P
Twist Drain PS512P
Push 'N' Drain PS513P
Filter Element Kits – 40 Micron PS801P
5 Micron PS802P
Adsorber PS831P
Gauges – 60 psig (0 to 4.1 bar) K4520N14060
160 psig (0 to 11.0 bar) K4520N14160
300 psig (0 to 20.0 bar) K4520N14300
Mounting Bracket Kit (Includes Panel Mount Nut) PS807P
Panel Mount Nut P04082
Service Kits – Non-Relieving (Includes Poppet) PS811P
Relieving (Includes Poppet) PS810P
Seat Insert Kit PS813P
Springs – 1- 30 psig Range P01698
1- 60 psig Range P04062
2- 125 psig Range P04063
5- 250 psig Range P04064
Tamperproof Kit (Key Lock) PS737P

Specifications

Bowl Capacity ..... 7.2 Ounces
Gauge Ports (2) ..... 1/4 Inch
(Can be used as Additional Full Flow 1/4" Outlet Ports)
Port Threads ..... 3/8, 1/2, 3/4 Inch

Pressure & Temperature Ratings –
Polycarbonate Bowl – 0 to 150 psig (0 to 10.4 bar)
32°F to 125°F (0°C to 52°C)
Metal Bowl – 0 to 250 psig (0 to 17.2 bar)
32°F to 175°F (0°C to 80°C)
Automatic Float Drain – 15 to 250 psig (1.0 to 17.2 bar)
Secondary Pressure Ranges –
Standard Pressure ..... 2 to 125 psig (0 to 8.6 bar)
Low Pressure ..... 1 to 60 psig (0 to 4.1 bar)
High Pressure ..... 5 to 250 psig (0.4 to 17.2 bar)
Sump Capacity ..... 2.8 Ounces
Weight ..... 2.5 lb. (1.1 kg)

Materials of Construction

Adjusting Stem ..... Steel
Body ..... Zinc
Bonnet, Internal Parts ..... Plastic
Bowls Available – Transparent ..... Polycarbonate
Metal (With or Without Sight Gauge) ..... Zinc
Bowl Guard ..... Steel
Collar ..... Plastic or Metal
Diaphragm ..... Nitrile
Drains – Manual Twist Drain Standard
Body & Nut ..... Plastic
Manual Push 'N' Drain Optional
Body ..... Nitrile
Stem ..... Brass
Automatic Float Drain Optional
(Interchangeable for Field Conversions)
Operating Range ..... 10 to 250 psig (.7 to 17.2 bar)
Housing, Float ..... Plastic
Seals ..... Nitrile
Springs, Push Rod ..... Stainless Steel
Knob ..... Plastic
Filter Elements – 40 Micron (Standard) ..... Plastic
5 Micron (Optional) ..... Plastic
Adsorber (Optional) ..... Activated Charcoal
Seals ..... Nitrile
Sight Gauge ..... Polyamide
Springs – Poppet ..... Stainless
Control ..... Steel

Parker Hannifin Corporation
Pneumatic Division
Richland, Michigan
www.parker.com/pneumatics

P3NE Filter / Regulator – Hi-Flow

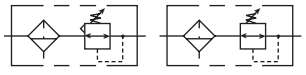

Features

- Port blocks (PB) available to provide 1-1/2" port extension to 1" ported bodies.
- Excellent water removal efficiency.
- Metal bowl with sight gauge.
- Large filter element surface guarantees low pressure drop and increased element life.
- Twist drain as standard, optional auto drain.
- Self relieving feature plus balanced poppet provides quick response and accurate pressure regulation.
- Solid control piston for extended life.
- High Flow: 3/4" – 250 SCFM§
  1" – 250 SCFM§
  1-1/2 – 250 SCFM§

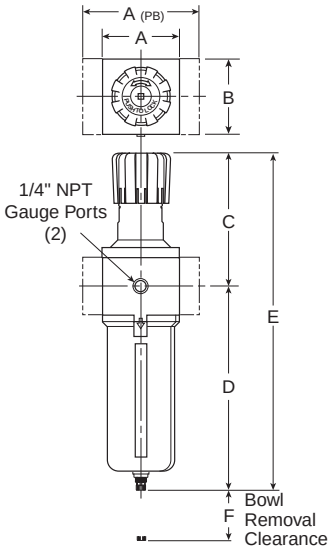

Port Size	NPT	
	Twist Drain	Automatic Float Drain
Metal Bowl / Sight Gauge		
3/4"	**P3NEA96GSMBNN**	**P3NEA96GSABNN**
1"	**P3NEA98GSMBNN**	**P3NEA98GSABNN**
1-1/2"*	**P3NEA9PGSMBNN**	**P3NEA9PGSABNN**

Standard part numbers shown bold. For other models refer to ordering information below.

* 1" Port Body with 1-1/2" Port Block.

§ SCFM = Standard cubic feet per minute at 90 psig inlet and 5 psig pressure drop, with 40 micron element.

P3NE Filter / Regulator Dimensions			
A 3.62 (92)	**A(PB)** 5.91 (150)	**B** 3.62 (92)	**C** 6.38 (162)
D† 9.57 (243)	**E†** 15.95 (405)	**F** 4.92 (125)	

Inches (mm)
† With Twist Drain or Auto Float Drain

⚠ WARNING

Product rupture can cause serious injury.
Do not connect regulator to bottled gas.
Do not exceed maximum primary pressure rating.

Ordering Information

P3N	E	A	9	8	G	S	M	B	N	N

Design Level

Port Type
- 1* G Thread (BSPP) Female
- 2 Rc Thread (BSPT) Female
- **9 NPT Female**

* 3/4 & 1 inch meet ISO 1179-1 Standard.

Port Size
- **6 3/4" (w/o Port Blocks)**
- **8 1" (w/o Port Blocks)**
- **P 1-1/2" Port Blocks (w/ 1" Ported Body)**

Element
- A Adsorber
- E 5 Micron
- **G 40 Micron**

Bowl
- **S Metal Bowl w/ Sight Gauge**

Drains
- **M Twist Drain**
- A Automatic Float Drain
- P Push 'N' Drain
- S Semi-Auto Drain

Relief
- **B Relieving**
- N Non-Relieving

Adjustment
- **N Non-Rising Knob**

Pressure Range
- **w/o Gauge**
- L 60 PSI (0 to 4 bar)
- **N 125 PSI (0 to 8 bar)**
- H 250 PSI (0 to 17 bar)
- **w/ Gauge**
- M 60 PSI (0 to 4 bar)
- **G 125 PSI (0 to 8 bar)**
- J 250 PSI (0 to 17 bar)

BOLD ITEMS ARE MOST POPULAR.

Parker Hannifin Corporation
Pneumatic Division
Richland, Michigan
www.parker.com/pneumatics

Technical Information

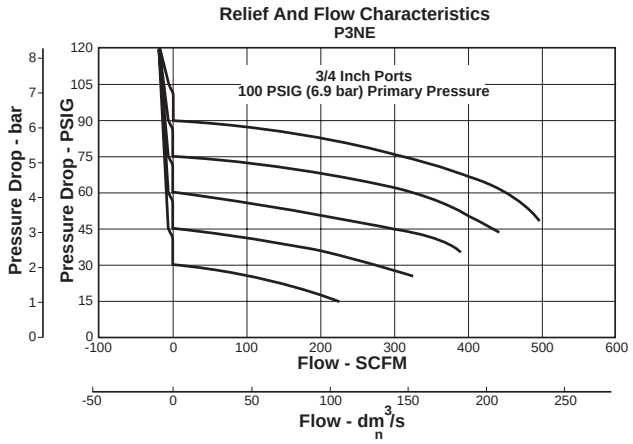

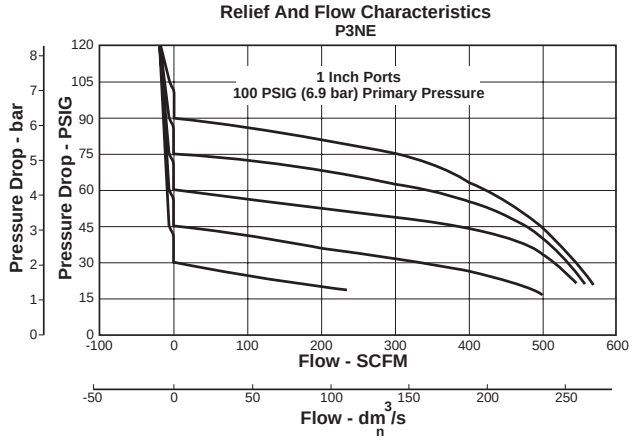

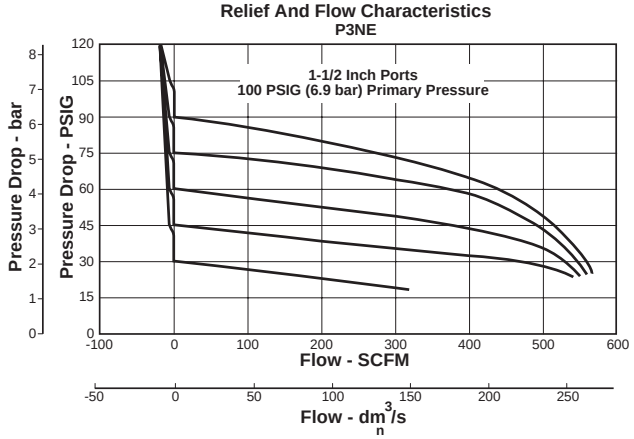

CAUTION:

REGULATOR PRESSURE ADJUSTMENT – The working range of knob adjustment is designed to permit outlet pressures within their full range. Pressure adjustment beyond this range is also possible because the knob is not a limiting device. This is a common characteristic of most industrial regulators, and limiting devices may be obtained only by special design.

For best performance, regulated pressure should always be set by increasing the pressure up to the desired setting.

P3NE Filter / Regulator Kits & Accessories

Bowl Kits –
Metal Bowl – Sight Gauge / Automatic Float Drain P3NKA00BSA
Sight Gauge / Twist Drain P3NKA00BSM
Sight Gauge / Push 'N' Drain P3NKA00BSP

Bowl Latch Kit C11A33

Control Knob P3NKA00PN

Drain Kit – Automatic Float Drain PS506P
Semi-Auto Drain PS511P
Twist Drain PS512P
Push 'N' Drain PS513P

Filter Element Kits – 40 Micron P3NKA00ESG
5 Micron P3NKA00ESE
Adsorber P3NKA00ESA

Gauges – 60 psig (0 to 4.1 bar) K4520N14060
160 psig (0 to 11.0 bar) K4520N14160
300 psig (0 to 20.0 bar) K4520N14300

Mounting Bracket Kit* P3NKA00MW

Service Kit – Relieving P3NKA00RR
Non-Relieving P3NKA00RN

Sight Gauge Kit P3NKA00PE

Springs – 1-60 psig Range C10A1304
2-125 psig Range C10A1308
5-250 psig Range C10A1317

* If 1-1/2 BSPP E02 fittings are required, use P3NKA0BMW.

Specifications

Bowl Capacity ..... 18.0 Ounces
Gauge Ports (2) ..... 1/4 Inch
Port Threads ..... 3/4, 1, 1-1/2* Inch
Pressure & Temperature Rating –..... 0 to 250 psig (0 to 17.2 bar)
32°F to 175°F (0°C to 80°C)
For Secondary Pressure Ranges see above charts.
Automatic Float Drain – 15 to 250 psig (1.0 to 17.2 bar)
Sump Capacity ..... 6.8 Ounces
Weight – 3/4" ..... 5.3 lb. (2.4 kg)
1" ..... 5.3 lb. (2.4 kg)
1-1/2"* ..... 6.43 lb. (2.9 kg)

Materials of Construction

Adjusting Stem ..... Steel
Body, Bonnet, Bowl ..... Aluminum
Drain ..... Plastic
Filter Elements – 40 Micron (Standard) ..... Plastic
5 Micron (Optional) ..... Plastic
Adsorber (Optional) ..... Activated Charcoal
Knob ..... Plastic
Piston ..... Plastic
Seals ..... Nitrile
Sight Gauge ..... Polyamide (Nylon)
Springs – Poppet & Control ..... Steel

* 1" Port Body with 1-1/2" Port Block.

Parker Hannifin Corporation
Pneumatic Division
Richland, Michigan
www.parker.com/pneumatics

12E Filter / Regulator – Coalescing

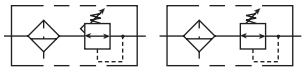

Features

- Space saving package offers both coalescer and regulator features for optimal performance.
- Removes liquid, aerosol and sub-micron particles.
- Rolling diaphragm for extended life.
- Removable non-rising knob for panel mounting and tamper resistance.
- Quick response, and accurate pressure regulation regardless of changing flow or inlet pressure.
- Two high flow 1/4" gauge ports can be used as additional outlets.
- High Flow: Grade 6 Element
  3/8" – 35 SCFM§
  1/2" – 40 SCFM§
  3/4" – 45 SCFM§

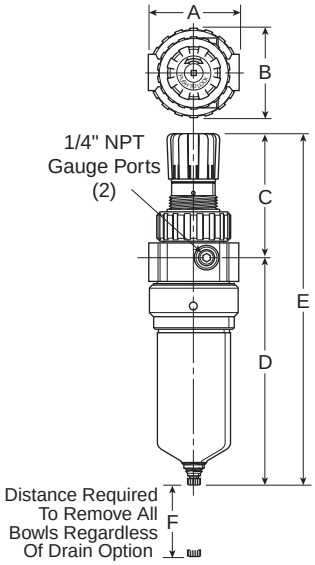

Port Size	NPT
Twist Drain	
3/8"	**12E23E13A***
1/2"	**12E33E13A***
3/4"	**12E43E13A***
Automatic Float Drain	
3/8"	**12E27E13A***
1/2"	**12E37E13A***
3/4"	**12E47E13A***

Standard part numbers shown bold. For other models refer to ordering information below.

§ SCFM = Standard cubic feet per minute at 150 psig inlet, 90 psig no flow secondary setting and 10 psig pressure drop.

NOTE: 2.00 Dia. (50.8 mm) hole required for panel mounting.

12E Filter / Regulator Dimensions			
A	**B**	**C**	**D**
3.24 (82)	3.25 (83)	4.79 (122)	8.20 (208)
D†	**E**	**E†**	**F**
8.17 (208)	12.99 (330)	12.96 (329)	3.29 (84)

Inches (mm)
† With Twist Drain or Auto Float Drain

⚠ WARNING

Product rupture can cause serious injury.
Do not connect regulator to bottled gas.
Do not exceed maximum primary pressure rating.

Ordering Information

12E	3	3	E	13	A	*	—	—	---

Port Size
- **2 3/8 Inch**
- **3 1/2 Inch**
- **4 3/4 Inch**

Bowl Options
- Metal Bowl
- 3 Twist Drain
- 7 Automatic Float Drain

Elements
- **E Grade 6**
- H Grade 10

Port Size
- Without Gauge
- 11 60 psig
- **13 125 psig**
- 15 250 psig
- With Gauge
- 16 60 psig
- 18 125 psig
- 21 250 psig

Relief
- **A Relieving**
- L Non-Relieving

Engineering Level
- * Will be Entered at Factory

Port Type
- **Blank NPT**
- 1* BSPP
- 2 BSPT

* 3/8 & 1/2 inch meet ISO 1179-1 Standard.

Options
- **Blank No Options**
- L† Preset Non-Adjustable
- P† Preset Adjustable

† Inlet Pressure is 100 psig. For other pressures, contact factory.

Preset
- **Blank None**
- XXX* Preset Pressure

* Available Preset Range, 10 to 90 psig in 5 psig increments. For higher pressures, contact factory.

(Example: 065 = 65 psig)

Spring Type by Preset / Limited Pressure:
For Preset / Limited Pressure 10 to 25 use 30 PSI Spring
For Preset / Limited Pressure 26 to 50 use 60 PSI Spring
For Preset / Limited Pressure 51 to 90 use 125 PSI Spring

BOLD ITEMS ARE MOST POPULAR.

Parker Hannifin Corporation
Pneumatic Division
Richland, Michigan
www.parker.com/pneumatics

Technical Information

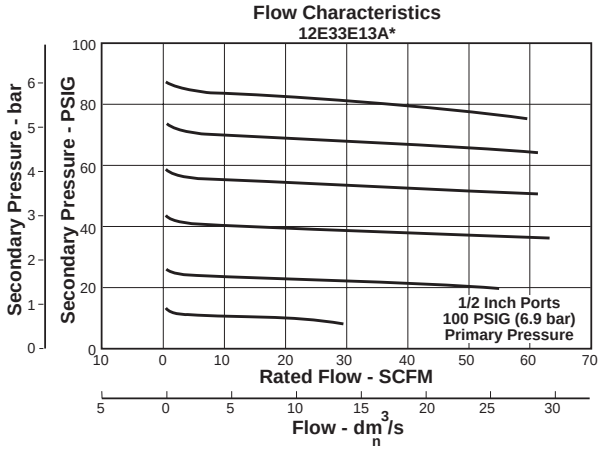

CAUTION:

REGULATOR PRESSURE ADJUSTMENT – The working range of knob adjustment is designed to permit outlet pressures within their full range. Pressure adjustment beyond this range is also possible because the knob is not a limiting device. This is a common characteristic of most industrial regulators, and limiting devices may be obtained only by special design.

For best performance, regulated pressure should always be set by increasing the pressure up to the desired setting.

12E Filter / Regulator Kits & Accessories

Bonnet Assembly Kit PS715P

Bowl Kits –
Metal Bowl – Automatic Float Drain PS826P
Twist Drain PS834P
Push 'N' Drain PS825P

Control Knob P04069B

Drain Kits – Automatic Float Drain PS506P
Twist Drain PS512P
Push 'N' Drain PS513P

Filter Element Kits – Grade 6 ..... PS884P
Grade 10 ..... PS885P

Gauges – 60 psig (0 to 4.1 bar) K4520N14060
160 psig (0 to 11.0 bar) K4520N14160
300 psig (0 to 20.0 bar) K4520N14300

Mounting Bracket Kit (Includes Panel Mount Nut) PS807P

Service Kit – Relieving (Includes Poppet) PS886P

Springs – 1- 30 psig Range P01698
1- 60 psig Range P04062
2- 125 psig Range P04063
5- 250 psig Range P04064

Tamperproof Kit (Key Lock) PS737P

Specifications

Bowl Capacity ..... 7.2 Ounces

Gauge Ports (2) ..... 1/4 Inch
(Can be used as Additional Full Flow 1/4" Outlet Ports)

Port Threads ..... 3/8, 1/2, 3/4 Inch

Pressure & Temperature Ratings –
Metal Bowl – 0 to 250 psig (0 to 17.2 bar)
32°F to 175°F (0°C to 80°C)

Secondary Pressure Ranges –
Standard Pressure ..... 2 to 125 psig (0 to 8.6 bar)
Low Pressure ..... 1 to 60 psig (0 to 4.1 bar)
High Pressure ..... 5 to 250 psig (0.4 to 17.2 bar)

Sump Capacity ..... 2.8 Ounces

Weight ..... 2.5 lb. (1.1 kg)

Materials of Construction

Adjusting Stem ..... Steel

Body ..... Zinc

Bonnet, Internal Parts ..... Plastic

Bowls Available – Metal (Without Sight Gauge) ..... Zinc

Collar For Bonnet ..... Metal

Control Spring ..... Steel

Diaphragm ..... Nitrile

Drains – Manual Twist Drain Standard
Body & Nut ..... Plastic
Manual Push 'N' Drain Optional
Body ..... Nitrile
Stem ..... Brass
Automatic Float Drain Optional
(Interchangeable for Field Conversions)
Operating Range ..... 10 to 250 psig (.7 to 17.2 bar)
Housing, Float ..... Plastic
Seals ..... Nitrile
Springs, Push Rod ..... Stainless Steel

Knob ..... Plastic

Filter Element –
Borosilicate & felt glass fibers 99.97% DOP efficiency
Largest Aerosol Particle Passed (Grade 6) ..... 0.75 Microns
Largest Solid Particle Passed (Grade 6) ..... 0.30 Microns

Seals ..... Nitrile

Sight Gauge ..... Polyamide

Springs – Poppet ..... Stainless

Parker Hannifin Corporation
Pneumatic Division
Richland, Michigan
www.parker.com/pneumatics

Micro-Mist Lubricators

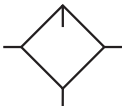

- Pipe Sizes 1/4 thru 3/4 Inch
- Flows to 500 SCFM
- Pressures to 250 psig

Micro-Mist Air Lubricators are designed to provide optimum and uniform lubrication with fine micro-mist particles of 2 micron or smaller, to pneumatic components even through complex piping arrangements.

- Economy 15L Series, 1/4 and 3/8 Inch
- Compact 16L Series, 1/4, 3/8 and 1/2 Inch
- Standard 17L Series, 3/8, 1/2 and 3/4 Inch

Lubricator Selection

1. Determine maximum system flow requirements.
2. Determine maximum allowable pressure drop at rated flow in SCFM.
3. Refer to flow chart and select lubricator by choosing the curve that offers minimum pressure drop at desired flow in SCFM.

Reading Flow Charts to Size Micro-Mist Lubricators

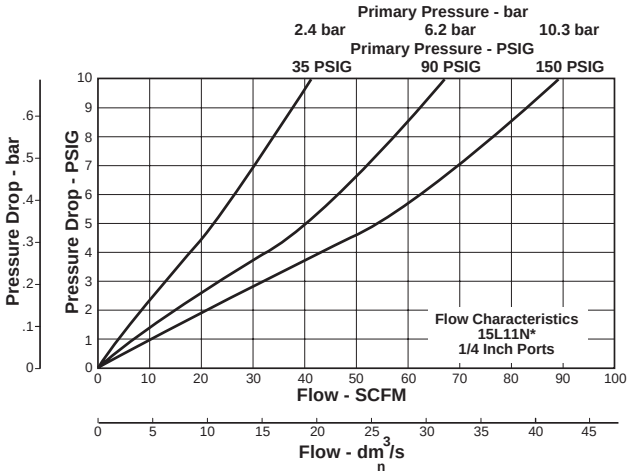

Once the required flow is determined for a pneumatic application the lubricator can be selected by using the flow chart. To read the lubricator flow chart, first determine the inlet pressure that will be used. Find the appropriate pressure curve on the graph. Each graph will contain three pressure curves. If the required inlet pressure is not on the graph, interpolate a similar curve for the required pressure. Next, determine the acceptable pressure drop across the lubricator and locate it on the vertical axis. Find the intersection point of the acceptable pressure drop and the inlet pressure curve. At this point follow a vertical path downward to view the flow in SCFM. If the flow is too low, select a larger port size or body size to give the required flow. If the flow is higher than necessary, select a smaller port size or body size to give the required flow.

F442 Oil

Quantity	Part Numbers
1 Quart	F442001
1 Gallon	F442002
12 Quart Case	F442003
4 Gallon Case	F442005

Petroleum based oil of 100 to 200 SSU viscosity at 100°F and an aniline point greater than 200°F

(DO NOT USE OILS WITH ADDITIVES, COMPOUNDED OILS CONTAINING SOLVENTS, GRAPHITE, DETERGENTS, OR SYNTHETIC OILS.)

Parker Hannifin Corporation
Pneumatic Division
Richland, Michigan
www.parker.com/pneumatics

Lubricators

Micro-Mist

The Micro-Mist lubricators inject a micro-mist of oil into the flowing air stream to automatically provide the correct amount of internal lubrication for air tools and other pneumatic devices. This type of lubricator can be precisely adjusted to a very low oil flow rate because only a portion of the oil drops seen in the sight dome goes downstream. The lubricator should be used where only a very minute amount of lubricant is desirable or where it is necessary for the oil to remain in suspension in the air stream for long distances.

Operation

Air flowing through the unit goes through two paths. At low air flow rates, the majority of the air flows through venturi section **(A)**. The rest of the air slightly deflects and flows by the flapper **(B)**. The velocity of the air flowing through venturi section **(A)** creates a pressure drop at throat section **(C)**. This lower pressure allows oil to be forced from the reservoir through the pickup tube **(D)** past the check ball **(E)**, to the dome assembly where the rate of oil flow is controlled by metering screw **(F)**. Rotation of the metering screw **(F)** in the counterclockwise direction increases the oil flow rate; in the clockwise direction decreases the oil flow rate.

Oil then flows through the clearance between the inner and outer sight domes **(G)** where drops are formed and drip into the nozzle tube **(H)**. Here it is then broken into fine particles as it expands into the low pressure venturi. From there, the atomized oil flows through the precision orifice **(J)**. This action causes the larger particles of oil to fall back into the reservoir where it can recirculate through the system. The remaining mist of fine particles (5 micron or smaller – about 3% of which passed through the sight dome) is then carried through opening **(K)** where it joins and mixes with air that bypassed the flapper **(B)**. As air flow rate increases, the flapper **(B)** deflects, allowing most of the inlet air to bypass the venturi section **(A)**.

However, a proportion of the inlet air passes through the venturi, assuring that oil delivery increases linearly with increased air flow rate. This proportioning method is advantageous at low inlet flows because the venturi design remains efficient.

The check ball **(E)** prevents reverse oil flow down the pickup tube when air flow stops. Thus, oil delivery can resume immediately when air flow restarts. **Micro-Mist Lubricators can only be filled when the air supply is shut off.**

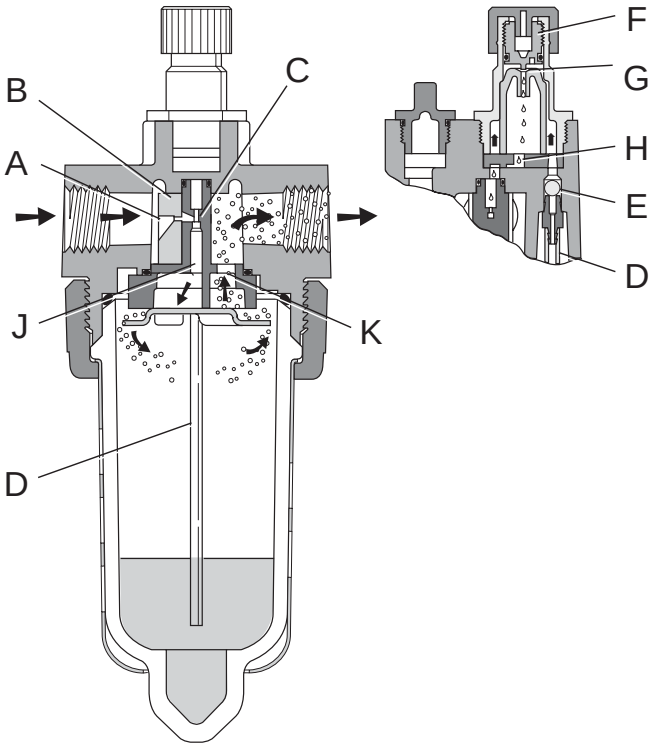

Parker Hannifin Corporation
Pneumatic Division
Richland, Michigan
www.parker.com/pneumatics

15L Micro-Mist Lubricators – Economy

Features

- Proportional oil delivery over a wide range of air flows.
- Generates oil particles of 5 micron or smaller downstream to lubricate systems having complex piping arrangements.
- Precision needle valve assures repeatable oil delivery and provides simple adjustment of delivery rate.
- Ideal for low and high flow applications with changing air flow.
- Transparent sight dome for 360° visibility.
- Removable drip control knob for tamper resistance.
- High Flow: 1/4" – 40 SCFM§
  3/8" – 40 SCFM§

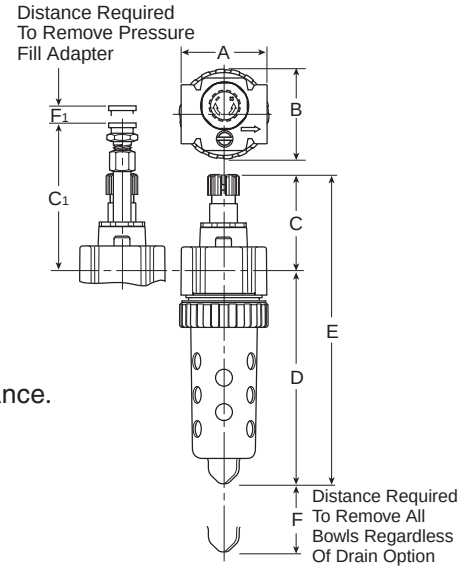

Port Size	NPT	
	Twist Drain	No Drain
Poly Bowl ‡ / Metal Guard		
1/4"	—	**15L12N***
3/8"	—	**15L22N***
Metal Bowl / Sight Gauge		
1/4"	**15L14N***	—
3/8"	**15L24N***	—

Standard part numbers shown bold. For other models refer to ordering information below.

‡ For polycarbonate bowl and sight dome, see Caution on page C2.

§ SCFM = Standard cubic feet per minute at 90 psig inlet and 5 psig pressure drop.

15L Lubricator Dimensions			
A 2.00 (51)	**B** 2.06 (52)	**C** 2.26 (57)	**C1** 3.35 (85)
D 5.12 (130)	**D†** 5.35 (136)	**E** 7.38 (187)	**E†** 7.61 (193)
F 1.77 (45)	**F†** .39 (10)		

Inches (mm)

† With Twist Drain.

Ordering Information

15L	1	2	N	*	—	—

Port Size

1	**1/4 Inch**
2	**3/8 Inch**

Bowl Options

Polycarbonate Bowl	Metal Bowl
1 No Drain	**4 Sight Gauge / Twist Drain**
2 Metal Bowl Guard / No Drain	8 Sight Gauge / Pressure Fill
5 Pressure Fill	
6 Metal Bowl Guard / Pressure Fill	

Fill Options

B	With Fill Plug
F	With Body Pressure Fill
N	**No Fill Plug**

Engineering Level

*	Will be Entered at Factory

Port Type

Blank	**NPT**
1*	BSPP
2	BSPT

* 1/4 & 3/8 inch meet ISO 1179-1 Standard.

Options

Blank	**No Options**

BOLD ITEMS ARE MOST POPULAR.

Parker Hannifin Corporation
Pneumatic Division
Richland, Michigan
www.parker.com/pneumatics

Technical Information

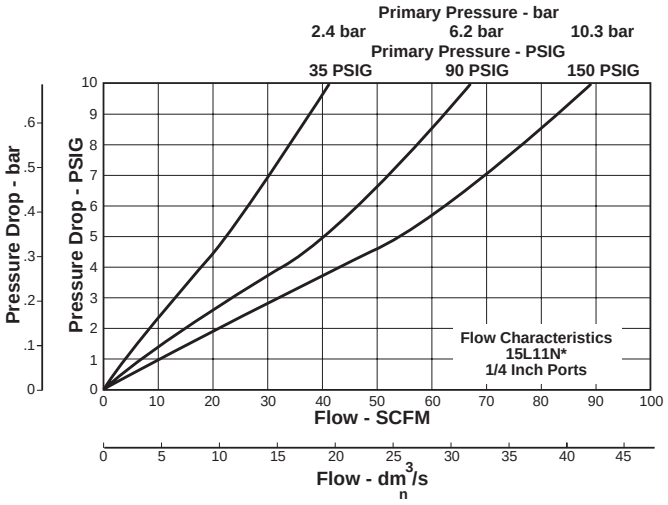

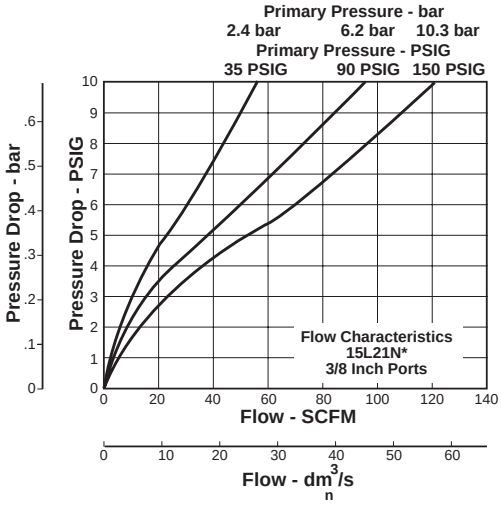

15L Micro-Mist Lubricator Kits & Accessories

Adjustment Knob P04121
Bowl Guard Kit PS905P
Bowl Kits –
Poly Bowl – No Drain PS946P
Metal Bowl – Sight Gauge / Twist Drain PS929P
Drain Kit – Twist Drain PS512P
Mounting Bracket Kit PS943P
Oil – 1 Gal. F442002
12 Quart Case F442003
4 Gallon Case F442005
Pressure Fill Adapter Kit PS916P
Service Kit PS948P
Sight Dome Kit PS740P
Sight Gauge Kit PS914P

Specifications

Bowl Capacity ..... 2.0 Ounces
Minimum Flow for Lubrication ..... 2 SCFM at 100 psig
Port Threads ..... 1/4, 3/8 Inch
Pressure & Temperature Ratings –
Polycarbonate Bowl – 0 to 150 psig (0 to 10.3 bar)
32°F to 125°F (0°C to 52°C)
Metal Bowl – 0 to 250 psig (0 to 17.2 bar)
32°F to 175°F (0°C to 80°C)

Suggested Lubricant ..... F442 Oil
Petroleum based oil of 100 to 200 SSU viscosity at 100°F (38°C) and an aniline point greater than 200°F (93
(DO NOT USE OILS WITH ADDITIVES, COMPOUNDED OILS CONTAINING SOLVENTS, GRAPHITE, DETERGENTS, OR SYNTHETIC OILS.)
Weight ..... 1 lb. (0.45 kg)

Materials of Construction

Body ..... Zinc
Bowls – Transparent ..... Polycarbonate
Metal (With Sight Gauge) ..... Zinc
Bowl Guard ..... Steel
Collar ..... Plastic
Drains – Twist – Body & Nut ..... Plastic
Injector Meter Block & Base Assembly ..... Plastic
Seals ..... Nitrile
Sight Dome ..... Polycarbonate
Sight Gauge ..... Polyamide (Nylon)

Parker Hannifin Corporation
Pneumatic Division
Richland, Michigan
www.parker.com/pneumatics

16L Micro-Mist Lubricators – Compact

Features

- Proportional oil delivery over a wide range of air flows.
- Generates oil particles of 5 micron or smaller downstream to lubricate systems having complex piping arrangements.
- Precision needle valve assures repeatable oil delivery and provides simple adjustment of delivery rate.
- Ideal for low and high flow applications with changing air flow.
- Transparent sight dome for 360° visibility.
- Yellow fill cap identifies Micro-Mist Lubricator.
- High Flow: 1/4" – 40 SCFM §
  3/8" – 60 SCFM §
  1/2" – 90 SCFM §

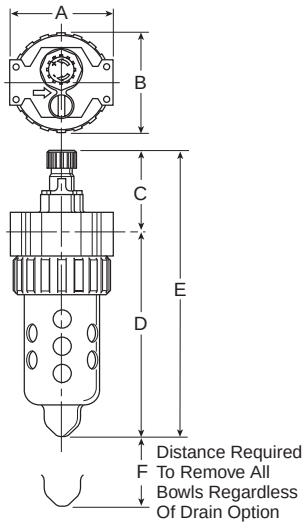

Port Size	NPT	
	Twist Drain	No Drain
Poly Bowl ‡ / Metal Guard		
1/4"	—	**16L12B***
3/8"	—	**16L22B***
1/2"	—	**16L32B***
Metal Bowl / Sight Gauge		
1/4"	**16L14B***	—
3/8"	**16L24B***	—
1/2"	**16L34B***	—

Standard part numbers shown bold. For other models refer to ordering information below.

‡ For polycarbonate bowl and sight dome, see Caution on page C2.

§ SCFM = Standard cubic feet per minute at 90 psig inlet and 5 psig pressure drop.

16L Lubricator Dimensions		
A 2.81 (71)	**B** 2.74 (70)	**C** 2.24 (57)
D 5.58 (142)	**D†** 5.69 (145)	**E** 7.82 (199)
E† 7.93 (201)	**F** 2.25 (57)	

Inches (mm)
†With Twist Drain.

Ordering Information

16L	1	2	B	*	—

Port Size
- **1 1/4 Inch**
- **2 3/8 Inch**
- **3 1/2 Inch**

Bowl Options

Polycarbonate Bowl
- 1 No Drain
- **2 Metal Bowl Guard / No Drain**
- 5 Pressure Fill
- 6 Metal Bowl Guard / Pressure Fill
- J Auto Fill Device
- K Metal Bowl Guard / Auto Fill Device
- R Twist Drain
- N Metal Bowl Guard / Twist Drain

Metal Bowl
- **4 Sight Gauge / Twist Drain**
- 8 Sight Gauge / Pressure Fill
- D Sight Gauge / Liquid Level Sensor
- M Sight Gauge / Auto Fill Device

Options
- **B With Fill Plug**
- C With Fill Plug/Nylon Sight Dome
- F With Body Pressure Fill
- G With Body Pressure Fill / Nylon Sight Dome

Engineering Level
- * Will be Entered at Factory

Port Type

Blank	NPT
1*	BSPP
2	BSPT

* 1/4 & 3/8 inch meet ISO 1179-1 Standard.

BOLD ITEMS ARE MOST POPULAR.

Parker Hannifin Corporation
Pneumatic Division
Richland, Michigan
www.parker.com/pneumatics

Technical Information

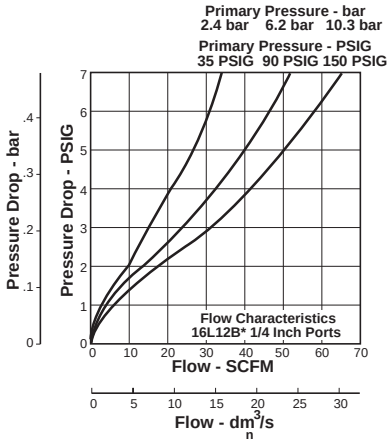

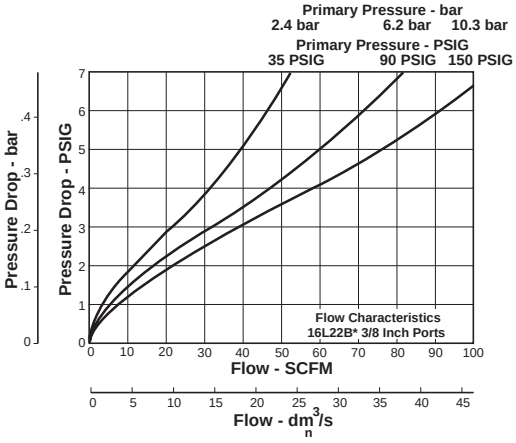

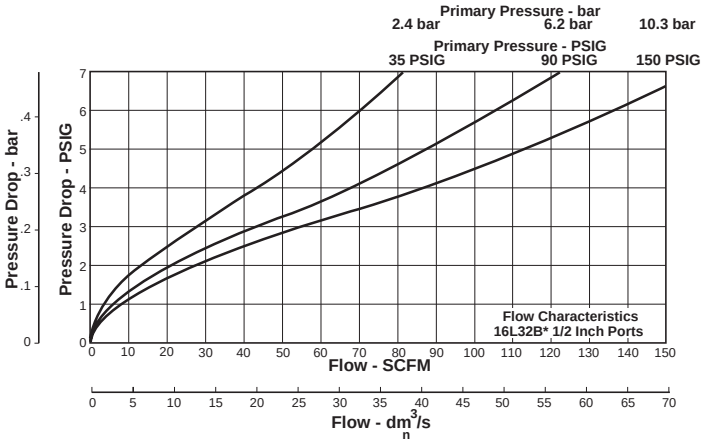

16L Micro-Mist Lubricator Kits & Accessories

Adjustment Knob P04121
Bowl Guard Kit PS705P
Bowl Kits –
Poly Bowl – No Drain PS746P
Twist Drain PS717P
Pressure Fill PS719P
Remote Fill PS728P
Metal Bowl – Sight Gauge / Twist Drain PS729P
Sight Gauge / Pressure Fill PS720P
Drain Kit – Twist Drain PS512P
Fill Cap Kit PS742P
Lubricator Service Kit PS748P
Mounting Bracket Kit PS743P
Oil – 1 Gal. F442002
12 Quart Case F442003
4 Gallon Case F442005
Pressure Fill Adapter Kit PS716P
Pressure Fill Button P11912
Remote Auto-Fill Device PS505CP
Sight Dome / Fill Cap Kit PS739P
Sight Dome Kit PS740P
Nylon Sight Dome Kit PS740N

Specifications

Bowl Capacity ..... 2.60 Ounces
Minimum Flow for Lubrication ..... 1 SCFM at 100 psig
Port Threads ..... 1/4, 3/8, 1/2 Inch
Pressure & Temperature Rating –
Polycarbonate Bowl – 0 to 150 psig (0 to 10.3 bar)
32°F to 125°F (0°C to 52°C)
Metal Bowl – 0 to 250 psig (0 to 17.2 bar)
32°F to 175°F (0°C to 80°C)
Suggested Lubricant ..... F442 Oil
Petroleum based oil of 100 to 200 SSU viscosity at 100°F (38°C) and an aniline point greater than 200°F (93
(DO NOT USE OILS WITH ADDITIVES, COMPOUNDED OILS CONTAINING SOLVENTS, GRAPHITE, DETERGENTS, OR SYNTHETIC OILS.)
Weight ..... 1.2 lb. (.5 kg)

Materials of Construction

Body ..... Zinc
Bowls – Transparent ..... Polycarbonate
Metal (With Sight Gauge) ..... Zinc
Bowl Guard ..... Steel
Collar ..... Plastic
Drain – Twist – Body & Nut ..... Plastic
Injector Meter Block & Base Assembly ..... Plastic
Seals ..... Nitrile
Sight Dome ..... Polycarbonate
Sight Gauge ..... Polyamide (Nylon)

Parker Hannifin Corporation
Pneumatic Division
Richland, Michigan
www.parker.com/pneumatics

17L Micro-Mist Lubricators – Standard

Features

- Proportional oil delivery over a wide range of air flows.
- Generates oil particles of 5 micron or smaller downstream to lubricate systems having complex piping arrangements.
- Precision needle valve assures repeatable oil delivery and provides simple adjustment of delivery rate.
- Ideal for low and high flow applications with changing air flow.
- Transparent sight dome for 360° visibility.
- Yellow fill cap identifies Micro-Mist Lubricator.
- High Flow: 3/8" – 60 SCFM§
  1/2" – 90 SCFM§
  3/4" – 90 SCFM§

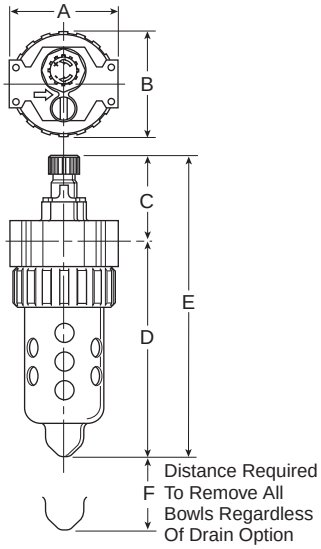

Port Size	NPT	
	Twist Drain	No Drain
Poly Bowl ‡ / Metal Guard		
3/8"	—	**17L22B***
1/2"	—	**17L32B***
3/4"	—	**17L42B***
Metal Bowl / Sight Gauge		
3/8"	**17L24B***	—
1/2"	**17L34B***	—
3/4"	**17L44B***	—

Standard part numbers shown bold. For other models refer to ordering information below.

‡ For polycarbonate bowl and sight dome, see Caution on page C2.

§ SCFM = Standard cubic feet per minute at 90 psig inlet and 5 psig pressure drop.

17L Lubricator Dimensions		
A 3.24 (82)	**B** 3.25 (83)	**C** 2.41 (61)
D 6.86 (174)	**D†** 6.95 (177)	**E** 9.09 (231)
E† 9.35 (237)	**F** 2.75 (70)	

Inches (mm)

† With Twist Drain.

Ordering Information

17L	2	2	B	*	—

Port Size

- **2 3/8 Inch**
- **3 1/2 Inch**
- **4 3/4 Inch**

Bowl Options

Polycarbonate Bowl
- 1 No Drain
- **2 Metal Bowl Guard / No Drain**
- 5 Pressure Fill
- 6 Metal Bowl Guard / Pressure Fill
- J Auto Fill Device
- K Metal Bowl Guard / Auto Fill Device
- R Twist Drain
- N Metal Bowl Guard / Twist Drain

Metal Bowl
- **4 Sight Gauge / Twist Drain**
- 8 Sight Gauge / Pressure Fill
- D Sight Gauge / Liquid Level Sensor
- M Sight Gauge / Auto Fill Device

Options

- **B With Fill Plug**
- C With Fill Plug/Nylon Sight Dome
- F With Body Pressure Fill
- G With Body Pressure Fill / Nylon Sight Dome

Engineering Level

- * Will be Entered at Factory

Port Type

Blank	NPT
1	BSPP
2	BSPT

* 3/8 & 1/2 inch meet ISO 1179-1 Standard.

BOLD ITEMS ARE MOST POPULAR.

Parker Hannifin Corporation
Pneumatic Division
Richland, Michigan
www.parker.com/pneumatics

Technical Information

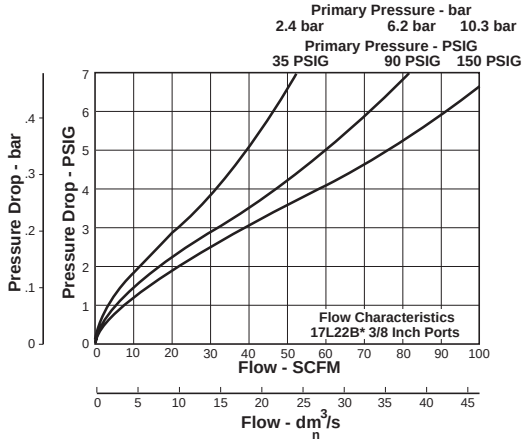

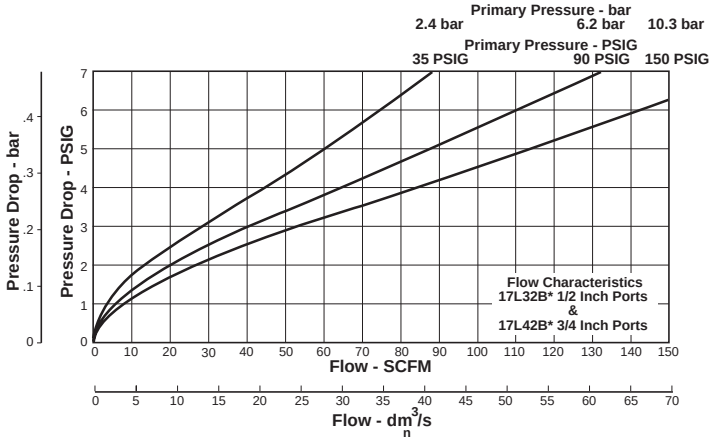

17L Micro-Mist Lubricator Kits & Accessories

Adjustment Knob P04121
Bowl Guard Kit PS805P
Bowl Kits –
Poly Bowl – No Drain PS846P
Twist Drain PS817P
Pressure Fill PS819P
Remote Fill PS828P
Metal Bowl – Sight Gauge / Twist Drain PS829P
Sight Gauge / Pressure Fill PS820P
Drain Kit – Twist Drain PS512P
Fill Cap Kit PS742P
Lubricator Service Kit PS748P
Mounting Bracket Kit PS843P
Oil – 1 Gal. F442002
12 Quart Case F442003
4 Gallon Case F442005
Pressure Fill Adapter Kit PS716P
Pressure Fill Button P11912
Remote Auto-Fill Device PS505CP
Sight Dome / Fill Cap Kit PS739P
Sight Dome Kit PS740P
Nylon Sight Dome Kit PS740N

Specifications

Bowl Capacity ..... 4.9 Ounces
Minimum Flow for Lubrication ..... 1 SCFM at 100 psig
Port Threads ..... 3/8, 1/2, 3/4 Inch
Pressure & Temperature Rating –
Polycarbonate Bowl – 0 to 150 psig (0 to 10.3 bar)
32°F to 125°F (0°C to 52°C)
Metal Bowl – 0 to 250 psig (0 to 17.2 bar)
32°F to 175°F (0°C to 80°C)
Suggested Lubricant ..... F442 Oil
Petroleum based oil of 100 to 200 SSU viscosity at 100°F (38°C) and an aniline point greater than 200°F (93
(DO NOT USE OILS WITH ADDITIVES, COMPOUNDED OILS CONTAINING SOLVENTS, GRAPHITE, DETERGENTS, OR SYNTHETIC OILS.)
Weight ..... 1.9 lb. (.9 kg)

Materials of Construction

Body ..... Zinc
Bowls – Transparent ..... Polycarbonate
Metal (With Sight Gauge) ..... Zinc
Bowl Guard ..... Steel
Collar ..... Plastic or Metal
Drain – Twist – Body & Nut ..... Plastic
Injector Meter Block & Base Assembly ..... Plastic
Seals ..... Nitrile
Sight Dome ..... Polycarbonate
Sight Gauge ..... Polyamide (Nylon)

Parker Hannifin Corporation
Pneumatic Division
Richland, Michigan
www.parker.com/pneumatics

Mist Lubricators

- Pipe Sizes 1/8 thru 2 Inch
- Flows to 1000 SCFM
- Pressures to 250 psig

  Mist Air Lubricators are designed to provide lubrication for most general applications in a pneumatic system. Units should be installed close to the application ensuring effective distribution of oil to pneumatic components.
- Miniature 02L Series, 1/4 and 3/8 Inch
- Miniature 04L Series, 1/8 and 1/4 Inch
- Compact 06L Series, 1/4, 3/8 and 1/2 Inch
- Standard 07L Series, 3/8, 1/2 and 3/4 Inch
- Hi-Flow P3NL Series, 3/4, 1 and 1-1/2 Inch
- Hi-Flow L606 Series, 3/4, 1, 1-1/4 and 1-1/2 Inch
- Hi-Flow 09L Series, 2 Inch

Lubricator Selection

1. Determine maximum system flow requirements.
2. Determine maximum allowable pressure drop at rated flow in SCFM.
3. Refer to flow chart and select lubricator by choosing the curve that offers minimum pressure drop at desired flow in SCFM.

Reading Flow Charts to Size Mist Lubricators

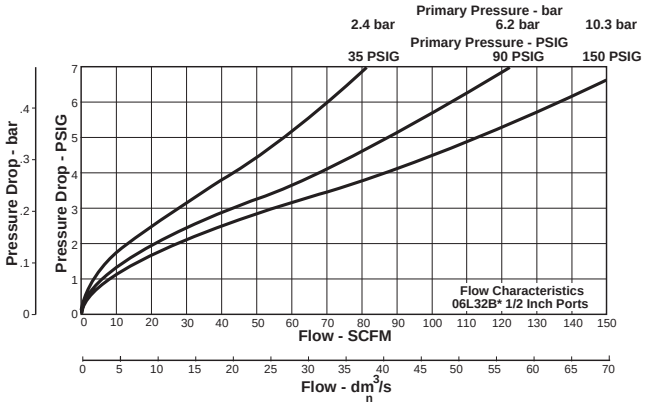

Once the required flow is determined for a pneumatic application the lubricator can be selected by using the flow chart. To read the lubricator flow chart, first determine the inlet pressure that will be used. Find the appropriate pressure curve on the graph. Each graph will contain three pressure curves. If the required inlet pressure is not on the graph, interpolate a similar curve for the required pressure. Next, determine the acceptable pressure drop across the lubricator and locate it on the vertical axis. Find the intersection point of the acceptable pressure drop and the inlet pressure curve. At this point follow a vertical path downward to view the flow in SCFM.
If the flow is too low, select a larger port size or body size to give the required flow. If the flow is higher than necessary, select a smaller port size or body size to give the required flow.

F442 Oil

Quantity	Part Numbers
1 Quart	F442001
1 Gallon	F442002
12 Quart Case	F442003
4 Gallon Case	F442005

Petroleum based oil of 100 to 200 SSU viscosity at 100°F (38°C) and an aniline point greater than 200°F (93°C)

(DO NOT USE OILS WITH ADDITIVES, COMPOUNDED OILS CONTAINING SOLVENTS, GRAPHITE, DETERGENTS, OR SYNTHETIC OILS.)

Parker Hannifin Corporation
Pneumatic Division
Richland, Michigan
www.parker.com/pneumatics

Lubricators

Mist

These lubricators inject an oil aerosol into the flowing air stream to automatically provide the proper amount of internal lubrication to air operated tools or other pneumatic devices.

Operation

Air flowing through the unit goes through two paths. At low air flow rates, the majority of the air flows through venturi section **(A)**. The rest of the air slightly deflects and flows by the flapper **(B)**, restrictor disc **(M)** on the 09L. The velocity of the air flowing through venturi section **(A)** creates a pressure drop at throat section **(C)**. This lower pressure allows oil to be forced from the reservoir through the pickup tube **(D)** past the check ball **(E)**, to the dome assembly where the rate of oil flow is controlled by metering screw **(F)**. Rotation of the metering screw **(F)** in the counterclockwise direction increases the oil flow rate; in the clockwise direction decreases the oil flow rate. Oil then flows through the clearance between inner and outer sight domes **(G)** where drops are formed and drip into the nozzle tube **(H)**. On the 09L, oil flows through the drip tube **(F)** where drops are formed and drip into the throat section **(C)**. Here it is then broken into fine particles and mixed with the swirling air to be carried to the venturi outlet where it joins the air by passing the flapper **(B)**, **(M)**. As air flow rate increases, the flapper **(B)**, **(M)** deflects, allowing a greater part of the additional air to bypass the venturi section **(A)**. This assures the oil delivery rate increases linearly with increased air flow rate. The check ball **(E)** assures that when there is no oil flow the oil in the pickup tube does not return to the reservoir.

The bowl can be filled under pressure due to the action of the check ball **(J)**. When the fill cap is removed, air in the bowl escapes and pressure forces the check ball **(J)** to nearly seal at **(K)**. When the fill cap is replaced, the small amount of air flow past check ball **(J)** builds up pressure and together with the spring forces the check ball **(J)** off seat **(K)**, letting full line pressure into the bowl.

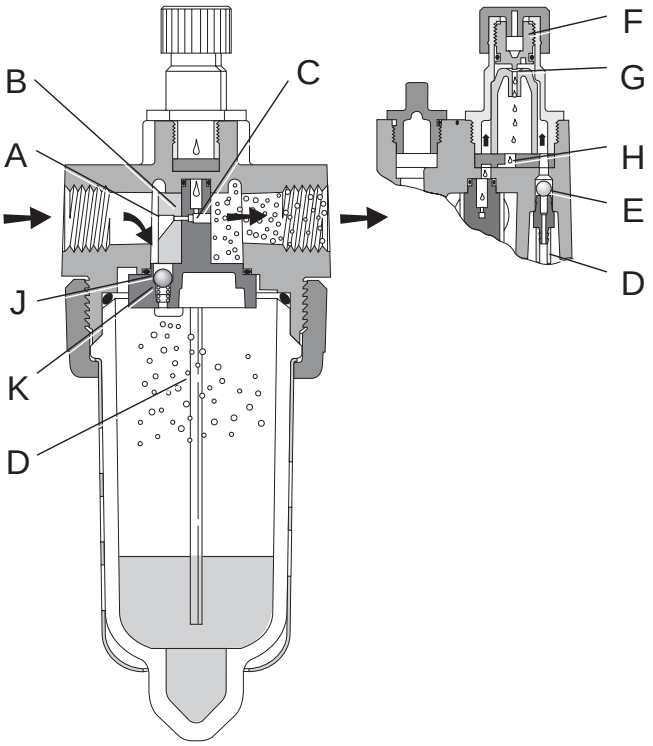

Parker Hannifin Corporation
Pneumatic Division
Richland, Michigan
www.parker.com/pneumatics

Parker Hannifin Corporation
Pneumatic Division
Richland, Michigan
www.parker.com/pneumatics

02L Lubricator – Miniature

Features

- Extends the service life of air operated hand tools.
- Reduces downtime of air operated equipment, saves money.
- Small / lightweight.
- Automatic lubrication with air tool operation.
- Adjustable oil flow.
- Corrosion resistant.
- Full swivel outlet port.

Application

In-Line Lubricators assure proper lubrication for small pneumatic hand tools. These in-line lubricators put the oil source right at the tool. Oil capacity is 1/4 oz. (1 ml), enough to last through an average 8-hour shift. This lubricator requires cyclical or intermittent airflow for proper operation, and consequently works best when installed at the tool inlet or on a short hose near the tool. The 02L cannot be filled under pressure.

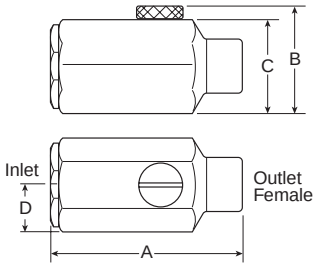

Dimensions

Part Number	A	B	C	D
02LFB	2.65 (67)	1.305 (33)	1.125 (28.5)	.65 (16.5)
02L1B	2.93 (74)	1.305 (33)	1.125 (28.5)	.65 (16.5)
02L2B	3.19 (81)	1.305 (33)	1.125 (28.5)	.65 (16.5)

Inches (mm)

Ordering Information

Port Size	Female Threads Inlet / Female Threads Outlet	Female Threads Inlet / Male Threads Outlet
1/4"	**02LFB**	**02L1B**
3/8"	**N/A**	**02L2B**

Specifications

Flow Capacity* (1/4) ..... 29 SCFM (13.6 dm^3/s)
(3/8) ..... 30 SCFM (14.2 dm^3/s)
Operating Temperature ..... 32° to 150°F (0° to 65.5°C)
Maximum Supply Pressure ..... 200 psig (13.8 bar)
Oil Capacity ..... 0.25 oz. (7.4 cm^3)
Port Size ..... 1/4, 3/8 NPT / BSPT
Weight ..... 0.2 lb. (0.1 kg)

* Inlet pressure 90 psig (6.2 bar). Pressure drop 5 PSID (0.3 bar).

Materials of Construction

Body ..... Aluminum
Seals ..... Nitrile
Suggested Lubricant F442 Oil
Petroleum based oil of 100 to 200 SSU viscosity at 100°F (38°C) and an aniline point greater than 200°F (93°C)
(DO NOT USE OILS WITH ADDITIVES, COMPOUNDED OILS CONTAINING SOLVENTS, GRAPHITE, DETERGENTS, OR SYNTHETIC OILS.)

Replacement Kits

Fill Plug Kit – Brass Fill Plug and O-ring PS434
O-ring Repair Kit PS435

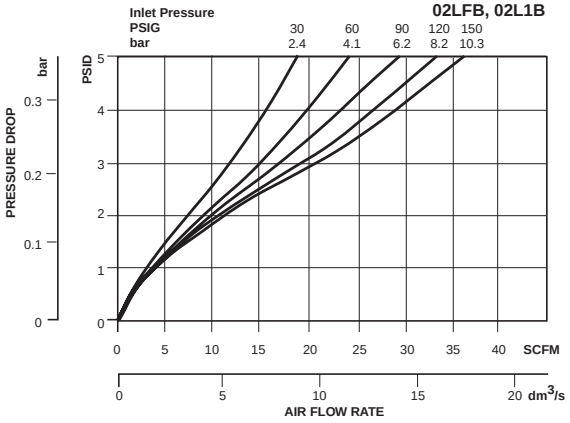

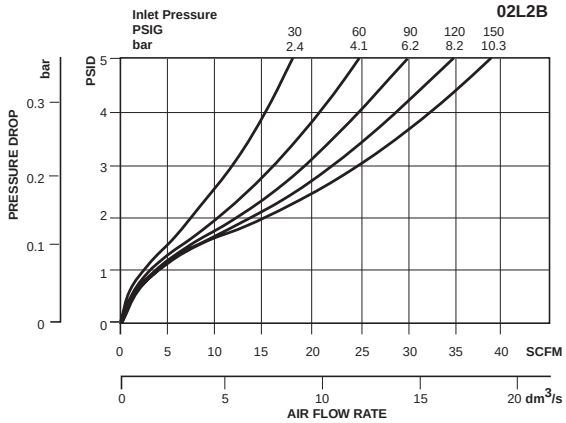

Parker Hannifin Corporation
Pneumatic Division
Richland, Michigan
www.parker.com/pneumatics

04L Mist Lubricators – Miniature

Features

- Proportional oil delivery over a wide range of air flows.
- Precision needle valve assures repeatable oil delivery and provides simple adjustment of delivery rate.
- Ideal for low and high flow applications with changing air flow.
- Transparent sight dome for 360° visibility.
- High Flow: 1/8" – 20 SCFM§
  1/4" – 20 SCFM§

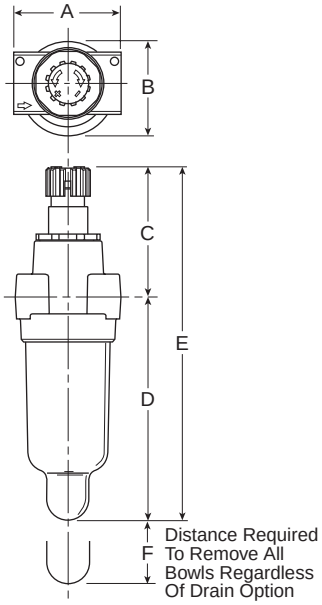

Port Size	NPT	
	Twist Drain	No Drain
Poly Bowl ‡		
1/8"	—	**04L00G***
1/4"	—	**04L10G***
Metal Bowl without Sight Gauge		
1/8"	**04L03G***	—
1/4"	**04L13G***	—

Standard part numbers shown bold. For other models refer to ordering information below.

‡ For polycarbonate bowl and sight dome, see Caution on page C2.

§ SCFM = Standard cubic feet per minute at 90 psig inlet and 5 psig pressure drop.

04L Lubricator Dimensions		
A 1.73 (44)	**B** 1.56 (40)	**C** 2.16 (55)
D 3.64 (92)	**D†** 3.78 (96)	**E** 5.80 (147)
E† 5.94 (151)	**F** 1.60 (41)	

Inches (mm)

† With Twist Drain.

Ordering Information

04L	1	0	G	*	—

Port Size
- **0 1/8 Inch**
- **1 1/4 Inch**

Bowl Options

Polycarbonate Bowl	Metal Bowl
0 Without Drain	**3 Twist Drain**
1 Twist Drain	

Body
- **G Without Tamperproof Cap. No Fill Plug**

Engineering Level
- * Will be Entered at Factory

Port Type
- **Blank NPT**
- 1 BSPP
- 2 BSPT

BOLD ITEMS ARE MOST POPULAR.

Parker Hannifin Corporation
Pneumatic Division
Richland, Michigan
www.parker.com/pneumatics

Technical Information

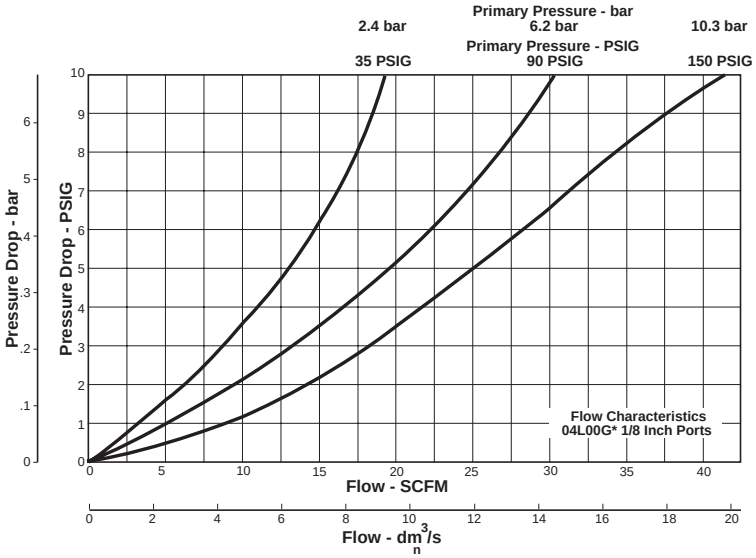

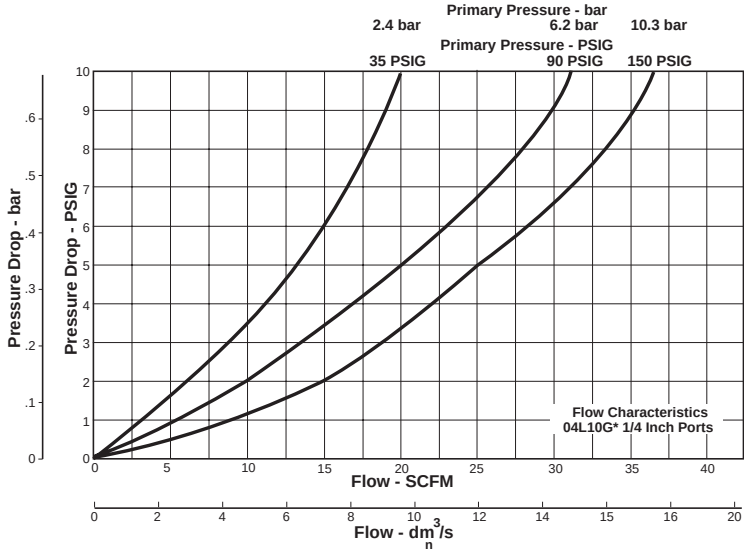

04L Mist Lubricator Kits & Accessories

Bowl Kits –

Poly Bowl – No Drain PS421P
Twist Drain PS420P

Metal Bowl – Twist Drain (No Sight Gauge) PS447BP

Mounting Bracket Kit PS419

Oil – 1 Gal. F442002
12 Quart Case F442003
4 Gallon Case F442005

Specifications

Bowl Capacity ..... 1 Ounce

Minimum Flow for Lubrication ..... 0.5 SCFM at 100 psig

Port Threads ..... 1/8, 1/4 Inch

Pressure & Temperature Ratings –

Polycarbonate Bowl – 0 to 150 psig (0 to 10.3 bar)
32°F to 125°F (0°C to 52°C)

Metal Bowl – 0 to 250 psig (0 to 17.2 bar)
32°F to 175°F (0°C to 80°C)

Suggested Lubricant – ..... F442 Oil

Petroleum based oil of 100 to 200 SSU viscosity at 100°F (38°C) and an aniline point greater than 200°F (93°C).

(DO NOT USE OILS WITH ADDITIVES, COMPOUNDED OILS CONTAINING SOLVENTS, GRAPHITE, DETERGENTS, OR SYNTHETIC OILS.)

Weight ..... 0.4 lb. (0.18 kg)

Materials of Construction

Body ..... Zinc

Bowls – Transparent ..... Polycarbonate
Metal (Without Sight Gauge) ..... Zinc

Drains – Twist – Body & Nut ..... Plastic

Seals ..... Nitrile

Sight Dome ..... Polycarbonate

Parker Hannifin Corporation
Pneumatic Division
Richland, Michigan
www.parker.com/pneumatics

06L Mist Lubricators – Compact

Features

- Proportional oil delivery over a wide range of air flows.
- Precision needle valve assures repeatable oil delivery and provides simple adjustment of delivery rate.
- Bowl can be filled while air line is under pressure.
- Transparent sight dome for 360° visibility.
- High Flow: 1/4" – 40 SCFM§
  3/8" – 60 SCFM§
  1/2" – 90 SCFM§

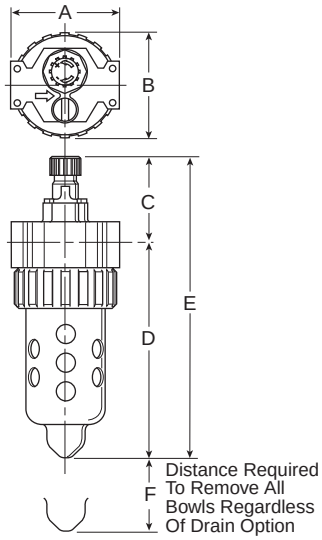

Port Size	NPT	
	Twist Drain	No Drain
Poly Bowl ‡ / Metal Guard		
1/4"	—	**06L12B***
3/8"	—	**06L22B***
1/2"	—	**06L32B***
Metal Bowl / Sight Gauge		
1/4"	**06L14B***	—
3/8"	**06L24B***	—
1/2"	**06L34B***	—

Standard part numbers shown bold. For other models refer to ordering information below.

‡ For polycarbonate bowl and sight dome, see Caution on page C2.

§ SCFM = Standard cubic feet per minute at 90 psig inlet and 5 psig pressure drop.

06L Lubricator Dimensions		
A 2.81 (71)	**B** 2.74 (70)	**C** 2.24 (57)
D 5.58 (142)	**D†** 5.69 (145)	**E** 7.82 (199)
E† 7.93 (201)	**F** 2.25 (57)	

Inches (mm)
†With Twist Drain.

Ordering Information

06L	1	2	B	*	—

Port Size
- **1 1/4 Inch**
- **2 3/8 Inch**
- **3 1/2 Inch**

Bowl Options

Polycarbonate Bowl
- 1 No Drain
- **2 Metal Bowl Guard / No Drain**
- 5 Pressure Fill
- 6 Metal Bowl Guard / Pressure Fill
- J Auto Fill Device
- K Metal Bowl Guard / Auto Fill Device
- R Twist Drain
- N Metal Bowl Guard / Twist Drain

Metal Bowl
- **4 Sight Gauge / Twist Drain**
- 8 Sight Gauge / Pressure Fill
- D Sight Gauge / Liquid Level Sensor
- M Sight Gauge / Auto Fill Device

Options
- **B With Fill Plug**
- C With Fill Plug/Nylon Sight Dome
- F With Body Pressure Fill
- G With Body Pressure Fill / Nylon Sight Dome

Engineering Level
- * Will be Entered at Factory

Port Type

Blank	NPT
1*	BSPP
2	BSPT

* 1/4 & 3/8 inch meet ISO 1179-1 Standard.

BOLD ITEMS ARE MOST POPULAR.

Parker Hannifin Corporation
Pneumatic Division
Richland, Michigan
www.parker.com/pneumatics

Technical Information

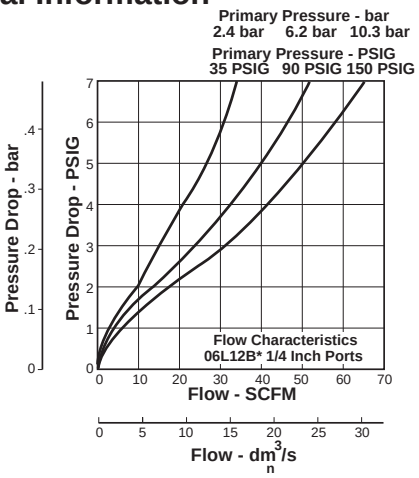

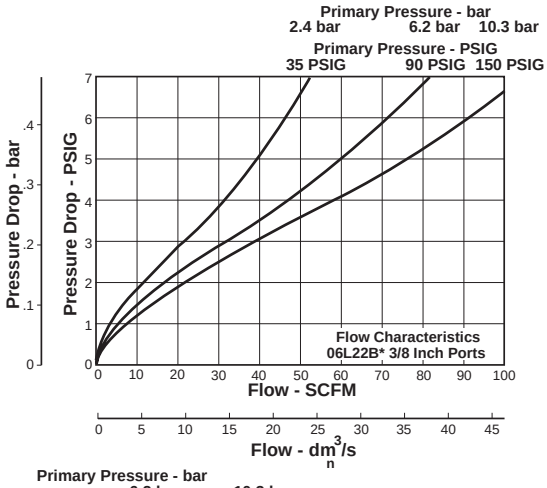

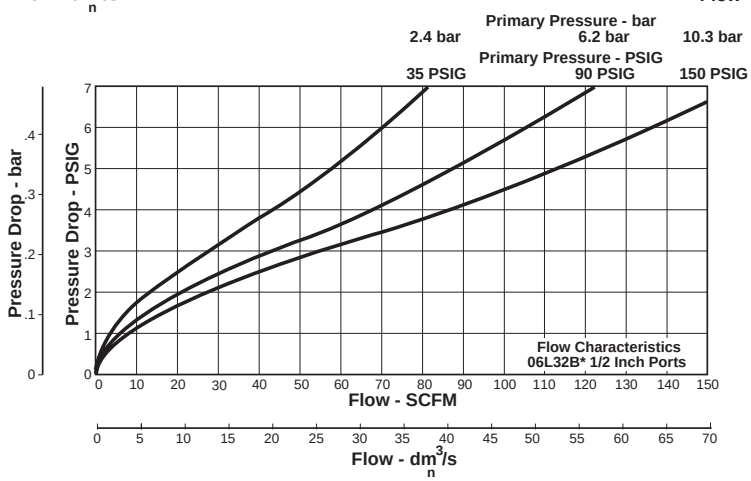

06L Mist Lubricator Kits & Accessories

Adjustment Knob P04121
Bowl Guard Kit PS705P
Bowl Kits –
Poly Bowl – No Drain PS746P
Twist Drain PS717P
Pressure Fill PS719P
Remote Fill PS728P
Metal Bowl – Sight Gauge / Twist Drain PS729P
Sight Gauge / Pressure Fill PS720P
Drain Kit – Twist Drain PS512P
Fill Cap Kit PS741P
Lubricator Service Kit PS718P
Mounting Bracket Kit PS743P
Oil – 1 Gal. F442002
12 Quart Case F442003
4 Gallon Case F442005
Pressure Fill Adapter Kit PS716P
Pressure Fill Button P11912
Remote Auto-Fill Device PS505CP
Sight Dome / Fill Cap Kit PS738P
Sight Dome Kit PS740P
Nylon Sight Dome Kit PS740N

Specifications

Bowl Capacity ..... 2.9 Ounces
Minimum Flow for Lubrication ..... .5 SCFM At 100 psig
Port Threads ..... 1/4, 3/8, 1/2 Inch
Pressure & Temperature Rating –
Polycarbonate Bowl – 0 to 150 psig (0 to 10.3 bar)
32°F to 125°F (0°C to 52°C)
Metal Bowl – 0 to 250 psig (0 to 17.2 bar)
32°F to 175°F (0°C to 80°C)
Suggested Lubricant ..... F442 Oil
Petroleum based oil of 100 to 200 SSU viscosity at 100°F (38°C) and an aniline point greater than 200°F (93°C)
(DO NOT USE OILS WITH ADDITIVES, COMPOUNDED OILS CONTAINING SOLVENTS, GRAPHITE, DETERGENTS, OR SYNTHETIC OILS.)
Weight ..... 1.2 lb. (0.5 kg)

Materials of Construction

Body ..... Zinc
Bowls – Transparent ..... Polycarbonate
Metal (With Sight Gauge) ..... Zinc
Bowl Guard ..... Steel
Collar ..... Plastic
Drain – Twist – Body & Nut ..... Plastic
Injector Meter Block & Base Assembly ..... Plastic
Seals ..... Nitrile
Sight Dome ..... Polycarbonate
Sight Gauge ..... Polyamide (Nylon)

Parker Hannifin Corporation
Pneumatic Division
Richland, Michigan
www.parker.com/pneumatics

07L Mist Lubricators – Standard

Features

- Proportional oil delivery over a wide range of air flows.
- Precision needle valve assures repeatable oil delivery and provides simple adjustment of delivery rate.
- Bowl can be filled while air line is under pressure.
- Transparent sight dome for 360° visibility.
- High Flow: 3/8" – 60 SCFM§
  1/2" – 90 SCFM§
  3/4" – 90 SCFM§

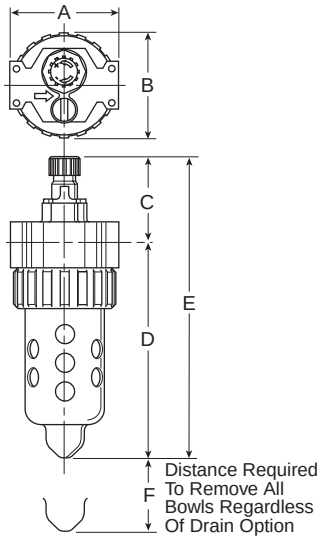

Port Size	NPT	
	Twist Drain	No Drain
Poly Bowl ‡ / Metal Guard		
3/8"	—	**07L22B***
1/2"	—	**07L32B***
3/4"	—	**07L42B***
Metal Bowl / Sight Gauge		
3/8"	**07L24B***	—
1/2"	**07L34B***	—
3/4"	**07L44B***	—

Standard part numbers shown bold. For other models refer to ordering information below.

‡ For polycarbonate bowl and sight dome, see Caution on page C2.

§ SCFM = Standard cubic feet per minute at 90 psig inlet and 5 psig pressure drop.

07L Lubricator Dimensions		
A 3.24 (82)	**B** 3.25 (83)	**C** 2.41 (61)
D 6.86 (174)	**D†** 6.95 (177)	**E** 9.09 (231)
E† 9.35 (237)	**F** 2.75 (70)	

Inches (mm)

† **With Twist Drain.**

Ordering Information

07L	2	2	B	*	—

Port Size

2	**3/8 Inch**
3	**1/2 Inch**
4	**3/4 Inch**

Bowl Options

Polycarbonate Bowl	Metal Bowl
1 No Drain	**4 Sight Gauge / Twist Drain**
2 Metal Bowl Guard / No Drain	8 Sight Gauge / Pressure Fill
5 Pressure Fill	D Sight Gauge / Liquid Level Sensor
6 Metal Bowl Guard / Pressure Fill	M Sight Gauge / Auto Fill Device
J Auto Fill Device	
K Metal Bowl Guard / Auto Fill Device	
R Twist Drain	
N Metal Bowl Guard / Twist Drain	

Options

- **B With Fill Plug**
- C With Fill Plug/Nylon Sight Dome
- F With Body Pressure Fill
- G With Body Pressure Fill / Nylon Sight Dome

Engineering Level

- * Will be Entered at Factory

Port Type

Blank	NPT
1*	BSPP
2	BSPT

* 3/8 & 1/2 inch meet ISO 1179-1 Standard.

BOLD ITEMS ARE MOST POPULAR.

Parker Hannifin Corporation
Pneumatic Division
Richland, Michigan
www.parker.com/pneumatics

Technical Information

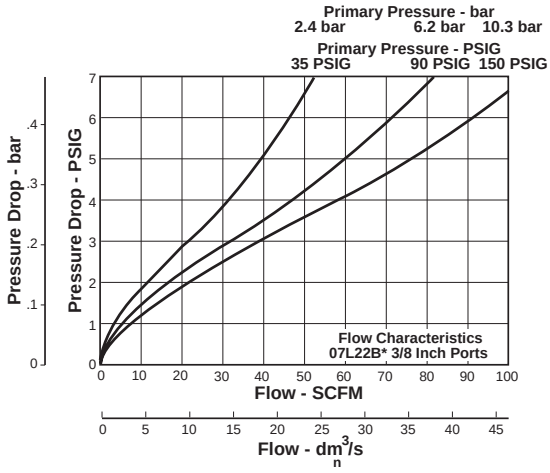

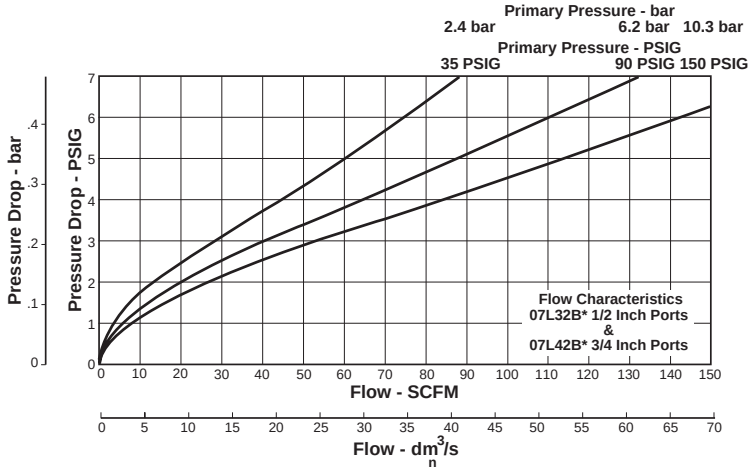

07L Mist Lubricator Kits & Accessories

Adjustment Knob P04121
Bowl Guard Kit PS805P
Bowl Kits –
Poly Bowl – No Drain PS846P
Twist Drain PS817P
Pressure Fill PS819P
Remote Fill PS828P
Metal Bowl – Sight Gauge / Twist Drain PS829P
Sight Gauge / Pressure Fill PS820P
Drain Kit – Twist Drain PS512P
Fill Cap Kit PS741P
Lubricator Service Kit PS718P
Mounting Bracket Kit PS843P
Oil – 1 Gal. F442002
12 Quart Case F442003
4 Gallon Case F442005
Pressure Fill Adapter Kit PS716P
Pressure Fill Button P11912
Remote Auto-Fill Device PS505CP
Sight Dome / Fill Cap Kit PS738P
Sight Dome Kit PS740P
Nylon Sight Dome Kit PS740N

Specifications

Bowl Capacity ..... 6.0 Ounces
Minimum Flow for Lubrication ..... .5 SCFM At 100 psig
Port Threads ..... 3/8, 1/2, 3/4 Inch
Pressure & Temperature Rating –
Polycarbonate Bowl – 0 to 150 psig (0 to 10.3 bar)
32°F to 125°F (0°C to 52°C)
Metal Bowl – 0 to 250 psig (0 to 17.2 bar)
32°F to 175°F (0°C to 80°C)
Suggested Lubricant ..... F442 Oil
Petroleum based oil of 100 to 200 SSU viscosity at 100°F (38°C) and an aniline point greater than 200°F (93°C).
(DO NOT USE OILS WITH ADDITIVES, COMPOUNDED OILS CONTAINING SOLVENTS, GRAPHITE, DETERGENTS, OR SYNTHETIC OILS.)
Weight ..... 1.9 lb. (0.9 kg)

Materials of Construction

Body ..... Zinc
Bowls – Transparent ..... Polycarbonate
Metal (With Sight Gauge) ..... Zinc
Bowl Guard ..... Steel
Collar ..... Plastic or Metal
Drain – Twist – Body & Nut ..... Plastic
Injector Meter Block & Base Assembly ..... Plastic
Seals ..... Nitrile
Sight Dome ..... Polycarbonate
Sight Gauge ..... Polyamide (Nylon)

Parker Hannifin Corporation
Pneumatic Division
Richland, Michigan
www.parker.com/pneumatics

P3NL Mist Lubricators – Hi-Flow

Features

- Port blocks (PB) available to provide 1-1/2" port extension to 1" ported bodies.
- Proportional oil delivery over a wide range of air flows.
- Bowl can be filled while air line is under pressure.
- Transparent sight dome for 360° visibility.
- High Flow: 3/4" – 240 SCFM§
  1" – 250 SCFM§
  1-1/2" – 260 SCFM§

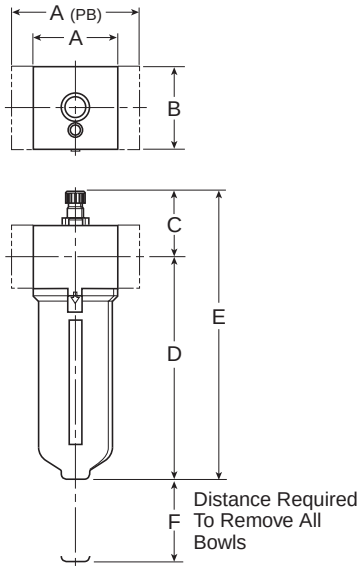

Port Size	NPT
	No Drain
Metal Bowl / Sight Gauge	
3/4"	**P3NLA96LSN**
1"	**P3NLA98LSN**
1-1/2"#	**P3NLA9PLSN**

Standard part numbers shown bold. For other models refer to ordering information below

1" Port Body with 1-1/2" Port Block.

§ SCFM = Standard cubic feet per minute at 90 psig inlet and 5 psig pressure drop.

P3NL Lubricator Dimensions		
A 3.62 (92)	**APB** 5.91 (150)	**B** 3.62 (92)
C 2.81 (71)	**D** 9.00 (229)	**E** 11.81 (300)
F 4.92 (125)		

Inches (mm)

Ordering Information

P3N	L	A	9	8	L	S	N

Design Level

Port Type
- 1* G Thread (BSPP) Female
- 2 Rc Thread (BSPT) Female
- **9 NPT Female**

* 3/4 & 1 inch meet ISO 1179-1 Standard.

Port Size
- **6 3/4" (w/o Port Blocks)**
- **8 1" (w/o Port Blocks)**
- **P 1-1/2" Port Blocks (w/ 1" Ported Body)**

Type
- **Oil Mist**
- **L w/ Polycarbonate Sight Dome**
- A w/ Nylon Sight Dome

Bowl
- **S Metal Bowl w/ Sight Gauge**

Drain / Fill Device
- A Auto Fill / Fill Plug
- **N No Drain, Solid Bowl / Fill Plug**
- M Twist Drain / Fill Plug
- H No Drain / Body Pressure Fill
- J Twist Drain / Body Pressure Fill

BOLD ITEMS ARE MOST POPULAR.

Parker Hannifin Corporation
Pneumatic Division
Richland, Michigan
www.parker.com/pneumatics

Technical Information

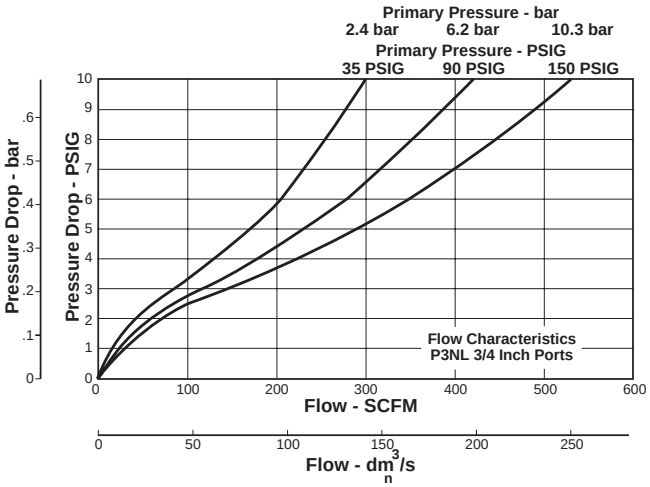

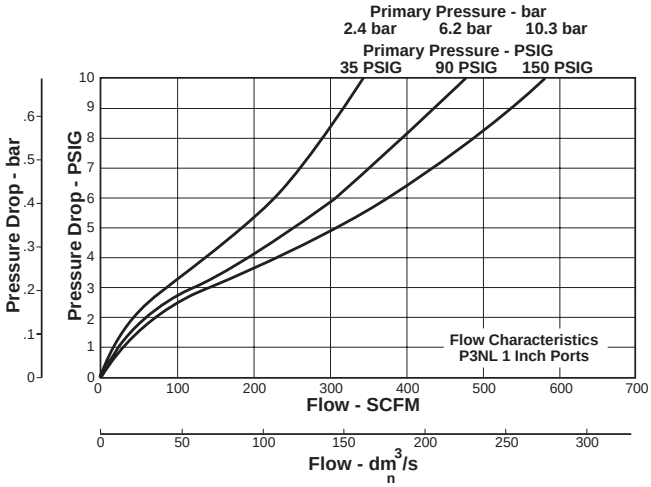

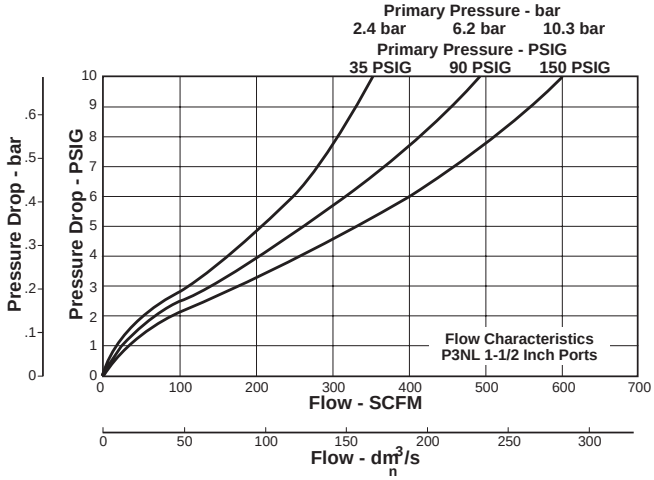

P3NL Lubricator Kits & Accessories

Adjustment Knob P04121

Bowl Kits –
Metal Bowl – Sight Gauge / Twist Drain P3NKA00BSM
Metal Bowl – Sight Gauge / No Drain P3NKA00BSN

Bowl Latch Kit C11A33

Drain Kit – Twist Drain PS512P

Fill Cap Kit P3NKA00PL

Sight Dome Kit – Polycarbonate PS740P
Nylon PS740N

Sight Gauge Kit P3NKA00PE

Pressure Fill Adapter Kit P3NKA00PK

Service Kit P3NKA00RL

Mounting Bracket Kit* P3NKA00MW

Oil – 1 Gal. F442002
12 Quart Case F442003
4 Gallon Case F442005

* If 1-1/2 BSPP E02 fittings are required, use P3NKA0BMW.

Specifications

Bowl Capacity ..... 18.0 Ounces

Minimum Flow for Lubrication ..... 6.6 SCFM at 100 psig

Pressure & Temperature Rating ..... 0 to 250 psig (0 to 17.2 bar)
32°F to 175°F (0°C to 80°C)

Suggested Lubricant ..... F442 Oil

Petroleum based oil of 100 to 200 SSU viscosity at 100°F (38°C) and an aniline point greater than 200°F (93°C).

(DO NOT USE OILS WITH ADDITIVES, COMPOUNDED OILS CONTAINING SOLVENTS, GRAPHITE, DETERGENTS, OR SYNTHETIC OILS.)

Weight – 3/4 Inch ..... 3.5 lb. (1.6 kg)
1 Inch ..... 3.5 lb. (1.6 kg)
1-1/2 Inch† ..... 4.6 lb. (2.1 kg)

Materials of Construction

Body, Bowl ..... Aluminum

Drains: Twist Drain (Optional) ..... Plastic

Injector Meter Block & Base Assembly ..... Plastic

Seals ..... Nitrile

Sight Dome ..... Polycarbonate

Sight Gauge ..... Polyamide (Nylon)

† 1" Port Body with 1-1/2" Port Block.

Parker Hannifin Corporation
Pneumatic Division
Richland, Michigan
www.parker.com/pneumatics

L606 Standard Lubricators

Features

- Metal Bowl with Sight Gauge - Standard
- Polycarbonate Sight Dome
- Bowl can be Filled while Air Line is Under Pressure
- Proportional Oil Delivery Over a Wide Range of Air Flows
- Large Capacity Bowl
- Optional High Capacity Bowl(s) Available
- Precision Needle Valve Assures Repeatable Oil Delivery and Provides Simple Adjustment of Delivery Rate
- High Flow: 3/4" - 325 SCFM§
  1" - 350 SCFM§

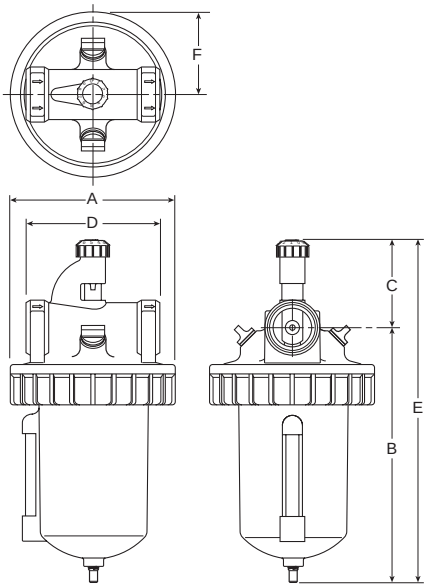

Port Size	NPT No Drain	BSPP No Drain
Zinc Bowl / Sight Gauge		
3/4"	**L606-06W**	L606G06W
1"	**L606-08W**	L606G08W
Aluminum Bowl 32 oz. without Sight Gauge		
3/4"	**L606-06E**	L606G06E
1"	**L606-08E**	L606G08E
Aluminum Bowl 64 oz. with Sight Gauge		
3/4"	**L606-06G**	L606G06G
1"	**L606-08G**	L606G08G

Bold Items are Most Popular.
For other models refer to ordering information below.

§ SCFM = Standard cubic feet per minute at 100 psig inlet, and 5 psig pressure drop.

L606 Lubricator Dimensions					
A	**B**	**C**	**D**	**E**	**F**
L606-06W, L606-08W					
4.97 (126)	7.25 (184)	2.63 (66.7)	4.06 (103)	9.88 (251)	2.48 (63.1)
L606-06E, L606-08E					
4.97 (126)	10.75 (273)	2.63 (66.7)	4.06 (103)	13.38 (340)	2.48 (63.1)
L606-06G, L606-08G					
5.00 (127)	9.40 (239)	2.62 (66)	4.06 (103)	12.02 (305)	2.50 (64)

inches
(mm)

Ordering Information

L	606	—	06	W		/**

Port Threads	
—	**NPT**
G	BSPP

Port Size	
06	**3/4 Inch**
08	**1 Inch**

Bowl			
Bowl	**Capacity**	**Description**	**Size**
E	32 oz.	Large Capacity without Sight Gauge with Drain	3/4" & 1"
G	64 oz.	Large Capacity with Sight Gauge	3/4" & 1"
W	**16 oz.**	**Metal with Sight Gauge & Drain**	**3/4" & 1"**

Options	
Blank	**None**
H	Button Head Fill Fitting
X9*	Manual Twist Drain (Increases Product Length by 9/16 Inch)

* Standard with "E" & "W" Bowl. Optional with "G" Bowl.

Engineering Change Designator
Will be entered at factory.

BOLD ITEMS ARE MOST POPULAR.

Parker Hannifin Corporation
Pneumatic Division
Richland, Michigan
www.parker.com/pneumatics

Technical Information

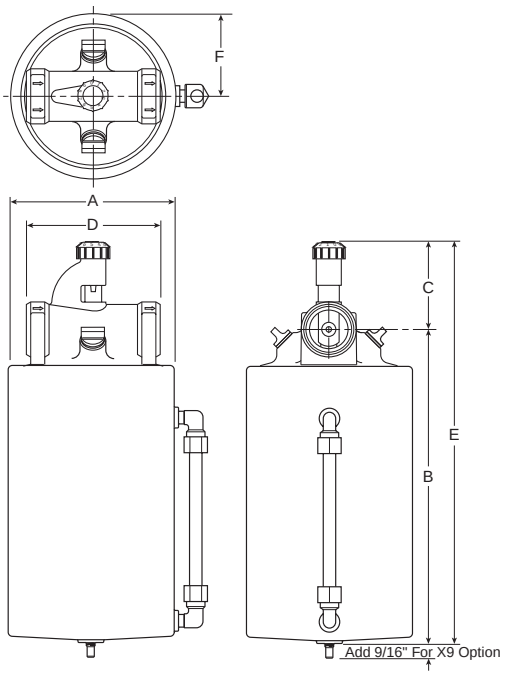

L606-08G

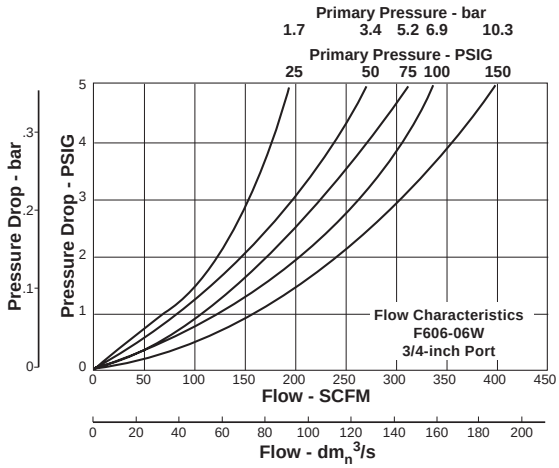

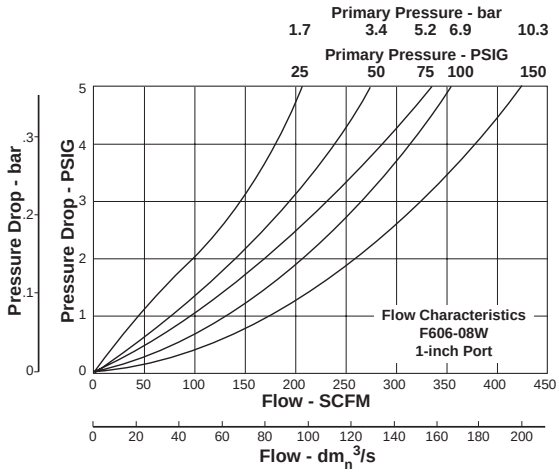

L606 Lubricator Kits & Accessories

Adjusting Knob 606Y72

Bowl Kits –
- Aluminum (E) BK603B
- Aluminum with Sight Gauge (G) BK606X30B
- Zinc with Sight Gauge (W) BK609WB

Button Head Fill Fitting (M14 male thread) L606C14

Dip Tube Kit DTK606

Drip Spout Kit RK606SY

Mounting Bracket –
- 3/4 Inch units (2 required per unit) SA200AW57
- 1 Inch units (2 required per unit) SA200CW57

Oil – 1 Gal. F442002
- 12 Quart Case F442003
- 4 Gallon Case F442005

Repair Kits –
- Needle Valve Assembly (All) RK606Y
- Sight Gauge Bowl Repair Kit (W) RKB605WB
- Sight Gauge Bowl Repair Kit (G) RKB606X30B

Specifications

Bowl Capacity –
- Aluminum (E) ..... 32 Ounces
- Aluminum with Polycarbonate Sight Gauge (G) ..... 64 Ounces
- Zinc with Nylon Sight Gauge (W) ..... 16 Ounces

Port Threads ..... 3/4, 1 Inch

Pressure & Temperature Ratings –
- Aluminum Bowl (E) ..... 0 to 300 psig (0 to 20.4 bar)
  40°F to 150°F (4.4°C to 65.6°C)
- Aluminum Bowl with Polycarbonate Sight Gauge (G) ..... 0 to 150 psig (0 to 10.2 bar)
  40°F to 125°F (4.4°C to 52°C)
- Zinc Bowl with Nylon Sight Gauge (W) ..... 0 to 250 psig (0 to 17.2 bar)
  40°F to 150°F (4.4°C to 65.6°C)

Weight –
- Aluminum Bowl (E) ..... 5.5 lb. (2.49 kg) / Unit
  22.3 lb. (10.12 kg) / 4-Unit Master Pack
- Aluminum Bowl with Polycarbonate Sight Gauge (G) ..... 7.2 lb. (3.27 kg) / Unit
  28.8 lb. (13.06 kg) / 4-Unit Master Pack
- Zinc Bowl with Nylon Sight Gauge (W) ..... 4.2 lb. (1.91 kg) / Unit
  16.6 lb. (7.53 kg) / 4-Unit Master Pack

Suggested Lubricant ..... F442 Oil

Petroleum based oil of 100 to 200 SSU viscosity at 100°F (38°C) and an aniline point greater than 200°F (93°C).

(DO NOT USE OILS WITH ADDITIVES, COMPOUNDED OILS CONTAINING SOLVENTS, GRAPHITE, DETERGENTS, OR SYNTHETIC OILS.)

Materials of Construction

Body ..... Zinc

Bowls –
- (E) ..... Aluminum
- (G) ..... Aluminum with Polycarbonate Sight Gauge
- (W) ..... Zinc with Nylon Sight Gauge

Seals ..... Buna N

Parker Hannifin Corporation
Pneumatic Division
Richland, Michigan
www.parker.com/pneumatics

L606 Standard Lubricators

Features

- Metal Bowl with Sight Gauge - Standard
- Polycarbonate Sight Dome
- Bowl can be Filled while Air Line is Under Pressure
- Proportional Oil Delivery Over a Wide Range of Air Flows
- Large Capacity Bowl
- Optional High Capacity Bowl(s) Available
- Precision Needle Valve Assures Repeatable Oil Delivery and Provides Simple Adjustment of Delivery Rate
- High Flow: 1-1/4" - 325 SCFM§
  1-1/2" - 400 SCFM§

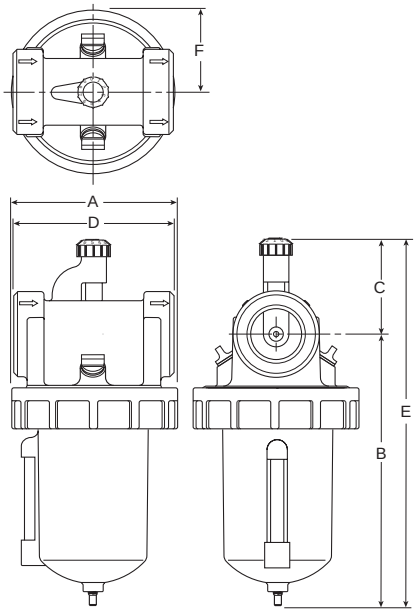

Port Size	NPT No Drain	BSPP No Drain
Zinc Bowl / Sight Gauge		
1-1/4"	**L606-10W**	L606G10W
1-1/2"	**L606-12W**	L606G12W
Aluminum Bowl 32 oz. without Sight Gauge		
1-1/4"	**L606-10E**	L606G10E
1-1/2"	**L606-12E**	L606G12E
Aluminum Bowl 64 oz. with Sight Gauge		
1-1/4"	**L606-10G**	L606G10G
1-1/2"	**L606-12G**	L606G12G

Bold Items are Most Popular.
For other models refer to ordering information below.

§ SCFM = Standard cubic feet per minute at 100 psig inlet, and 5 psig pressure drop.

L606 Lubricator Dimensions					
A	**B**	**C**	**D**	**E**	**F**
L606-10W, L606-12W					
4.97 (126)	7.63 (194)	2.84 (72.2)	4.81 (122)	10.47 (266)	2.48 (63.1)
L606-10E, L606-12E					
4.97 (126)	11.13 (283)	2.84 (72.2)	4.81 (122)	13.97 (255)	2.48 (63.1)
L606-10G, L606-12G					
5.00 (127)	7.99 (203)	2.84 (72.2)	4.81 (122)	12.80 (325)	2.50 (64)

inches
(mm)

Ordering Information

L	606	—	10	W		/**

Port Threads

—	**NPT**
G	BSPP

Port Size

10	**1-1/4 Inch**
12	**1-1/2 Inch**

Bowl

Bowl	Capacity	Description	Size
E	32 oz.	Large Capacity without Sight Gauge with Drain	1-1/4" & 1-1/2"
G	64 oz.	Large Capacity with Sight Gauge	1-1/4" & 1-1/2"
W	**16 oz.**	**Metal with Sight Gauge & Drain**	**1-1/4" & 1-1/2"**

Options

Blank	**None**
H	Button Head Fill Fitting
X9*	Manual Twist Drain (Increases Product Length by 9/16 Inch)

* Standard with "E" & "W" Bowl.
Optional with "G" Bowl.

Engineering Change Designator

Will be entered at factory.

BOLD ITEMS ARE MOST POPULAR.

Parker Hannifin Corporation
Pneumatic Division
Richland, Michigan
www.parker.com/pneumatics

Technical Information

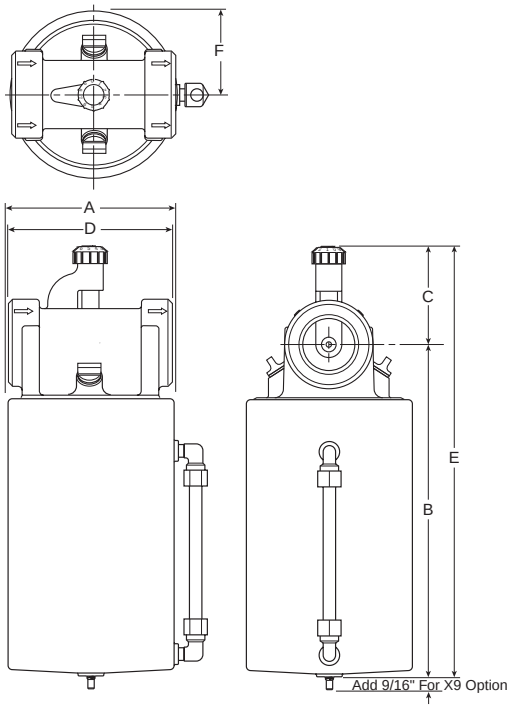

L606-12G

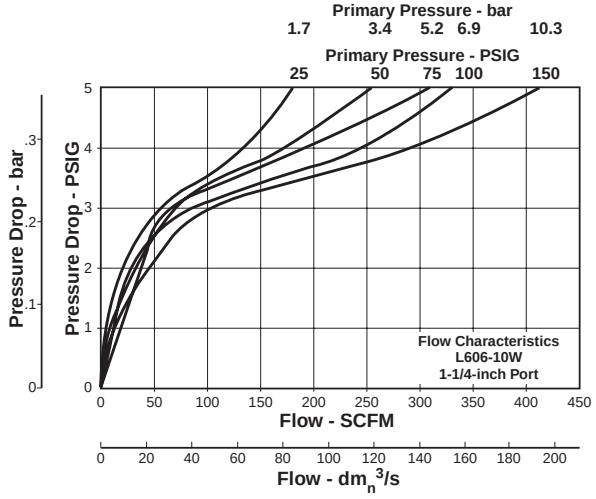

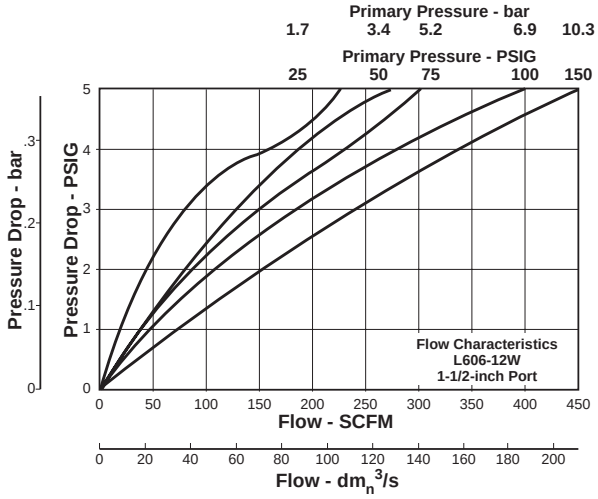

L606 Lubricator Kits & Accessories

Adjusting Knob 606Y72

Bowl Kits –
- Aluminum (E) BK603B
- Aluminum with Sight Gauge (G) BK606X30B
- Zinc with Sight Gauge (W) BK609WB

Button Head Fill Fitting (M14 male thread) L606C14

Dip Tube Kit DTK606

Drip Spout Kit RK606SY

Oil – 1 Gal. F442002
- 12 Quart Case F442003
- 4 Gallon Case F442005

Repair Kits –
- Needle Valve Assembly (All) RK606Y
- Sight Gauge Bowl Repair Kit (W) RKB605WB
- Sight Gauge Bowl Repair Kit (G) RKB606X30B

Specifications

Bowl Capacity –
- Aluminum (E) ..... 32 Ounces
- Aluminum with Polycarbonate Sight Gauge (G) ..... 64 Ounces
- Zinc with Nylon Sight Gauge (W) ..... 16 Ounces

Port Threads ..... 1-1/4, 1-1/2 Inch

Pressure & Temperature Ratings –
- Aluminum Bowl (E) ..... 0 to 300 psig (0 to 20.4 bar) 40°F to 150°F (4.4°C to 65.6°C)
- Aluminum Bowl with Polycarbonate Sight Gauge (G) ..... 0 to 150 psig (0 to 10.2 bar) 40°F to 125°F (4.4°C to 52°C)
- Zinc Bowl with Nylon Sight Gauge (W) ..... 0 to 250 psig (0 to 17.2 bar) 40°F to 150°F (4.4°C to 65.6°C)

Weight –
- Aluminum Bowl (E) ..... 8.3 lb. (3.76 kg) / Unit 33.2 lb. (15.06 kg) / 4-Unit Master Pack
- Aluminum Bowl with Polycarbonate Sight Gauge (G) ..... 10 lb. (4.54 kg) / Unit 40 lb. (18.14 kg) / 4-Unit Master Pack Zinc Bowl with Nylon Sight Gauge (W) ..... 7.5 lb. (3.40 kg) / Unit 28.2 lb. (12.79 kg) / 4-Unit Master Pack

Suggested Lubricant ..... F442 Oil

Petroleum based oil of 100 to 200 SSU viscosity at 100°F (38°C) and an aniline point greater than 200°F (93°C).

(DO NOT USE OILS WITH ADDITIVES, COMPOUNDED OILS CONTAINING SOLVENTS, GRAPHITE, DETERGENTS, OR SYNTHETIC OILS.)

Materials of Construction

Body ..... Zinc

Bowls –
- (E) ..... Aluminum
- (G) ..... Aluminum with Polycarbonate Sight Gauge
- (W) ..... Zinc with Nylon Sight Gauge

Seals ..... Buna N

Parker Hannifin Corporation
Pneumatic Division
Richland, Michigan
www.parker.com/pneumatics

09L Mist Lubricators – Hi-Flow

Features

- Metal bowl with sight gauge and manual drain – standard.
- Transparent sight dome for 360° visibility.
- Bowl can be filled while air line is under pressure.
- Proportional oil delivery over a wide range of air flows.
- High Flow: 1000 – SCFM §

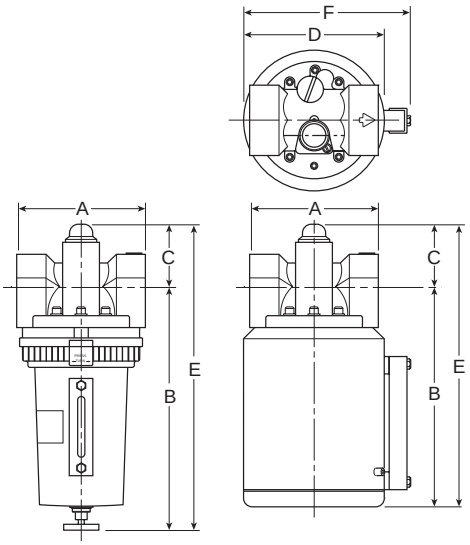

Port Size	NPT
Metal Bowl / Sight Gauge – 1 Quart	
2"	**09L84B***
Metal Bowl / Sight Gauge – 3 Quart	
2"	**09L8PB***

Standard part numbers shown bold. For other models refer to ordering information below.

§ SCFM = Standard Cubic Feet Per Minute at 900 psig Inlet, and 5 psig Pressure Drop.

09L Lubricator Dimensions						
1 Qt.	**A**	**B**	**C**	**D**	**E**	**F**
	5.50 (140)	10.40 (264)	2.64 (67)	—	13.04 (331)	—
3 Qt.	**A**	**B**	**C**	**D**	**E**	
	5.50 (140)	9.44 (240)	2.64 (67)	6.00 (152)	12.08 (307)	7.12 (181)

Inches (mm)

Ordering Information

09L	8	4	B	*	—

Port Size
- **8 2 Inch**

Bowl Options
- Metal Bowl
- **4 1 Quart Sight Gauge / Manual Drain**
- P 3 Quart Sight Gauge / Manual Drain

Options
- **B Without Tamperproof Cap**

Engineering Level
- * Will be Entered at Factory

Port Type
- **Blank NPT**

BOLD ITEMS ARE MOST POPULAR.

Parker Hannifin Corporation
Pneumatic Division
Richland, Michigan
www.parker.com/pneumatics

Technical Information

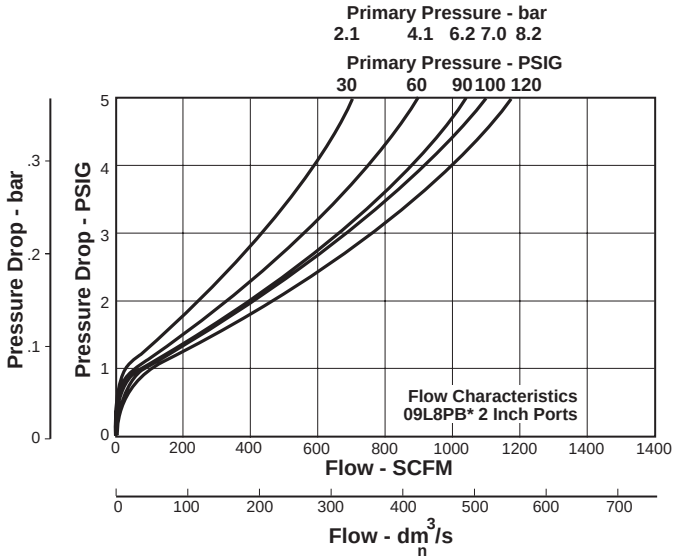

09L Lubricator Kits & Accessories

Fill Cap Kit PS610P

Lubricator Service Kit PS607P

Metal Bowl – Sight Gauge / Twist Drain PS612P*

Oil – 1 Gal. F442002
12 Quart Case F442003
4 Gallon Case F442005

Sight Dome Kit PS613P

* 1 Quart Bowl

Specifications

Bowl Capacity ..... 1 Qt. (Standard)
3 Qt. (Optional)

Bowl ..... Metal with Sight Gauge

Drain ..... Manual Twist Drain

Port Threads ..... 2 Inch

Pressure & Temperature Rating ..... 0 to 150 psig (0 to 10.3 bar)
32°F to 150°F (0°C to 66°C)

Suggested Lubricant ..... F442 Oil

Petroleum based oil of 100 to 200 SSU viscosity at 100°F (38°C) and an aniline point greater than 200°F (93°C).

(DO NOT USE OILS WITH ADDITIVES, COMPOUNDED OILS CONTAINING SOLVENTS, GRAPHITE, DETERGENTS, OR SYNTHETIC OILS.)

Weight –1 Qt. ..... 10.2 lb. (4.6 kg)
3 Qt. ..... 13.7 lb. (6.2 kg)

Materials of Construction

Body ..... Zinc Alloy, Die Cast

Parker Hannifin Corporation
Pneumatic Division
Richland, Michigan
www.parker.com/pneumatics

Remote Auto-Fill Device

Features

- Wide operating range (oil supply to inlet may be 30 to 270 psig; air operating pressure depends on bowl used).
- Rugged polyurethane float design.
- Complete field conversion kit.
- Adaptable on polycarbonate and metal bowls already in service.
- Oil supply strainer standard.
- Fits 06L / 16L and 07L / 17L Series.

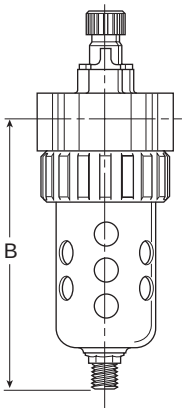

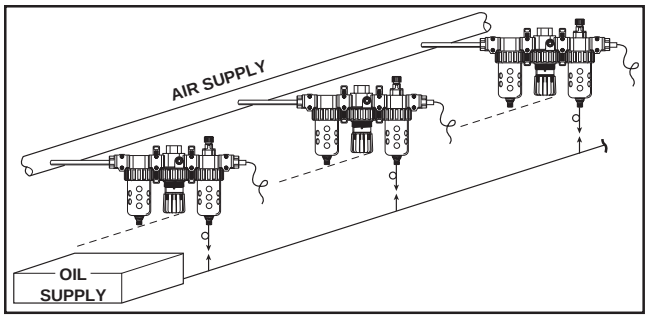

Dimensions

Model	Kit Number	B
06L-16L	PS505CP	5.36 (136)
07L-17L	PS505CP	6.71 (170)

Inches (mm)

Operation

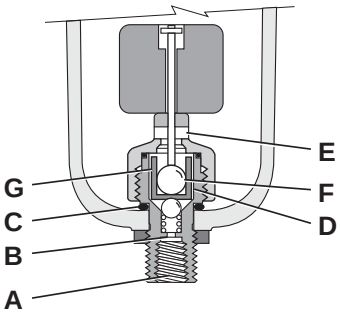

Oil enters the unit at the pipe thread fitting **(A)** with a supply pressure that is a minimum of 20 psig above the lubricator air pressure. With the float lowered, oil flows through metering orifice **(B)** and lifts the check ball **(C)**. Oil continues to flow past the shuttle chamber annulus **(D)** and out the cross drilled hole **(E)**. As the oil level rises, it cause the float to rise to its maximum level in the bowl. During this period the shut-off ball **(F)** remains in chamber **(G)**, out of the flow stream. Near the end of the filling period, shut-off ball **(F)** will enter the flow stream and snap shut against the seat in chamber **(G)**.

The stem assembly will thus block any additional oil passage as long as the oil supply pressure is maintained at **(A)**. When the supply pressure at **(A)** is released, ball **(C)** is held up against the shuttle **(D)** by a spring causing a slight delay in reverse flow shut-off. This permits the higher still present supply pressure in chamber **(G)** to dissipate and bowl pressure to take over. The shuttle then moves down forcing ball **(C)** to close orifice **(B)**. The orifice will remain closed as long as there is air pressure in the bowl.

This delay of reverse flow in chamber **(G)** is necessary to allow shut-off ball **(F)** to fall when the oil level decreases and permit oil to enter the bowl for the next refill. Thus, for the unit to operate properly, it is necessary that the oil supply pressure go to zero after each fill.

Specifications

Bowl Capacity ..... 4.9 Ounces
Minimum Flow for Lubrication ..... 1 SCFM At 100 psig
Port Threads ..... 3/8, 1/2, 3/4 Inch
Pressure & Temperature Rating –
Polycarbonate Bowl – 0 to 150 psig (0 to 10.3 bar)
32°F to 125°F (0°C to 52°C)
Metal Bowl / Sight Gauge – 0 to 250 psig (0 to 17.2 bar)
32°F to 175°F (0°C to 80°C)

Oil inlet pressure must be at least 20 psig above system air pressure and may be up to 300 psig.

Suggested Lubricant ..... F442 Oil
Petroleum based oil of 100 to 200 SSU viscosity at 100°F (38°C) and an aniline point greater than 200°F (93°C).

(DO NOT USE OILS WITH ADDITIVES, COMPOUNDED OILS CONTAINING SOLVENTS, GRAPHITE, DETERGENTS, OR SYNTHETIC OILS.)

Flexible tubing is recommended for oil supply line connection to remote fill inlet. Rigid piping should be avoided to prevent possible damage due to stresses on the lubricator bowl assembly.
Oil supply line should be pressurized for 2 to 15 minutes one or more times per day. Pressurization frequently should be based on maintaining oil in lubricator at its highest level.

Weight ..... 1.9 lb. (0.9 kg)

Materials of Construction

Body, Cap & Stem ..... Aluminum
Float ..... Polyurethane
Mounting Nut ..... Delrin
Seals ..... Nitrile
Spring ..... Stainless

Parker Hannifin Corporation
Pneumatic Division
Richland, Michigan
www.parker.com/pneumatics

Notes

Parker Hannifin Corporation
Pneumatic Division
Richland, Michigan
www.parker.com/pneumatics

Close Nippled Combinations – 14 Miniature Series

- See individual component pages for details.

Two-Unit Combo

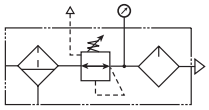

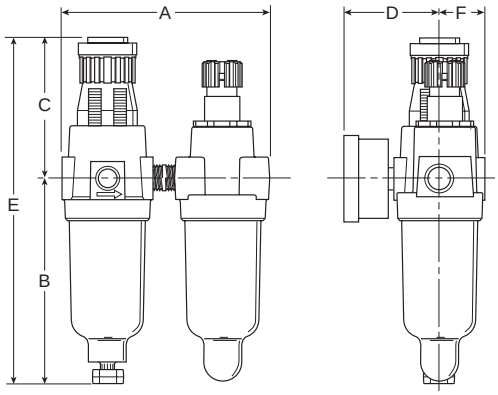

Series	Port	Model Numbers
14G	1/8"	**14G01B13F0G***
	1/4"	**14G11B13F0G***

For other models, refer to ordering information on next page.

A	B	C	D	E	F
3.75 (95)	3.79 (96)	2.42 (61)	2.04 (52)	6.21 (158)	0.79 (20)

Inches (mm)
Note: All dimensions nominal.

- Regulator can be mounted with knob in up or down position.

Three-Unit Combo

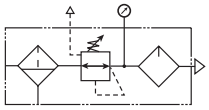

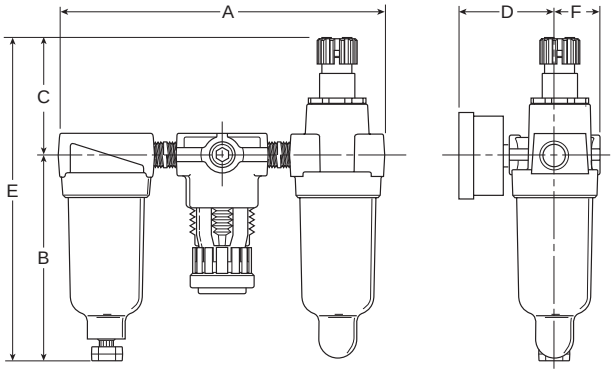

Series	Port	Model Numbers
14A	1/8"	**14A01B13F0G***
	1/4"	**14A11B13F0G***

For other models, refer to ordering information on next page.

A	B	C	D	E	F
5.77 (147)	3.82 (97)	2.16 (55)	2.04 (52)	5.98 (152)	0.79 (20)

Inches (mm)
Note: All dimensions nominal.

Parker Hannifin Corporation
Pneumatic Division
Richland, Michigan
www.parker.com/pneumatics

Close Nippled Combinations – 14 Miniature Series

Ordering Information

14A	1	1	B	13	F	0	G	*

Series
- **14A 3-Unit**
- **14G 2-Unit**

Port Size
- **0 1/8 Inch**
- **1 1/4 Inch**

Filter Bowl Options

Poly Bowl
- **1 Twist Drain**
- 5 Automatic Pulse Drain

Metal Bowl
- 3 Twist Drain
- 7 Automatic Pulse Drain

Regulator Pressure

Without Gauge
- 10 30 psig
- 11 60 psig
- 12 15 psig
- **13 125 psig**

With Gauge
- 15 30 psig
- 16 60 psig
- 17 15 psig
- 18 125 psig

Filter Element
- A 40 Micron
- **B 5 Micron**

Relief
- **F Relieving**
- G Non-Relieving

Lubricator Bowl Options

Poly Bowl
- **0 No Drain**
- 1 Twist Drain

Metal Bowl
- 3 Twist Drain

Lubricator Body Options
- **G No Fill Plug**

Engineering Level
- * Will be Entered at Factory

NOTE: BOLD OPTIONS ARE STANDARD.

CAUTION:

REGULATOR PRESSURE ADJUSTMENT – The working range of knob adjustment is designed to permit outlet pressures within their full range. Pressure adjustment beyond this range is also possible because the knob is not a limiting device. This is a common characteristic of most industrial regulators, and limiting devices may be obtained only by special design.

For best performance, regulated pressure should always be set by increasing the pressure up to the desired setting.

⚠ WARNING

Product rupture can cause serious injury.
Do not connect regulator to bottled gas.
Do not exceed maximum primary pressure rating.

For polycarbonate bowl and sight dome, see Caution on page C2.

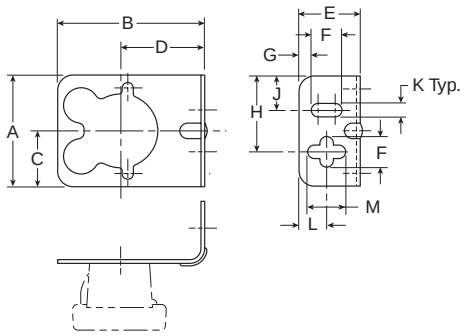

PS417BP
(Includes Panel Mount Nut)

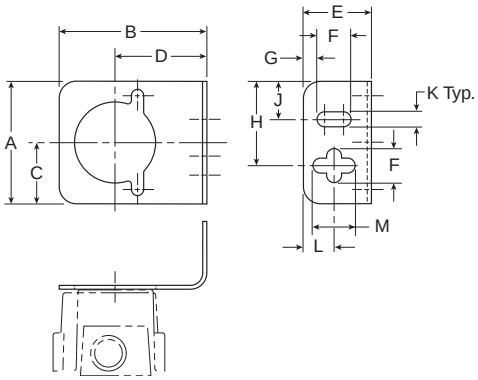

PS419

Dimensions

A	B	C	D	E	F	G	H	J	K	L	M	Kit
1.80 (46)	2.37 (60)	0.90 (23)	1.35 (34)	1.00 (25)	0.50 (13)	0.20 (5)	1.24 (31)	0.56 (14)	0.22 (6)	0.45 (11)	0.62 (16)	**PS417BP** (10F, 14F, P3A, 14R, 14E)
1.80 (46)	2.17 (55)	0.90 (23)	1.35 (34)	1.00 (25)	0.50 (13)	0.20 (5)	1.24 (31)	0.56 (14)	0.22 (6)	0.45 (11)	0.62 (16)	**PS419** (04L)

Inches (mm)

Parker Hannifin Corporation
Pneumatic Division
Richland, Michigan
www.parker.com/pneumatics

Close Nippled Combinations – 05 Economy Series

- Regulator can be mounted with knob in up or down position.
- See individual component pages for details.

Two-Unit Combo

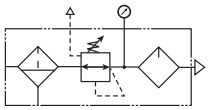

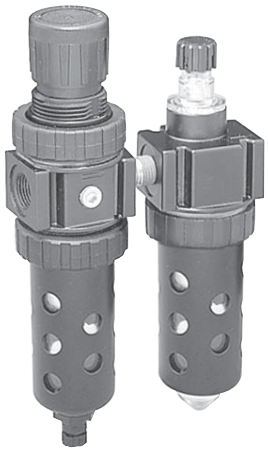

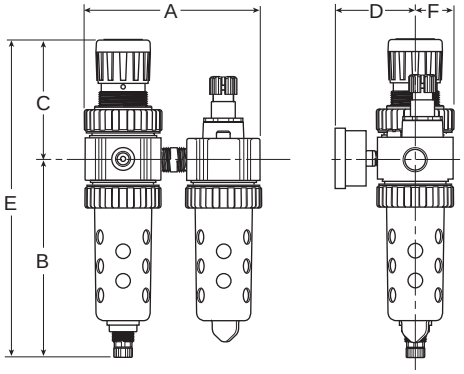

Series	Port	Model Numbers
15G	1/4"	**15G12A13A2N***
	3/8"	**15G22A13A2N***

For other models, refer to ordering information on next page.

A	B	C	D	E	F
4.49 (114)	5.35 (136)	3.16 (80)	2.05 (52)	8.50 (216)	1.03 (26)

Inches (mm)
Note: All dimensions nominal.

Three-Unit Combo

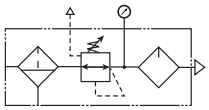

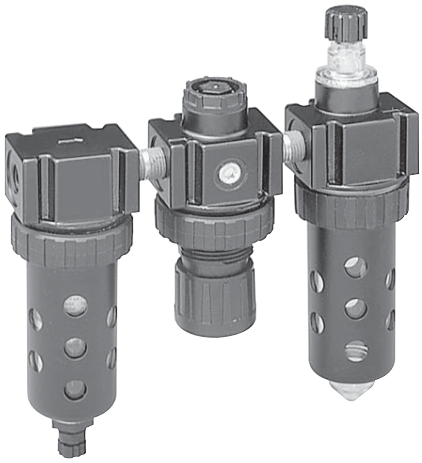

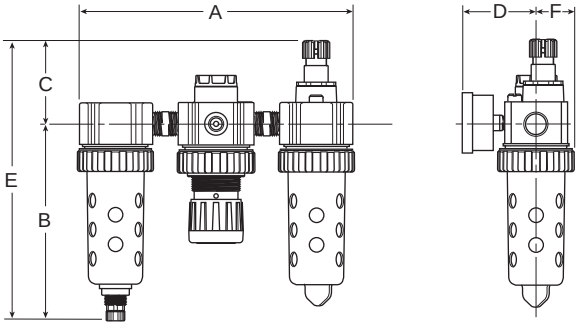

Series	Port	Model Numbers
15A	1/4"	**15A12A13A2N***
	3/8"	**15A22A13A2N***

For other models, refer to ordering information on next page.

A	B	C	D	E	F
7.00 (178)	5.35 (136)	2.24 (57)	2.05 (52)	7.59 (193)	1.03 (26)

Inches (mm)
Note: All dimensions nominal.

Parker Hannifin Corporation
Pneumatic Division
Richland, Michigan
www.parker.com/pneumatics

Close Nippled Combinations – 05 Economy Series

Ordering Information

15A	1	2	A	13	A	2	N	*

Series
- **15A 3-Unit**
- **15G 2-Unit**

Port Size
- **1 1/4 Inch**
- **2 3/8 Inch**

Filter Element
- **A 40 Micron**
- B 5 Micron

Filter Bowl Options

Poly Bowl
- 1 Twist Drain
- **2 Metal Bowl Guard / Twist Drain**
- N Automatic Pulse Drain
- **P Metal Bowl Guard / Automatic Pulse Drain**

Metal Bowl
- 3 Twist Drain
- **4 Sight Gauge / Twist Drain**
- R Automatic Pulse Drain
- **T Sight Gauge / Automatic Pulse Drain**

Regulator Pressure

Without Gauge
- 10 30 psig
- **11 60 psig**
- **13 125 psig**
- 14§ 200 psig

With Gauge *
- 17 30 psig
- **16 60 psig**
- **18 125 psig**
- 19§ 200 psig

* Includes 1-1/2" Dial Face Gauge
§ Metal Bowls Only

Relief
- **A Relieving**
- H Low Temp. Relieving
- J Low Temp Non-Relieving
- L Non-Relieving

Lubricator Bowl Options

Poly Bowl
- 1 No Drain
- **2 Metal Bowl Guard / No Drain**
- 5 Pressure Fill
- 6 Metal Bowl Guard / Pressure Fill

Metal Bowl / Sight Gauge
- **4 Twist Drain**
- 8 Pressure Fill

Lubricator Body Options
- B With Fill Plug
- F With Body Pressure Fill
- **N No Fill Plug**

Engineering Level
- * Will be Entered at Factory

BOLD ITEMS ARE MOST POPULAR.

CAUTION:

REGULATOR PRESSURE ADJUSTMENT – The working range of knob adjustment is designed to permit outlet pressures within their full range. Pressure adjustment beyond this range is also possible because the knob is not a limiting device. This is a common characteristic of most industrial regulators, and limiting devices may be obtained only by special design.

For best performance, regulated pressure should always be set by increasing the pressure up to the desired setting.

⚠ WARNING

Product rupture can cause serious injury.
Do not connect regulator to bottled gas.
Do not exceed maximum primary pressure rating.

For polycarbonate bowl and sight dome, see Caution on page C2.

Kits & Accessories (See individual component sections for other kits and accessories.)

Mounting Bracket Kit PS963P
(Includes Panel Mount Nut)

Parker Hannifin Corporation
Pneumatic Division
Richland, Michigan
www.parker.com/pneumatics

Modular Combinations – 05 Economy Series

- Regulator can be mounted with knob in up or down position.
- See individual component pages for details.
- Gauges, Port Blocks, Manifold Blocks and Ball Valve must be ordered separately.

Two-Unit Combo

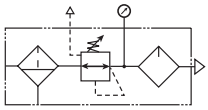

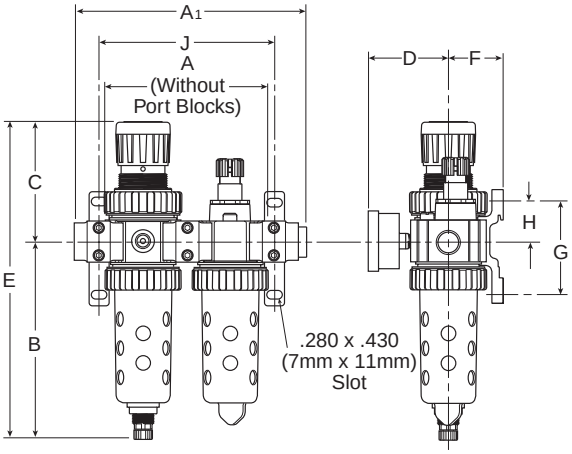

Series	Port	Model Numbers
15H	1/4"	**15H12A13A2N***
	3/8"	**15H22A13A2N***

For other models, refer to ordering information on next page.

A	A1	B	C	D	E	F
4.33 (110)	6.38 (162)	5.35 (136)	3.15 (80)	2.05 (52)	8.50 (216)	1.45 (37)
G	**H**	**J**				
2.60 (66)	1.14 (29)	4.72 (120)				

Inches (mm)
- All dimensions nominal.
- **Mounting brackets not included.**

Three-Unit Combo

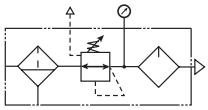

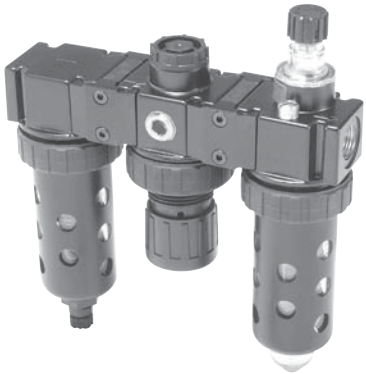

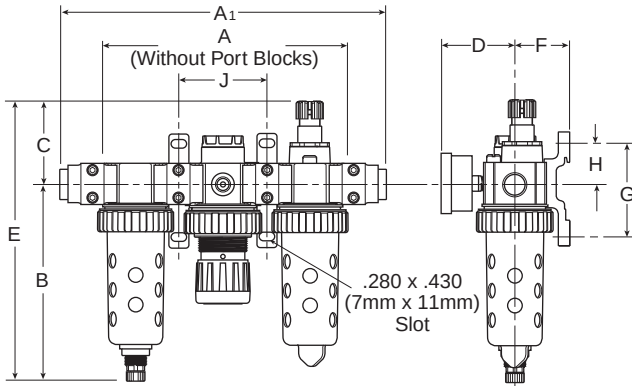

Series	Port	Model Numbers
15B	1/4"	**15B12A13A2N***
	3/8"	**15B22A13A2N***

For other models, refer to ordering information on next page.

A	A1	B	C	D	E	F
6.70 (170)	8.72 (222)	5.35 (136)	2.24 (57)	2.05 (52)	7.59 (193)	1.45 (37)
G	**H**	**J**				
2.60 (66)	1.14 (29)	2.35 (600)				

Inches (mm)
- All dimensions nominal.
- **Mounting brackets not included.**

Parker Hannifin Corporation
Pneumatic Division
Richland, Michigan
www.parker.com/pneumatics

Modular Combinations – 05 Economy Series

Ordering Information

15B	1	2	A	13	A	2	N	*	—

Series
- **15B 3-Unit**
- **15H 2-Unit**

Port Size
- **1 1/4 Inch**
- **2 3/8 Inch**

Filter Element
- **A 40 Micron**
- B 5 Micron

Relief
- **A Relieving**
- H Low Temp. Relieving
- J Low Temp Non-Relieving
- L Non-Relieving

Engineering Level
- * Will be Entered at Factory

Modular Options
- **Blank No Port Blocks**
- A With Mounting Bracket & Port Block
- B With Mounting Bracket, Lockout & Port Block
- C With Mounting Bracket & Lockout
- G With Port Blocks
- J With Lockout (No Port Blocks)
- K With Lockout and Port Blocks
- W With Mounting Bracket

Lubricator Body Options
- B With Fill Plug
- F With Body Pressure Fill
- **N No Fill Plug**

Filter Bowl Options

Poly Bowl
- 1 Twist Drain
- **2 Metal Bowl Guard / Twist Drain**
- N Automatic Pulse Drain
- **P Metal Bowl Guard / Automatic Pulse Drain**

Metal Bowl
- 3 Twist Drain
- **4 Sight Gauge / Twist Drain**
- R Automatic Pulse Drain
- **T Sight Gauge / Automatic Pulse Drain**

Regulator Pressure

Without Gauge
- 10 30 psig
- **11 60 psig**
- **13 125 psig**
- 14§ 200 psig

With Gauge *
- 17 30 psig
- **16 60 psig**
- **18 125 psig**
- 19§ 200 psig

* Includes 1-1/2" Dial Face Gauge

§ Metal Bowls Only

Lubricator Bowl Options

Poly Bowl
- 1 No Drain
- **2 Metal Bowl Guard / No Drain**
- 5 Pressure Fill
- 6 Metal Bowl Guard / Pressure Fill

Metal Bowl / Sight Gauge
- **4 Twist Drain**
- 8 Pressure Fill

BOLD ITEMS ARE MOST POPULAR.

CAUTION:

REGULATOR PRESSURE ADJUSTMENT – The working range of knob adjustment is designed to permit outlet pressures within their full range. Pressure adjustment beyond this range is also possible because the knob is not a limiting device. This is a common characteristic of most industrial regulators, and limiting devices may be obtained only by special design.

For best performance, regulated pressure should always be set by increasing the pressure up to the desired setting.

⚠ WARNING

Product rupture can cause serious injury.
Do not connect regulator to bottled gas.
Do not exceed maximum primary pressure rating.

For polycarbonate bowl and sight dome, see Caution on page C2.

Kits & Accessories (See individual component sections for other kits and accessories.)

Body Connector Kit PS954P
Lockout Valve PS95601P
Manifold Block PS95701P
Pressure Switches –
DIN Connectors P01909
Flying Leads P01908
Wall Mounting Kit PS955P

Port Block Kits:	**1/8"**	**1/4"**	**3/8"**
NPT	**PS95000P**	**PS95001P**	**PS95002P**
BSPP	**PS95010P**	**PS95011P***	**PS95012P***
BSPT	**PS95020P**	**PS95021P**	**PS95022P**

* 1/4 & 3/8 inch meet ISO 1179-1 Standard.

Parker Hannifin Corporation
Pneumatic Division
Richland, Michigan
www.parker.com/pneumatics

Modular Accessories – 05 Economy Series

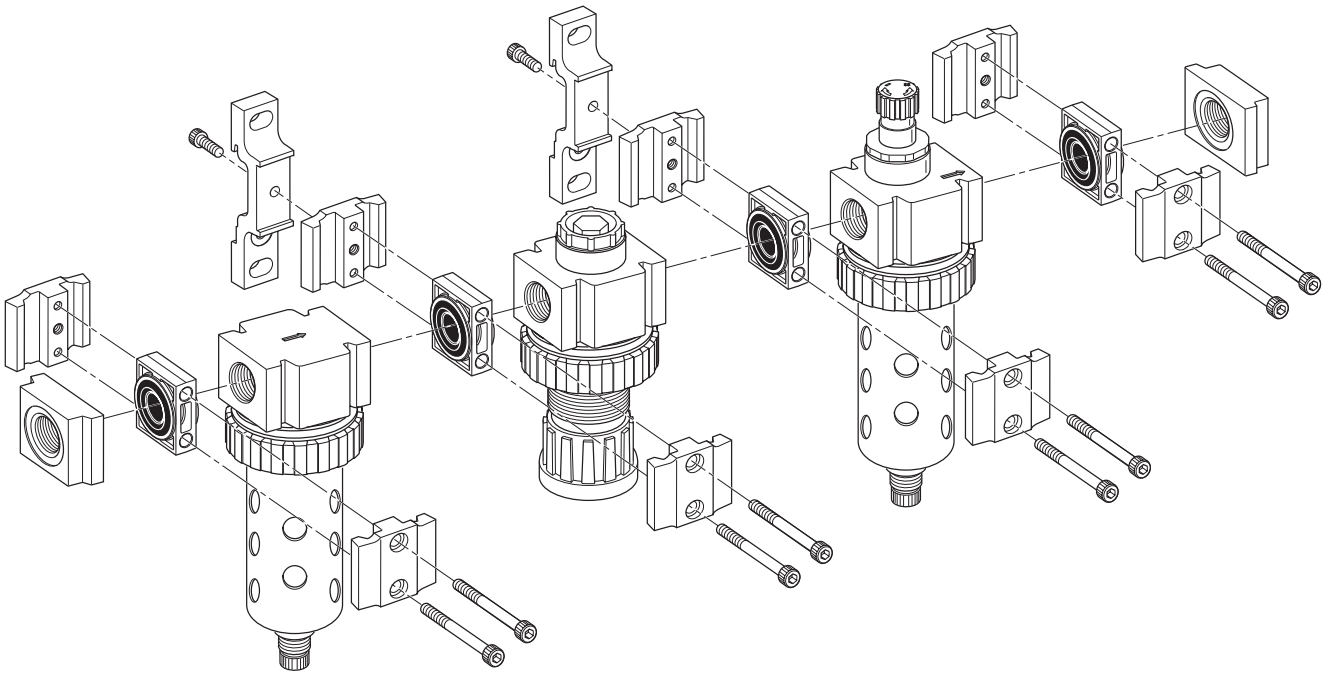

Port Block Connector Kits

	1/8"	1/4"	3/8"
NPT	PS95000P	PS95001P	PS95002P
BSPP	PS95010P	PS95011P*	PS95012P*
BSPT	PS95020P	PS95021P	PS95022P

* 1/4 & 3/8 inch meet ISO 1179-1 Standard.

Body Connectors

PS954P

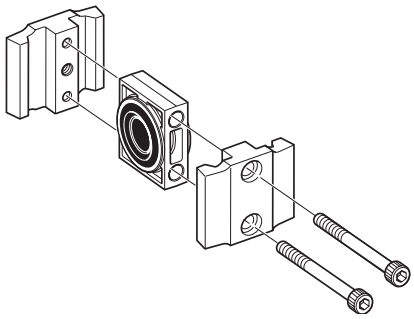

Body Connectors allow you to easily assemble and disassemble Modular Combinations.

Body Connectors are required whenever you assemble two or more pieces together.

Each Kit includes one set.

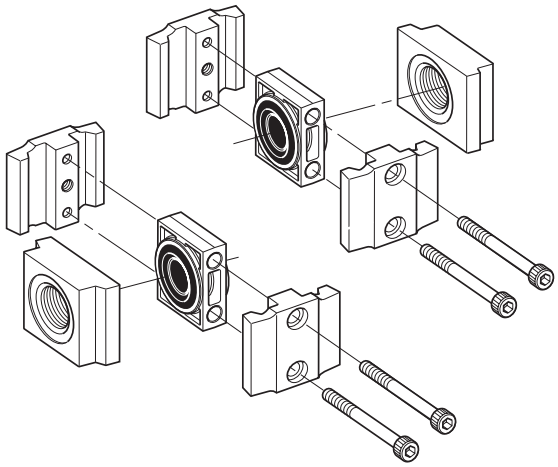

Port Block Connectors allow you to make threaded port connections to Modular units and are available in various port sizes to match your system requirements.

Each Kit includes all the necessary pieces to make two port connections.

Parker Hannifin Corporation
Pneumatic Division
Richland, Michigan
www.parker.com/pneumatics

Modular Accessories – 05 Economy Series

Wall Mounting Kits

PS955P

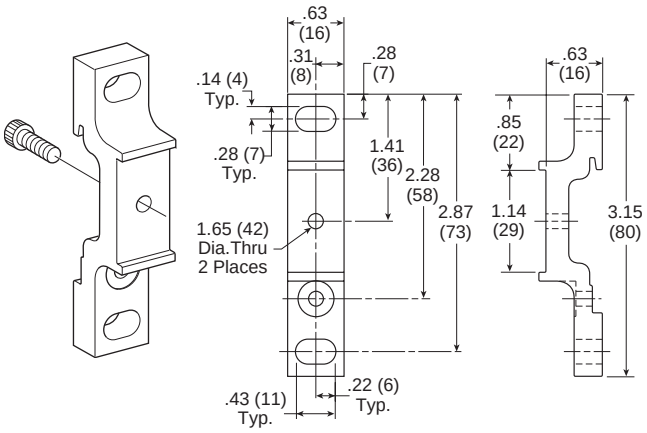

Wall Mounting Kits are available for mounting your Modular Assemblies and can be assembled and used with any standard body connector set.

Since Modular Combinations are always identical in size, you can predrill for wall mounting on your equipment.

Kit includes 1 assembly.

Lockout Valve

PS95601P

1/4" Port

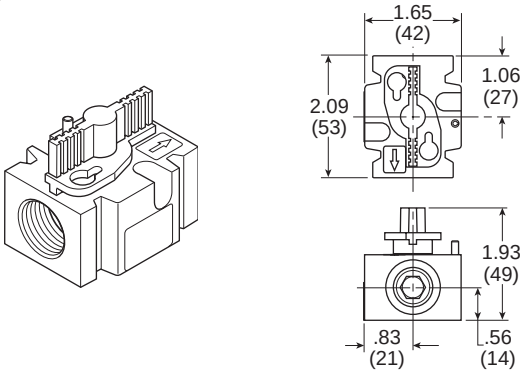

Lockout Valves provide positive shut-off and exhaust capability to isolate Modular units so they can be easily removed from the line and can be locked in a closed position. Center position can be used as a slow start for 06 and 07 series. Accepts #3 padlock.

NOTE: Body Connectors are not supplied with Lockout Valves.

Modular Manifold Block

PS95701P

1/4" Port

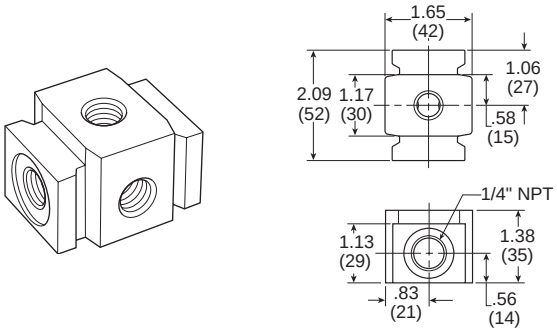

A Modular Manifold Block can be used between any two Modular units to give additional outlet ports. The 1/4" Manifold Block provides three additional outlets. Any standard pipe plug can be used to close off unused ports.

NOTE: Body Connectors are not supplied with Manifold Blocks.

Parker Hannifin Corporation
Pneumatic Division
Richland, Michigan
www.parker.com/pneumatics

Close Nippled Combinations – 06 Compact & 07 Standard Series

- See individual component pages for details.

Two-Unit Combo

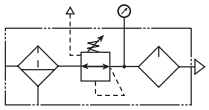

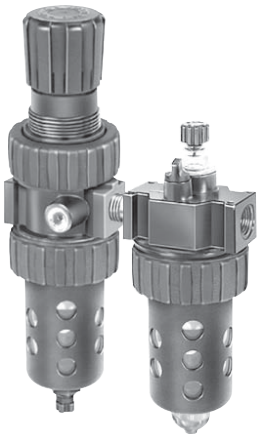

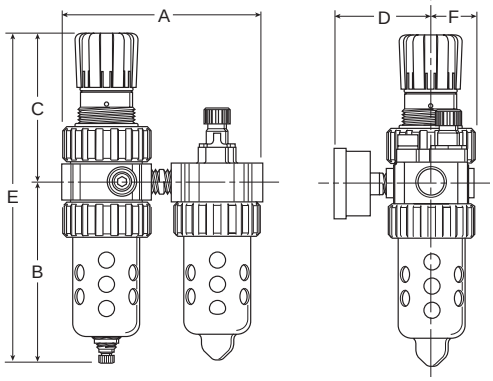

Series	Model Numbers	Port	Model Numbers	Series
06G	06G12A13A2B*	1/4"	16G12A13A2B*	16G
	06G22A13A2B*	3/8"	16G22A13A2B*	
	06G32A13A2B*	1/2"	16G32A13A2B*	
07G	07G22A13A2B*	3/8"	17G22A13A2B*	17G
	07G32A13A2B*	1/2"	17G32A13A2B*	
	07G42A13A2B*	3/4"	17G42A13A2B*	

For other models, refer to ordering information on next page.

06G, 16G Series					
A	**B**	**C**	**D**	**E**	**F**
6.13 (156)	5.69 (145)	4.69 (119)	3.18 (81)	10.38 (264)	1.37 (35)
07G, 17G Series					
A	**B**	**C**	**D**	**E**	**F**
6.99 (178)	6.97 (177)	4.79 (122)	3.44 (87)	11.76 (299)	1.63 (41)

Inches (mm)
- All dimensions nominal.

Three-Unit Combo

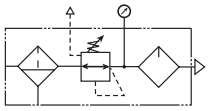

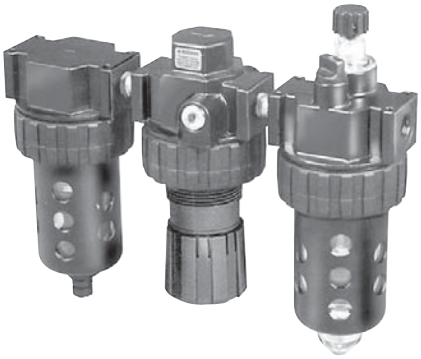

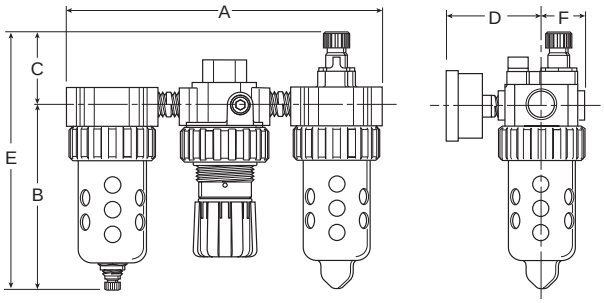

Series	Model Numbers	Port	Model Numbers	Series
06A	06A12A13A2B*	1/4"	16A12A13A2B*	16A
	06A22A13A2B*	3/8"	16A22A13A2B*	
	06A32A13A2B*	1/2"	16A32A13A2B*	
07A	07A22A13A2B*	3/8"	17A22A13A2B*	17A
	07A32A13A2B*	1/2"	17A32A13A2B*	
	07A42A13A2B*	3/4"	17A42A13A2B*	

For other models, refer to ordering information on next page.

06A, 16A Series					
A	**B**	**C**	**D**	**E**	**F**
9.45 (240)	5.69 (145)	2.24 (57)	3.18 (81)	7.93 (201)	1.37 (35)
07A, 17A Series					
A	**B**	**C**	**D**	**E**	**F**
10.74 (2738)	6.97 (177)	2.41 (61)	3.44 (87)	9.38 (238)	1.63 (41)

Inches (mm)
- All dimensions nominal.

Parker Hannifin Corporation
Pneumatic Division
Richland, Michigan
www.parker.com/pneumatics

Close Nippled Combinations – 06 Compact & 07 Standard Series

Ordering Information

16A	1	2	A	13	A	1	B	*

Series

Micro-Mist
- **16A Compact 3-Unit**
- **17A Standard 3-Unit**
- **16G Compact 2-Unit**
- **17G Standard 2-Unit**

Mist
- **06A Compact 3-Unit**
- **07A Standard 3-Unit**
- **06G Compact 2-Unit**
- **07G Standard 2-Unit**

Port Size
- **1 1/4 Inch***
- **2 3/8 Inch**
- **3 1/2 Inch**
- **4 3/4 Inch****

* Available on 06/16 Series only.
** Available on 07/17 Series only.

Filter Element
- **A 40 Micron**
- B 5 Micron

Relief
- **A Relieving**
- L Non-Relieving

Lubricator Body Options
- **B With Fill Plug**
- F With Body Pressure Fill

Engineering Level
- * Will be Entered at Factory

Filter Bowl Options

Poly Bowl
- 1 Twist Drain
- **2 Metal Bowl Guard / Twist Drain**
- 5 Automatic Float Drain
- **6 Metal Bowl Guard / Automatic Float Drain**

Metal Bowl
- 3 Twist Drain
- **4 Sight Gauge / Twist Drain**
- 7 Automatic Float Drain
- **8 Sight Gauge / Automatic Float Drain**

Regulator Pressure

Without Gauge
- **11 60 psig**
- **13 125 psig**
- 15* 250 psig

With Gauge
- **16 60 psig**
- **18 125 psig**
- 21* 250 psig

* If 250 psig spring range is used, use Metal Bowl.

Lubricator Bowl Options

Poly Bowl
- 1 No Drain
- **2 Metal Bowl Guard / No Drain**
- 5 Pressure Fill
- 6 Metal Bowl Guard / Pressure Fill
- A Liquid Level Sensor
- B Metal Bowl Guard / Liquid Level Sensor
- J Auto FIll
- K Metal Bowl Guard / Auto Fill
- R Twist Drain
- N Metal Bowl Guard / Twist Drain

Metal Bowl / Sight Gauge
- **4 Twist Drain**
- 8 Pressure Fill
- D Liquid Level Sensor
- M Auto FIll

BOLD ITEMS ARE MOST POPULAR.

CAUTION:

REGULATOR PRESSURE ADJUSTMENT – The working range of knob adjustment is designed to permit outlet pressures within their full range. Pressure adjustment beyond this range is also possible because the knob is not a limiting device. This is a common characteristic of most industrial regulators, and limiting devices may be obtained only by special design.

For best performance, regulated pressure should always be set by increasing the pressure up to the desired setting.

⚠ WARNING

Product rupture can cause serious injury.
Do not connect regulator to bottled gas.
Do not exceed maximum primary pressure rating.

For polycarbonate bowl and sight dome, see Caution on page C2.

Kits & Accessories (See individual component sections for other kits and accessories.)

Mounting Bracket Kit (Includes Panel Mount Nut)
06A, 16A , 06G, 16G PS707P
07A, 17A , 07G, 17G PS807P

Parker Hannifin Corporation
Pneumatic Division
Richland, Michigan
www.parker.com/pneumatics

Modular Combinations – 06 Compact & 07 Standard Series

- See individual component pages for details.

Two-Unit Combo

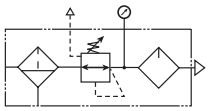

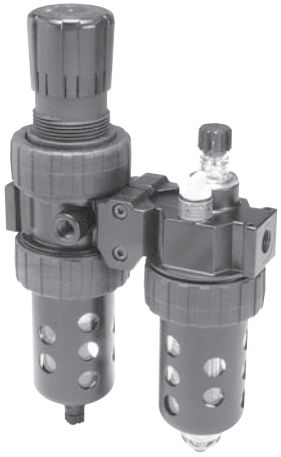

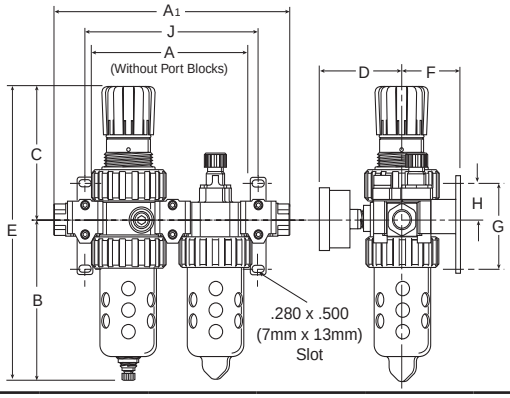

Series	Model Numbers	Port	Model Numbers	Series
06H	06H12A13A2B*	1/4"	16H12A13A2B*	16H
	06H22A13A2B*	3/8"	16H22A13A2B*	
	06H32A13A2B*G	1/2"†	16H32A13A2B*G	
07H	07H22A13A2B*	3/8"	17H22A13A2B*	17H
	07H32A13A2B*	1/2"	17H32A13A2B*	
	07H42A13A2B*	3/4"	17H42A13A2B*	

For other models, refer to ordering information on next page.
† 06 / 16 Available with Port Blocks Only.

06H, 16H Series					
A	**A1**	**B**	**C**	**D**	**E**
6.10 (155)	9.04 (230)	5.69 (145)	4.69 (119)	3.18 (81)	10.38 (264)
F	**G**	**H**	**J**		
2.00 (51)	3.58 (91)	1.40 (36)	6.65 (169)		
07H, 17H Series					
A	**A1**	**B**	**C**	**D**	**E**
7.00 (178)	10.28 (261)	6.97 (177)	4.79 (122)	3.44 (87)	11.76 (299)
F	**G**	**H**	**J**		
2.09 (53)	3.58 (91)	1.40 (36)	7.51 (191)		

Inches (mm)
• All dimensions nominal.

Three-Unit Combo

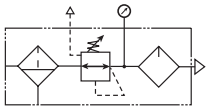

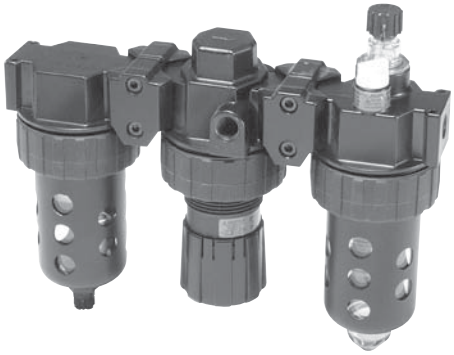

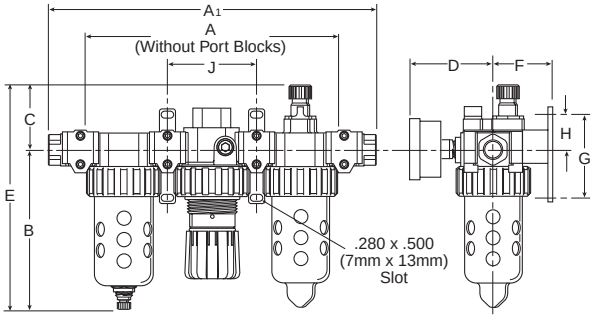

Series	Model Numbers	Port	Model Numbers	Series
06B	06B12A13A2B*	1/4"	16B12A13A2B*	16B
	06B22A13A2B*	3/8"	16B22A13A2B*	
	06B32A13A2B*G	1/2"†	16B32A13A2B*G	
07B	07B22A13A2B*	3/8"	17B22A13A2B*	17B
	07B32A13A2B*	1/2"	17B32A13A2B*	
	07B42A13A2B*	3/4"	17B42A13A2B*	

For other models, refer to ordering information on next page.
† 06 / 16 Available with Port Blocks Only.

06B, 16B Series					
A	**A1**	**B**	**C**	**D**	**E**
9.46 (240)	12.39 (315)	5.69 (145)	2.24 (57)	3.18 (81)	7.82 (199)
F	**G**	**H**	**J**		
2.00 (51)	3.58 (91)	1.40 (36)	3.33 (85)		
07B, 17B Series					
A	**A1**	**B**	**C**	**D**	**E**
10.750 (273)	14.03 (356)	6.97 (177)	2.41 (61)	3.44 (87)	9.27 (235)
F	**G**	**H**	**J**		
2.18 (55)	3.58 (91)	1.40 (36)	3.76 (95)		

Inches (mm)
• All dimensions nominal.

Parker Hannifin Corporation
Pneumatic Division
Richland, Michigan
www.parker.com/pneumatics

Modular Combinations – 06 Compact & 07 Standard Series

Ordering Information

16B	1	2	A	13	A	2	B	*	—

Series

Micro-Mist
- **16B Compact 3-Unit**
- **17B Standard 3-Unit**
- **16H Compact 2-Unit**
- **17H Standard 2-Unit**

Mist
- **06B Compact 3-Unit**
- **07B Standard 3-Unit**
- **06H Compact 2-Unit**
- **07H Standard 2-Unit**

Port Size
- **1 1/4 Inch***
- **2 3/8 Inch**
- **3 1/2 Inch*****
- **4 3/4 Inch****

* Available on 06/16 Series only.
** Available on 07/17 Series only.
*** 06/16 available with Port Blocks only.

Filter Element
- **A 40 Micron**
- B 5 Micron

Relief
- **A Relieving**
- L Non-Relieving

Engineering Level
- * Will be Entered at Factory

Modular Options
- **Blank No Port Blocks**
- A With Mounting Bracket & Port Block
- B With Mounting Bracket, Lockout & Port Block
- C* With Mounting Bracket & Lockout
- G With Port Blocks
- J With Lockout (No Port Blocks)
- K With Lockout and Port Blocks
- W With Mounting Bracket

* 06/16 series 1/2" units not available with option C. Use option B.

Lubricator Body Options
- **B With Fill Plug**
- F With Body Pressure Fill

Filter Bowl Options

Poly Bowl
- 1 Twist Drain
- **2 Metal Bowl Guard / Twist Drain**
- 5 Automatic Float Drain
- **6 Metal Bowl Guard / Automatic Float Drain**

Metal Bowl
- 3 Twist Drain
- **4 Sight Gauge / Twist Drain**
- 7 Automatic Float Drain
- **8 Sight Gauge / Automatic Float Drain**

Regulator Pressure

Without Gauge
- **11 60 psig**
- **13 125 psig**
- 15* 250 psig

With Gauge
- **16 60 psig**
- **18 125 psig**
- 21* 250 psig

* If 250 psig spring range is used, use Metal Bowl.

Lubricator Bowl Options

Poly Bowl
- 1 No Drain
- **2 Metal Bowl Guard / No Drain**
- 5 Pressure Fill
- 6 Metal Bowl Guard / Pressure Fill
- A Liquid Level Sensor
- B Metal Bowl Guard / Liquid Level Sensor
- J Auto FIll
- K Metal Bowl Guard / Auto Fill
- R Twist Drain
- N Metal Bowl Guard / Twist Drain

Metal Bowl / Sight Gauge
- **4 Twist Drain**
- 8 Pressure Fill
- D Liquid Level Sensor
- M Auto FIll

BOLD ITEMS ARE MOST POPULAR.

CAUTION:

REGULATOR PRESSURE ADJUSTMENT – The working range of knob adjustment is designed to permit outlet pressures within their full range. Pressure adjustment beyond this range is also possible because the knob is not a limiting device. This is a common characteristic of most industrial regulators, and limiting devices may be obtained only by special design.

For best performance, regulated pressure should always be set by increasing the pressure up to the desired setting.

⚠ WARNING

Product rupture can cause serious injury.
Do not connect regulator to bottled gas.
Do not exceed maximum primary pressure rating.

For polycarbonate bowl and sight dome, see Caution on page C2.

Kits & Accessories (See individual component sections for other kits and accessories.)

Body Connector Kit	PS754P
Lockout Valve	PS756P
Manifold Block	PS757P
Pressure Switches –	
DIN Connectors	P01909
Flying Leads	P01908
Wall Mounting Kit	PS755P

Port Block Kits:	**Size**	**NPT**	**BSPP**	**BSPT**
06 Series	**1/4"**	PS750P	PS765P†	PS761P
	3/8"	PS751P	PS766P†	PS762P
	1/2"	PS752P*	PS767P*†	PS799P*
07 Series	**1/4"**	PS850P	PS865P	PS861P
	3/8"	PS851P	PS866P	PS862P
	1/2"	PS852P	PS867P‡	PS863P
	3/4"	PS853P	PS860P	PS864P

* Use 1/4 or 3/8 ported bodies.
† 1/4, 3/8 & 1/2 inch meet ISO 1179-1 Standard.
‡ 1/2 inch meets ISO 1179-1 Standard.

Parker Hannifin Corporation
Pneumatic Division
Richland, Michigan
www.parker.com/pneumatics

Modular Accessories – 06 Compact & 07 Standard Series

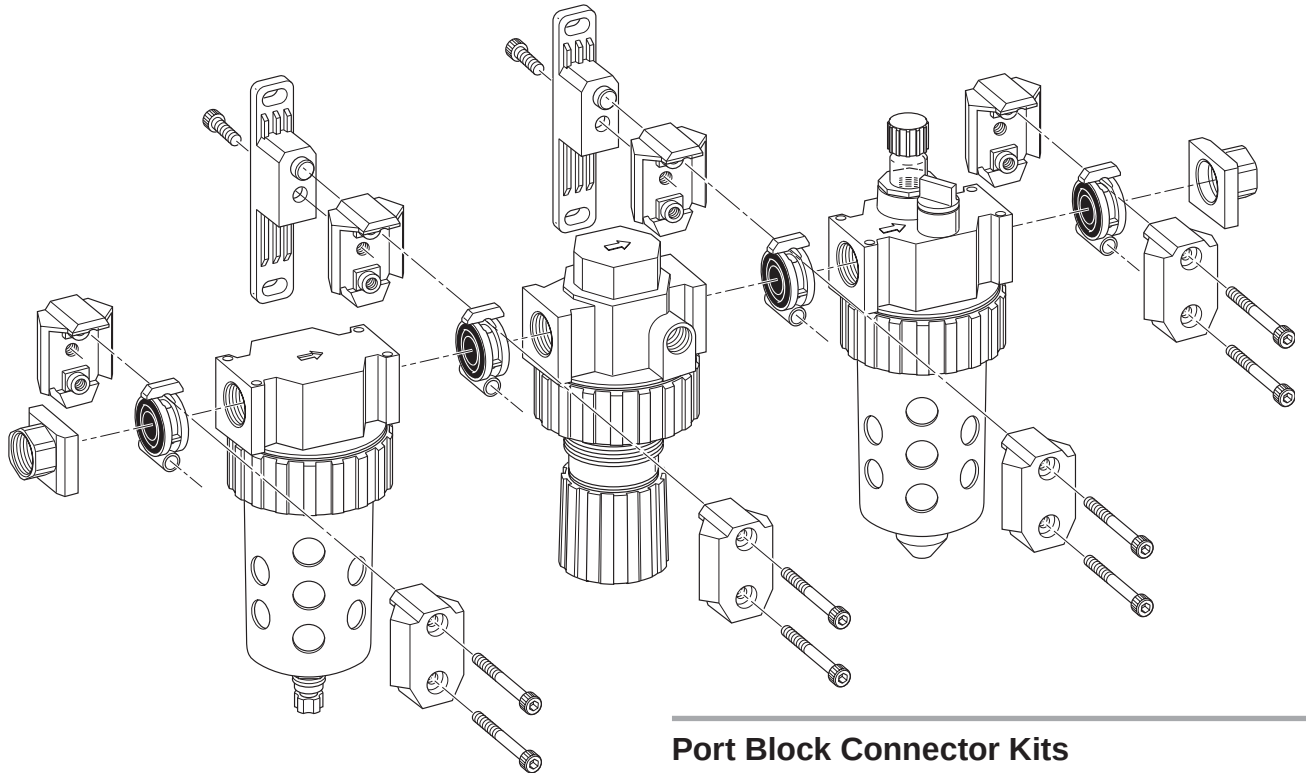

Port Block Connector Kits

Series	Size	NPT	BSPP	BSPT
06 Series	1/4"	**PS750P**	**PS765P**†	**PS761P**
	3/8"	**PS751P**	**PS766P**†	**PS762P**
	1/2"	**PS752P***	**PS767P***†	**PS799P***

* Use 1/4 or 3/8 ported bodies.
† 1/4, 3/8 & 1/2 inch meet ISO 1179-1 Standard.

07 Series	1/4"	**PS850P**	**PS865P**	**PS861P**
	3/8"	**PS851P**	**PS866P**	**PS862P**
	1/2"	**PS852P**	**PS867P**‡	**PS863P**
	3/4"	**PS853P**	**PS860P**	**PS864P**

‡ 1/2 inch meets ISO 1179-1 Standard.

Body Connectors

06 Series **PS754P**

07 Series **PS854P**

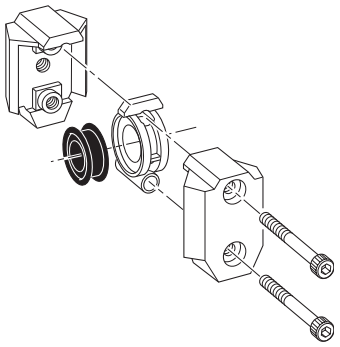

Body Connectors allow you to easily assemble and disassemble Modular Combinations.

Each Kit includes one set.

Body Connectors are required whenever you assemble two or more pieces together.

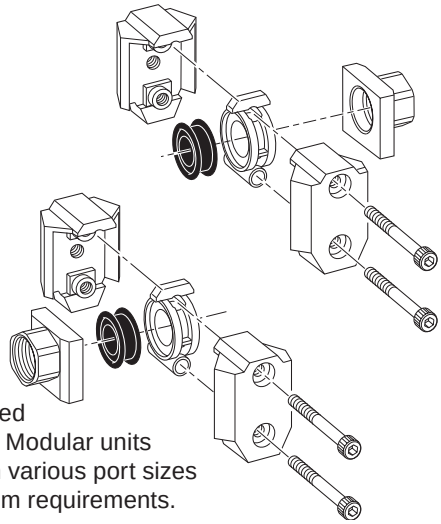

Port Block Connectors allow you to make threaded port connections to Modular units and are available in various port sizes to match your system requirements.

Each Kit includes all the necessary pieces to make two port connections.

Parker Hannifin Corporation
Pneumatic Division
Richland, Michigan
www.parker.com/pneumatics

Modular Accessories – 06 Compact & 07 Standard Series

Wall Mounting Kits

06 Series & 07 Series PS755P

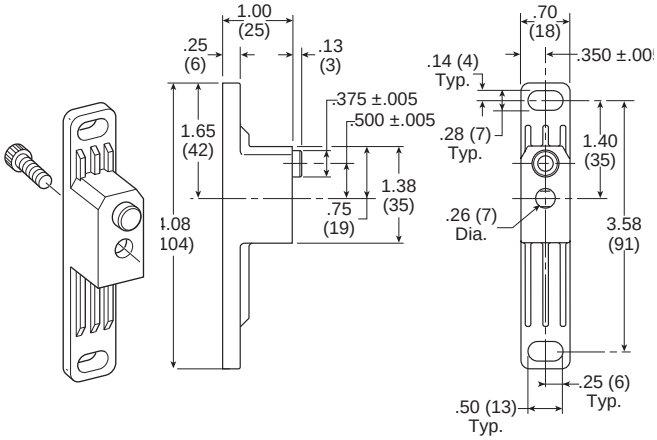

Wall Mounting Kits are available for mounting your Modular Assemblies and can be assembled and used with any standard body connector set.

Since Modular Combinations are always identical in size, you can predrill for wall mounting on your equipment.

Kit includes 1 assembly.

Lockout Valves

06 Series ..... PS756P ..... 3/8" Port

07 Series ..... PS856P ..... 1/2" Port

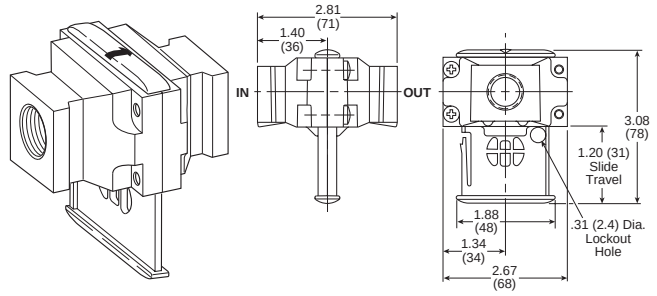

Lockout Valves provide positive shut-off and exhaust capability to isolate Modular units so they can be easily removed from the line and can be locked in a closed position. Center position can be used as a slow start. Accepts #3 padlock.

NOTE: Body Connectors are not supplied with Lockout Valves.

Modular Manifold Block

06 Series ..... PS757P ..... 3/8" Port

07 Series ..... PS857P ..... 1/2" Port

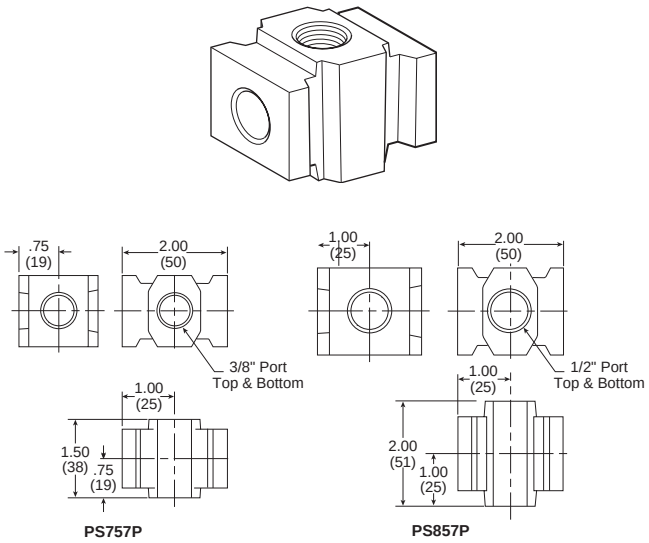

A Modular Manifold Block can be used between any two Modular units to give additional outlet ports. The Manifold Block provides 2 additional outlets in 3/8" and 1/2" sizes. Any standard pipe plug can be used to close off unused ports.

NOTE: Body Connectors are not supplied with Manifold Blocks.

Parker Hannifin Corporation
Pneumatic Division
Richland, Michigan
www.parker.com/pneumatics

Close Nippled Combinations – P3N Hi-Flow Series

- Regulator can be mounted with knob in up or down position.
- See individual component pages for details.

Two-Unit Combo

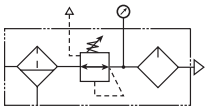

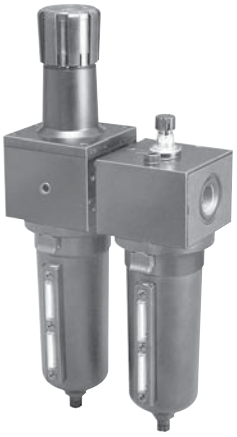

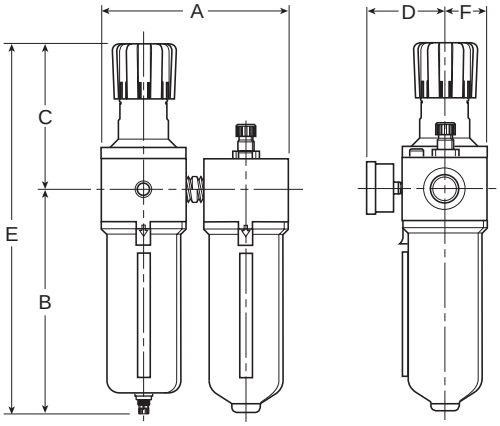

- 40 Micron Filter Element
- Manual Twist Drain
- Relieving Regulator
- 125 PSI (8.6 bar)

Series	Port	Model Numbers
P3N3A	3/4"	**P3N3A96SGMNNLNA**
	1"	**P3N3A98SGMNNLNA**
	1-1/2"†	**P3N3A9PSGMNNLNA**

Notes: All Combo part numbers are with regulator knob in up position.
† 1" Port Body with 1-1/2" Port Block.
For other models, refer to Ordering Information on next page.

A	B	C	D	E	F
7.76 (197)	9.57 (243)	6.38 (162)	3.56 (90)	15.95 (405)	1.81 (50)

Inches (mm)
- All dimensions nominal.
- **Mounting brackets not included (change last character in model number to "B" if required).**
- **Gauges not included (change 12th character to "G" if required).**

Three-Unit Combo

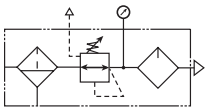

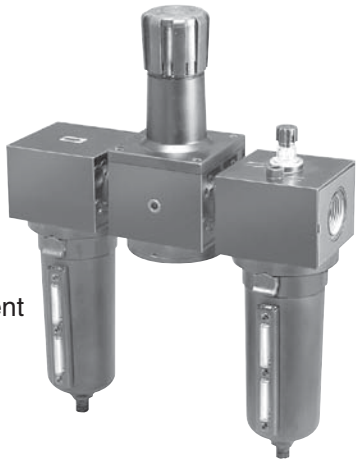

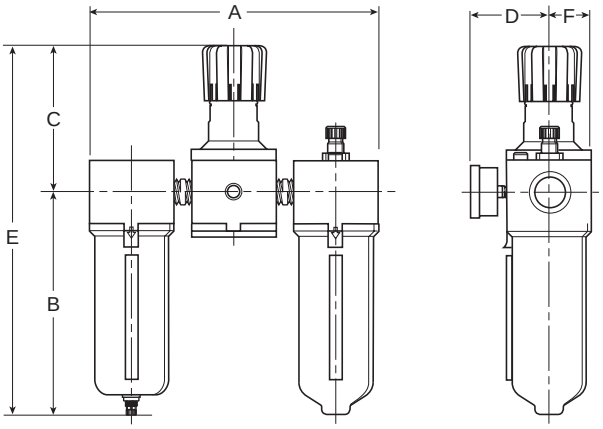

- 40 Micron Filter Element
- Manual Twist Drain
- Relieving Regulator
- 125 PSI (8.6 bar)

Series	Port	Model Numbers
P3N3B	3/4"	**P3N3B96SGMNNLNA**
	1"	**P3N3B98SGMNNLNA**
	1-1/2"†	**P3N3B9PSGMNNLNA**

Notes: All Combo part numbers are with regulator knob in up position.
† 1" Port Body with 1-1/2" Port Block.
For other models, refer to Ordering Information on next page.

A	B	C	D	E	F
11.89 (302)	9.57 (243)	6.38 (162)	3.56 (90)	15.95 (405)	1.81 (50)

Inches (mm)
- All dimensions nominal.
- **Mounting brackets not included (change last character in model number to "B" if required).**
- **Gauges not included (change 12th character to "G" if required).**

Parker Hannifin Corporation
Pneumatic Division
Richland, Michigan
www.parker.com/pneumatics

Close Nippled Combinations – P3N Hi-Flow Series

Ordering Information

P3N	3	A	9	6	S	G	M	N	N	L	N	A
Series												

Type
- **3 Combinations w/ Pipe Nipples**

Combination
- Metal Bowl
- **A Hi-Flow 2-Unit**
- **B Hi-Flow 3-Unit**

Port Type
- **9 NPT Female**

Port Size
- **6 3/4" (w/o Port Blocks)**
- **8 1" (w/o Port Blocks)**
- **P 1-1/2" Port Blocks (w/ 1" Ported Body)**

Bowl
- **S Metal Bowl w/ Sight Gauge**

Filter Elements
- E 5 Micron
- **G 40 Micron**

Filter Drains
- **M Twist Drain**
- A Automatic Float Drain

Relief
- **N Relieving**
- M Non-Relieving

Regulator Pressure Range & Gauges
- **Without Gauge**
- L 60 PSI (0 to 4 bar)
- **N 125 PSI (0 to 8 bar)**
- H 250 PSI (0 to 17 bar)
- **With Gauge**
- M 60 PSI (0 to 4 bar)
- G 125 PSI (0 to 8 bar)
- J 250 PSI (0 to 17 bar)

Lubricator Type
- Oil Mist
- **L w/ Polycarbonate Sight Dome**
- A w/ Nylon Sight Dome

Lubricator Drain / Fill Devices
- **N No Drain, Solid Bowl / Fill Plug**
- M Manual Twist Drain / Fill Plug
- A Automatic Fill / Fill Plug
- S Bowl Pressure Fill / Fill Plug
- H No Drain / Body Pressure Fill
- J Manual Twist Drain / Body Pressure Fill

Mounting Options
- **A No Brackets or Kits**
- B Wall Bracket

BOLD ITEMS ARE MOST POPULAR.

CAUTION:

REGULATOR PRESSURE ADJUSTMENT – The working range of knob adjustment is designed to permit outlet pressures within their full range. Pressure adjustment beyond this range is also possible because the knob is not a limiting device. This is a common characteristic of most industrial regulators, and limiting devices may be obtained only by special design.

For best performance, regulated pressure should always be set by increasing the pressure up to the desired setting.

⚠ WARNING

Product rupture can cause serious injury.
Do not connect regulator to bottled gas.
Do not exceed maximum primary pressure rating.

Kits & Accessories (See individual component sections for other kits and accessories.)

Wall Mounting Kit* P3NKA00MW

* If 1-1/2 BSPP E02 fittings are required, use P3NKA0BMW.

Parker Hannifin Corporation
Pneumatic Division
Richland, Michigan
www.parker.com/pneumatics

Modular Combinations – P3N Hi-Flow Series

- Regulator can be mounted with knob in up or down position.
- See individual component pages for details.

Two-Unit Combo

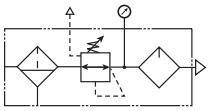

- 40 Micron Filter Element
- Manual Twist Drain
- Relieving Regulator
- 125 PSI (8.6 bar)

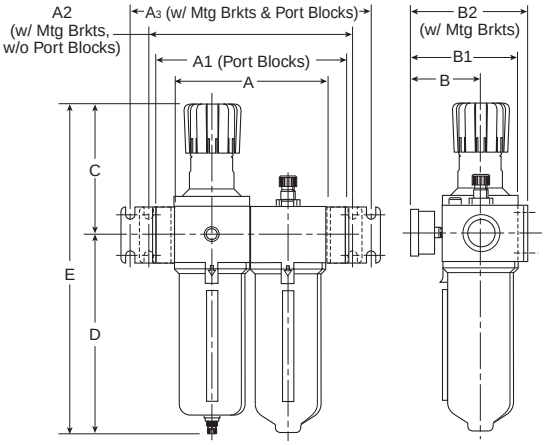

Series	Port	Model Numbers
P3NCA	3/4"	**P3NCA96SGMNNLNA**
	1"	**P3NCA98SGMNNLNA**
	1-1/2" †	**P3NCA9PSGMNNLNA**

Notes: All Combo part numbers are with regulator knob in up position.
† 1" Port Body with 1-1/2" Port Block.
For other models, refer to Ordering Information on next page.

A	A_1	A_2	A_3	B	B_1	B_2
7.24 (184)	9.53 (242)	9.84 (250)	12.13 (308)	3.62 (92)	5.20 (132)	5.74 (146)
C	**D**	**E**				
6.38 (162)	9.57 (243)	15.95 (405)				

Inches (mm)
- All dimensions nominal.
- **Mounting brackets not included (change last character in model number to "B" if required).**
- **Gauges not included (change 12th character to "G" if required).**

Three-Unit Combo

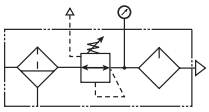

- 40 Micron Filter Element
- Manual Twist Drain
- Relieving Regulator
- 125 PSI (8.6 bar)

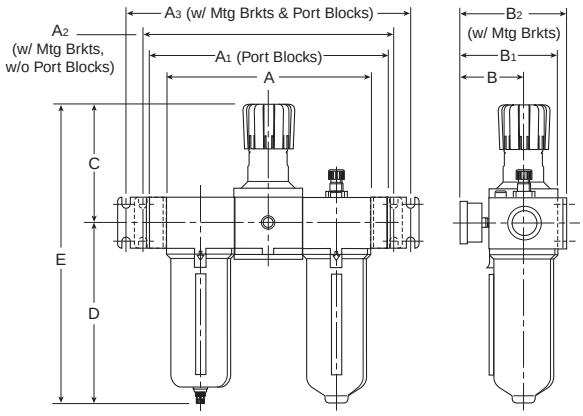

Series	Port	Model Numbers
P3NCB	3/4"	**P3NCB96SGMNNLNA**
	1"	**P3NCB98SGMNNLNA**
	1-1/2"†	**P3NCB9PSGMNNLNA**

Notes: All Combo part numbers are with regulator knob in up position.
† 1" Port Body with 1-1/2" Port Block.
For other models, refer to Ordering Information on next page.

A	A_1	A_2	A_3	B	B_1	B_2
10.87 (276)	13.15 (334)	13.46 (342)	15.75 (400)	3.62 (92)	5.20 (132)	5.74 (146)
C	**D**	**E**				
6.38 (162)	9.57 (243)	15.95 (405)				

Inches (mm)
- All dimensions nominal.
- **Mounting brackets not included (change last character in model number to "B" if required).**
- **Gauges not included (change 12th character to "G" if required).**

Parker Hannifin Corporation
Pneumatic Division
Richland, Michigan
www.parker.com/pneumatics

Modular Combinations – P3N Hi-Flow Series

Ordering Information

P3N	C	A	9	6	S	G	M	N	N	L	N	A

Series

Type
- **C Combination - Modular**

Combination
- Metal Bowl
- **A Hi-Flow 2-Unit**
- **B Hi-Flow 3-Unit**

Port Type
- 1 G Thread (BSPP) Female
- 2 Rc Thread (BSPT) Female
- **9 NPT Female**

Port Size
- **6 3/4" (w/o Port Blocks)**
- **8 1" (w/o Port Blocks)**
- **H 3/4" Port Blocks (w/ 3/4" Ported Body)**
- **M 1" Port Blocks (w/ 1" Ported Body)**
- **P 1-1/2" Port Blocks (w/ 1" Ported Body)**

Bowl
- **S Metal Bowl w/ Sight Gauge**

Filter Elements
- E 5 Micron
- **G 40 Micron**
- J 25 Micron, Porous Bronze

Filter Drains
- **M Twist Drain**
- A Automatic Float Drain

Relief
- **N Relieving**
- M Non-Relieving

Regulator Pressure Range & Gauges
- **Without Gauge**
- L 60 PSI (0 to 4 bar)
- **N 125 PSI (0 to 8 bar)**
- H 250 PSI (0 to 17 bar)
- **With Gauge**
- M 60 PSI (0 to 4 bar)
- G 125 PSI (0 to 8 bar)
- J 250 PSI (0 to 17 bar)

Lubricator Type
- Oil Mist
- **L w/ Polycarbonate Sight Dome**
- A w/ Nylon Sight Dome

Lubricator Drain / Fill Devices
- **N No Drain, Solid Bowl / Fill Plug**
- M Manual Twist Drain / Fill Plug
- A Automatic Fill / Fill Plug
- S Bowl Pressure Fill / Fill Plug
- H No Drain / Body Pressure Fill
- J Manual Twist Drain / Body Pressure Fill

Mounting Options
- **A No Brackets or Kits**
- B Wall Bracket

BOLD ITEMS ARE MOST POPULAR.

CAUTION:

REGULATOR PRESSURE ADJUSTMENT – The working range of knob adjustment is designed to permit outlet pressures within their full range. Pressure adjustment beyond this range is also possible because the knob is not a limiting device. This is a common characteristic of most industrial regulators, and limiting devices may be obtained only by special design.

For best performance, regulated pressure should always be set by increasing the pressure up to the desired setting.

⚠ WARNING

Product rupture can cause serious injury.
Do not connect regulator to bottled gas.
Do not exceed maximum primary pressure rating.

Kits & Accessories (See individual component sections for other kits and accessories.)

Port Block Kits: For Modular Combinations

	3/4"	1"	1-1/2"
NPT	P3NKB96CL	P3NKB98CL	P3NKB9BCL
BSPP	P3NKB16CL*	P3NKB18CL*	P3NKB1BCL*

* 3/4, 1 & 1-1/2 inch meet ISO 1179-1 Standard.

Wall Mounting Kit* P3NKA00MW

* If 1-1/2 BSPP E02 fittings are required, use P3NKA0BMW.

Parker Hannifin Corporation
Pneumatic Division
Richland, Michigan
www.parker.com/pneumatics

Modular Accessories – P3N Hi-Flow Series

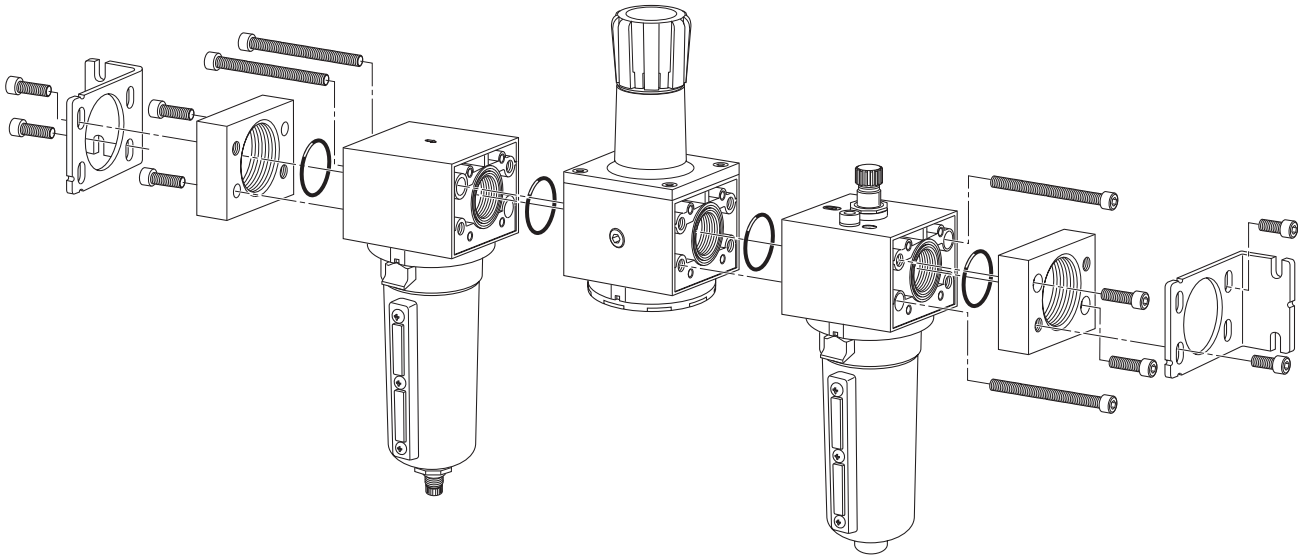

Mounting Brackets

P3NKA00MW

For 1-1/2" BSPP Port Block with E02 fitting application, use **Mounting Bracket Kit P3NKA0BMW**

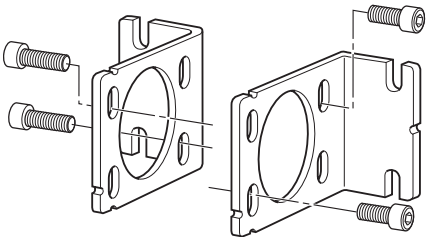

Replacement Body Covers

P3NKA00PM

Each Kit contains two covers.

All units are shipped with body covers.

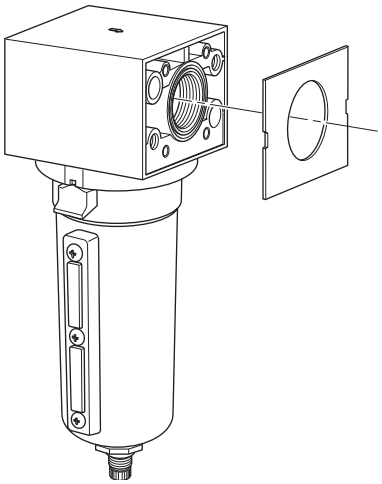

For modular combinations, one side has groove and the mating side is flat. Use the o-ring seal provided in the groove. For some modular combinations, both surfaces may have grooves. In those applications, use o-ring in one groove and square seal provided in the other.

Port Block Kits

	3/4"	1"	1-1/2"
Individual Filters, Individual Regulators and 2-Piece Filter and Regulator Assemblies:			
NPT	**P3NKB96CP**	**P3NKB98CP**	**P3NKB9BCP**
BSPP	**P3NKB16CP***	**P3NKB18CP***	**P3NKB1BCP***
2 and 3 Piece Combinations including a Lubricator (FR/L & FRL), Individual Lubricators, Individual Coalescing Filters and 2-Piece Filter and Coalescer Assemblies:			
NPT	**P3NKB96CL**	**P3NKB98CL**	**P3NKB9BCL**
BSPP	**P3NKB16CL***	**P3NKB18CL***	**P3NKB1BCL***

Port Block Kits allow units to be installed or removed as modular components.

Each Kit includes all the necessary pieces to make two port connections.

* 3/4, 1 & 1-1/2 inch meet ISO 1179-1 Standard.

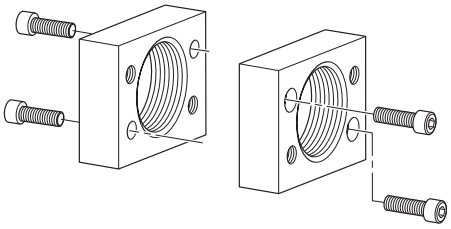

Parker Hannifin Corporation
Pneumatic Division
Richland, Michigan
www.parker.com/pneumatics

Standard Combinations – C628 Series

- See individual components for details.
- Gauges included on combinations.

Three-Unit Combo

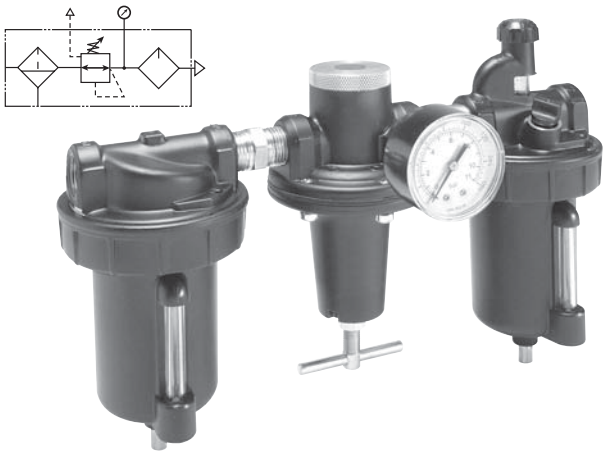

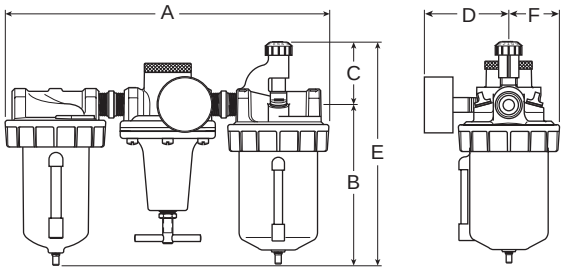

Series	Port	Model Numbers
C628	3/4"	**C628-06FRLWJCW**
	1"	**C628-08FRLWJCW**
	1-1/4"	**C628-10FRLWJCW**
	1-1/2"	**C628-12FRLWJCW**

For other models, refer to ordering information below.

A	B	C	D	E	F
C628-06FRL, C628-08FRL					
15.75 (400)	7.75 (197)	5.25 (133)	3.52 (89)	13.00 (330)	2.48 (63)
C628-10FRL, C628-12FRL					
16.50 (419)	8.13 (206)	6.00 (152)	3.86 (98)	14.13 (359)	2.64 (67)

Inches (mm)
• All dimensions nominal.

Ordering Information

C	628	—	06	FRL	W	J	C	W	

Port Size
- **06 3/4 Inch**
- **08 1 Inch**
- **10 1-1/4 Inch**
- **12 1-1/2 Inch**

Filter Bowl Options
- E 32 oz. Large Capacity wo/Sight Gauge
- **W 16 oz. Metal w/Sight Gauge**

Elements
- G 5 Micron
- **J 40 Micron**

Regulator Reduced Pressure Range
- **C 0-125 psig**
- D 0-250 psig

Drains and Options
- H Button Head Fill Fitting (Lubricator)
- K Non-Relieving Regulator
- Q External Heavy Duty Auto Drain (Filter)
- R Internal Auto Drain (Filter)
- X9 Manual Twist Drain on Lubricator (Increases Product Length by 9/16 Inch)

Lubricator Bowl Options
- E 32 oz. Large Capacity wo/Sight Gauge
- **W 16 oz. Metal w/Sight Gauge**

BOLD ITEMS ARE MOST POPULAR.

CAUTION:

REGULATOR PRESSURE ADJUSTMENT – The working range of knob adjustment is designed to permit outlet pressures within their full range. Pressure adjustment beyond this range is also possible because the knob is not a limiting device. This is a common characteristic of most industrial regulators, and limiting devices may be obtained only by special design.

For best performance, regulated pressure should always be set by increasing the pressure up to the desired setting.

⚠ WARNING

Product rupture can cause serious injury.
Do not connect regulator to bottled gas.
Do not exceed maximum primary pressure rating.

Parker Hannifin Corporation
Pneumatic Division
Richland, Michigan
www.parker.com/pneumatics

05S Soft Start / Quick Dump Valve

Features

- Combines Soft Start and Quick Dump Valve in the same body
- Large flow capacities up to 1.6 Cv
- Inline or Modular mounting
- Air Pilot or Solenoid operation
- Soft Start flow easily adjusted

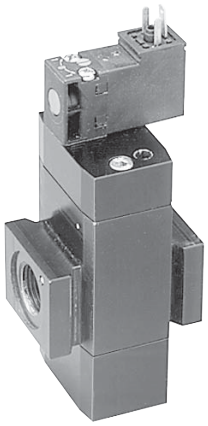

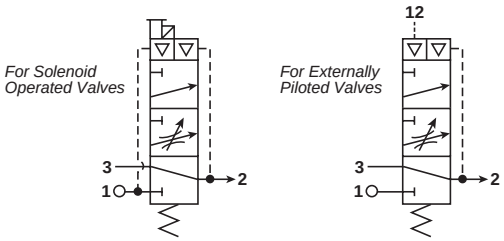

Operation

When the valve is installed into the pneumatic system and no pilot signal is received in port 12 the air is exhausted through port 3. When a pilot signal is received into port 12 the valve shifts closing the connection between ports 2 and 3. At the same time air flow begins between ports 1 and 2 at a slow rate controlled by the throttling control needle, located on the front of the valve. When the down stream pressure reaches approximately 60 PSIG (4 bar) the main valve spool opens allowing full flow through the valve into your system.

If there is a loss of pilot signal or system pressure at anytime the valve returns to it's initial state venting the down stream pressure through port 3.

The valves pilot signal can either be supplied as a pneumatic pilot directly piped into port 12, on the top of the valve, or through a solenoid pilot mounted on the head. The valve should be mounted downstream of the FRL and with the soft start adjustment needle easily accessible**.**

⚠ **CAUTION:** Do not use synthetic, reconstituted, or oils with an alcohol content or detergent additive.

⚠ **CAUTION:** Do not restrict the inlet of valves having an internal pilot supply. Pressure supply piping must be the same size as the inlet port or larger to insure that the pilot valve receives sufficient pressure supply during high flow conditions.

Ordering Information

05S	2	XX	*

Port Size
- **2 3/8 Inch**

Operator / Voltage
- **XX Air Pilot**
- **XP Air Pilot with Prestolok** 30-145 PSI
- 49 24VDC
- 53 120VAC

Engineering Level
- * Will be Entered at Factory

Note:
BSPP Available with Port Blocks Only,
Meets ISO 1179-1 Standard.

Parker Hannifin Corporation
Pneumatic Division
Richland, Michigan
www.parker.com/pneumatics

Performance Characteristics

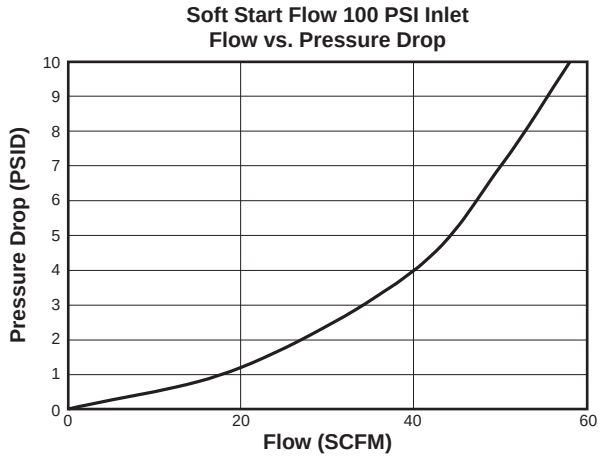

Table 1: Shows the relationship between the inlet pressure and downstream pressure at which the main valve opens.

Inlet Pressure psig	Downstream Pressure psig
75	50
100	55
125	60
150	65

Table 2: Product forward Flow Cv and Exhaust Flow Cv.

Series	Flow Cv	Exhaust Flow Cv
05S	1.3	1.6

Dimensions

Model	Port Size	A	B	C	D	E
05S	3/8"	5.26 (134)	2.13 (54)	2.10 (53)	3.86 (98)	1.65 (42)

Inches (mm)

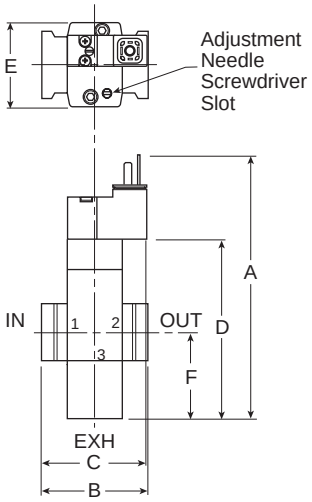

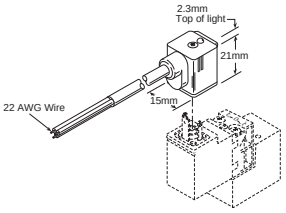

PS2946J79P

Kits & Accessories

3-Pin Female Connector Kit*† PS2932P

24VAC Lighted 3-Pin Connector Kit*† PS294679P

120/110VAC Lighted 3-Pin Connector Kit*† PS294683P

3-Pin Connector Kit, 24VAC or 24VDC w/6 Foot Cord* PS2946J79P

3-Pin Connector Kit, 120/110VAC w/6 Foot Cord* PS2946J83P

3/8" Exhaust Silencer (05S) ES37MB

* Conductors: 2 Poles Plus Ground
Contact Spacing: 8mm

† Cable Range: 6 to 8mm (0.24 to 0.31 Inch)

Specifications

Exhaust Port ..... 3/8 Inch

Port Threads – Inlet and Outlet Ports – ..... 3/8 inch
BSPP and BSPT port threads are available through the use of modular port block kits

Pressure & Temperature Ratings –

Solenoid – 60 to 150 psig (4.1 to 10.3 bar)
32°F to 140°F (0°C to 60°C)

Air Pilot – 60 to 150 psig (4.1 to 10.3 bar)
32°F to 160°F (0°C to 70°C)

Air Pilot with Prestolok Adaptor – 60 to 150 psig (4.1 to 10.3 bar)
32°F to 150°F (0°C to 65°C)

⚠ **CAUTION:** The actual maximum pressure and temperature ratings noted above for valves with Prestolok fittings, are dependent upon the type of tubing that is used.

Weight ..... 12.7 oz. (0.36 kg)

Materials of Construction

Body ..... Aluminum

Seals ..... Nitrile

Slide Rings ..... Lubricant Filled Thermoplastic

Springs ..... Stainless Steel

Parker Hannifin Corporation
Pneumatic Division
Richland, Michigan
www.parker.com/pneumatics

06S & 07S Soft Start / Quick Dump Valve

Features

- Combines Soft Start and Quick Dump Valve in the same body
- Large flow capacities up to 5.7 Cv
- Inline or Modular mounting
- Soft Start flow easily adjusted

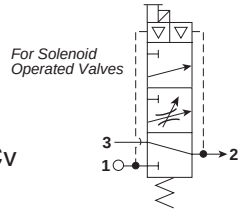

06S

07S

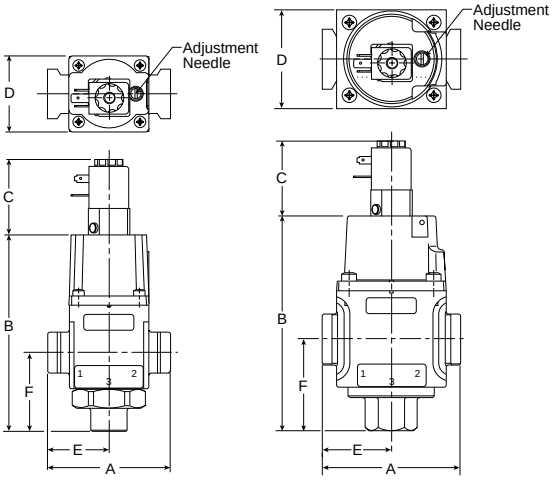

06S 07S

Dimensions:

Model	Port Size	A	B	C	D	E	F
06S	3/8"	3.36 (85)	5.40 (137)	2.07 (53)	2.08 (53)	1.68 (43)	2.17 (55)
07S	1/2"	3.81 (96)	5.96 (151)	2.07 (53)	2.74 (70)	1.91 (48)	2.54 (65)

Inches (mm)

Operation

When the valve is installed into the pneumatic system and pilot operator receives no signal, the air is blocked at Port 1. When a pilot signal is received at pilot operator, the valve shifts closing the connection between Ports 2 and 3. At the same time air flow begins between Ports 1 and 2 at a slow rate controlled by the needle valve located on the top of the valve. When the down stream pressure reaches approximately 60% of the supply pressure, the main valve spool opens allowing full flow through the valve into the system. If pilot signal or system pressure is lost, the valve returns to it's initial state venting the down stream pressure through Port 3.

Pressure supply piping must be the same size as the inlet port or larger to insure that the pilot valve receives sufficient pressure supply during high flow conditions.

The valves pilot signal is through a solenoid pilot mounted on the head. The valve should be mounted downstream of the FRL and with the soft start adjustment needle easily accessible.

⚠ **CAUTION:** Do not use synthetic, reconstituted, or oils with an alcohol content or detergent additive.

⚠ **CAUTION:** Do not restrict the inlet of valves.

Ordering Information

06S	2	53	*	—

Series

06S	**Soft Start / Quick Dump Valve**
07S	**Soft Start / Quick Dump Valve**

Port Size

2	**3/8 Inch (06S)**
3	**1/2 Inch (07S)**

Operator / Voltage

	30-145 PSI
49	**24VDC***
53	**120/60 Hz***
	145-200 PSI
69	**24VDC****
73	**120/60 Hz****
MD	**M12 Male Connector, 4 Pole; 24VDC**

* For Voltage Options 49 and 53, use 22mm connectors
** For Voltage Options 69 and 73, use 30mm connectors

Engineering Level

* Will be Entered at Factory

Thread Type / Label

Blank	**NPT**
1*	BSPP (G)

* 3/8 & 1/2 inch meet ISO 1179-1 Standard.

BOLD ITEMS ARE MOST POPULAR.

Parker Hannifin Corporation
Pneumatic Division
Richland, Michigan
www.parker.com/pneumatics

Performance Characteristics

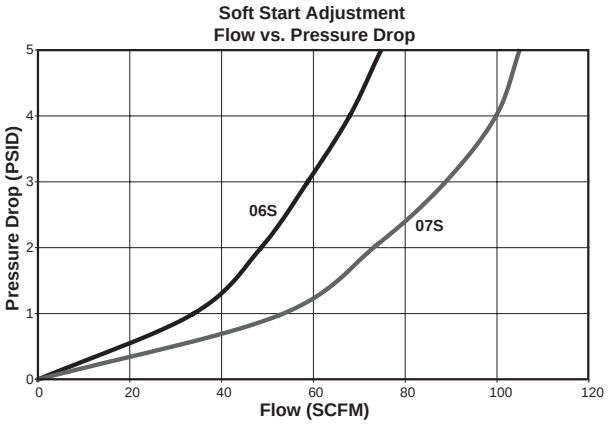

Table 1: Shows the relationship between the inlet pressure and downstream pressure at which the main valve opens.

Inlet Pressure psig	Downstream Pressure psig	
	06S	07S
75	55	52
100	67	68
125	80	82

Table 2: Product forward Flow Cv and Exhaust Flow Cv.

Series	Flow Cv	Exhaust Flow Cv
06S	4.1	3.4
07S	5.7	4.6

22mm Rectangular 3-Pin

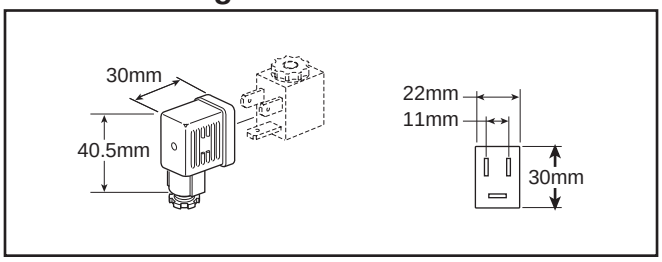

Connector	Connector with 6' (2m) Cord	Description
PS2429BP	PS2429JBP	Unlighted
PS243079BP	PS2430J79BP*	Light – 24VDC
PS243083BP	PS2430J83BP*	Light – 120V/60Hz

* LED with surge suppression.

Note: Max ø6.5mm cable size required for connector w/o 6' (2m) cord. IP65 rated when properly installed.

Engineering Data:
Conductors: 2 Poles Plus Ground; Cable Range (Connector Only): 6 to 8mm (0.24 to 0.31 Inch); Contact Spacing: 11mm

30mm Square 3-Pin

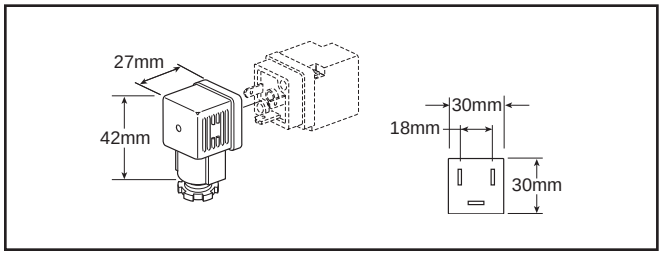

Connector	Connector with 6' (2m) Cord	Description
PS2028BP	PS2028JBP	Unlighted
PS203279BP	PS2032J79BP*	Light – 24VDC
PS203283BP	PS2032J83BP*	Light – 120V/60Hz

* LED with surge suppression.

Note: Max ø6.5mm cable size required for connector w/o 6' (2m) cord. IP65 rated when properly installed.

Engineering Data:
Conductors: 2 Poles Plus Ground; Cable Range (Connector Only): 8 to 10mm (0.31 to 0.39 Inch); Contact Spacing: 18mm

Kits & Accessories

06S Repair Kit PHRKSC75
07S Repair Kit PHRKSC105
06 Modular Body Connectors PS754P
07 Modular Body Connectors PS854P
1/2" Exhaust Silencer ES50MB
3/4" Exhaust Silencer ES75MB

Specifications

Exhaust Ports
06S ..... 1/2 Inch
07S ..... 3/4 Inch

Inlet and Outlet Ports
06S ..... 3/8 Inch
07S ..... 1/2 Inch

Maximum Pressure –
Standard Coil ..... 145 psig (10.0 bar)
High Pressure Coil ..... 200 psig (13.8 bar)

Minimum Operating Pressure ..... 30 psig (2.1 bar)

Temperature Ratings ..... 40°F to 120°F (4°C to 49°C)

Weight
06S ..... 2.25 lbs. (1.02 kg)
07S ..... 3.75 lbs. (1.70 kg)

Materials of Construction

Body ..... Aluminum
Bottom Plug ..... Brass

Connections

Central M12 Male Connector, 4 Pole

Pin Number		Function	Color
1	24V	Supply	Brown
2	0 to 10V or 4 to 20mA	Control Signal Ri = 100k Ω	White
3	0V (GND)	Supply	Blue
4	24V	Alarm Output Signal	Black

ISO 20401

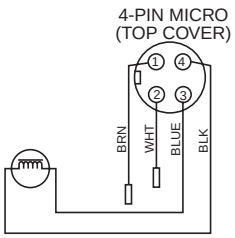

Parker Hannifin Corporation
Pneumatic Division
Richland, Michigan
www.parker.com/pneumatics

06T & 07T Solenoid Quick Dump Valve

Features

- Shuts off incoming pressure while rapidly exhausting downstream pressure
- Large exhaust flow capacities up to 5.0 Cv
- Solenoid operation
- Non-locking manual override
- Inline or Modular Mounting

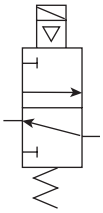

06T

07T

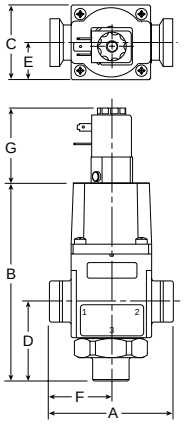

06T

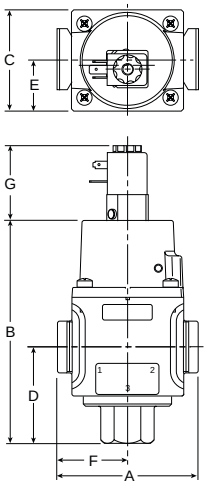

07T

Dimensions:

Model	Port Size	A	B	C	D	E	F	G	H
06T	3/8"	3.36 (85)	5.40 (137)	2.08 (53)	2.17 (26)	1.04 (43)	1.68 (43)	2.07 (53)	1.90 (48)
07T	1/2"	3.81 (96)	5.96 (151)	2.74 (70)	2.55 (65)	1.37 (35)	1.91 (48)	2.07 (53)	1.90 (48)

Inches (mm)

Operation

The solenoid quick dump valves are high flow, normally closed, 3-Port, 2-Position directional control valves. Upon energizing the solenoid, inlet air is applied to the top of the piston. The piston pushes against the spring and opens the main valve providing full flow air to the downstream. When the solenoid is de-energized, the main valve closes allowing downstream air to exhaust rapidly through the bottom plug. The bottom plug is tapped so that exhaust may be piped away or fitted with a muffler.

⚠ **CAUTION:** Do not use synthetic, reconstituted, or oils with an alcohol content or detergent additive.

⚠ **CAUTION:** Do not restrict the inlet of valves having an internal pilot supply. Pressure supply piping must be the same size as the inlet port or larger to insure that the pilot valve receives sufficient pressure supply during high flow conditions.

Ordering Information

06T	2	53	*	—

Series

06T	**Solenoid Quick Dump Valve**
07T	**Solenoid Quick Dump Valve**

Port Size

2	**3/8 Inch (06T)**
3	**1/2 Inch (07T)**

Operator / Voltage

	30-145 PSI
49	**24VDC***
53	**120/60 Hz***
	145-200 PSI
69	**24VDC****
73	**120/60 Hz****
MD	**M12 Male Connector, 4 Pole; 24VDC**

* For Voltage Options 49 and 53, use 22mm connectors
** For Voltage Options 69 and 73, use 30mm connectors

Engineering Level

*	Will be Entered at Factory

Thread Type / Label

Blank	**NPT**
1*	BSPP (G)

* 3/8 & 1/2 inch meet ISO 1179-1 Standard.

BOLD ITEMS ARE MOST POPULAR.

Parker Hannifin Corporation
Pneumatic Division
Richland, Michigan
www.parker.com/pneumatics

Performance Characteristics

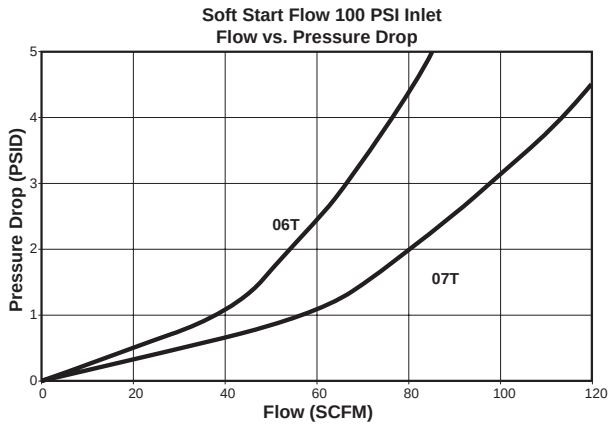

Table 2: Product forward Flow Cv (1 to 2).

Series	Flow Cv	Exhaust Flow Cv
06T	3.7	4.1
07T	5.5	5.0

22mm Rectangular 3-Pin

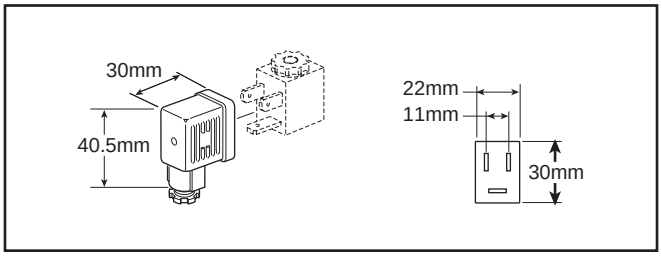

Connector	Connector with 6' (2m) Cord	Description
PS2429BP	PS2429JBP	Unlighted
PS243079BP	PS2430J79BP*	Light – 24VDC
PS243083BP	PS2430J83BP*	Light – 120V/60Hz

* LED with surge suppression.

Note: Max ø6.5mm cable size required for connector w/o 6' (2m) cord. IP65 rated when properly installed.

Engineering Data:
Conductors: 2 Poles Plus Ground; Cable Range (Connector Only): 6 to 8mm (0.24 to 0.31 Inch); Contact Spacing: 11mm

30mm Square 3-Pin

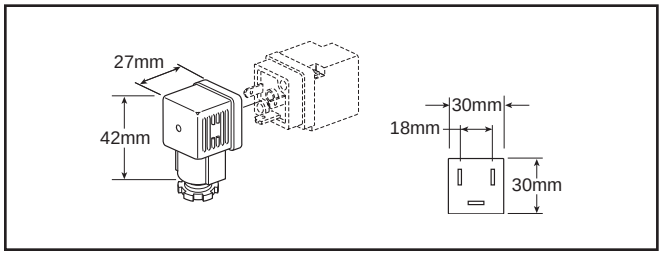

Connector	Connector with 6' (2m) Cord	Description
PS2028BP	PS2028JBP	Unlighted
PS203279BP	PS2032J79BP*	Light – 6-24VDC
PS203283BP	PS2032J83BP*	Light – 120V/60Hz

* LED with surge suppression.

Note: Max ø6.5mm cable size required for connector w/o 6' (2m) cord. IP65 rated when properly installed.

Engineering Data:
Conductors: 2 Poles Plus Ground; Cable Range (Connector Only): 8 to 10mm (0.31 to 0.39 Inch); Contact Spacing: 18mm

Kits & Accessories

06T Repair Kit PHRKS75
07T Repair Kit PHRKS105
06 Modular Body Connectors PS754P
07 Modular Body Connectors PS854P
1/2" Exhaust Silencer ES50MB
3/4" Exhaust Silencer ES75MB

Specifications

Exhaust Ports
06T ..... 1/2 Inch
07T ..... 3/4 Inch

Inlet and Outlet Ports
06T ..... 3/8 Inch
07T ..... 1/2 Inch

Maximum Pressure –
Standard Coil ..... 145 psig (10.0 bar)
High Pressure Coil ..... 200 psig (13.8 bar)

Minimum Operating Pressure ..... 30 psig (2.1 bar)

Temperature Ratings ..... 40°F to 120°F (4°C to 49°C)

Weight
06T ..... 2.25 lbs. (1.02 kg)
07T ..... 3.75 lbs. (1.70 kg)

Materials of Construction

Body ..... Aluminum
Bottom Plug ..... Brass

Connections

Central M12 Male Connector, 4 Pole

Pin Number		Function	Color
1	24V	Supply	Brown
2	0 to 10V or 4 to 20mA	Control Signal Ri = 100k Ω	White
3	0V (GND)	Supply	Blue
4	24V	Alarm Output Signal	Black

ISO 20401

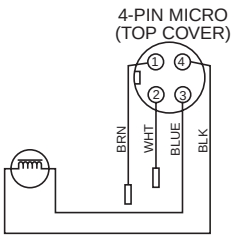

Parker Hannifin Corporation
Pneumatic Division
Richland, Michigan
www.parker.com/pneumatics

06P & 07P Auto Pilot Soft Start Valve

Features

- Smooth start-up of pneumatic system
- Air pilot operation
- Large flow capacities up to 5.5 Cv
- Inline or Modular Mounting

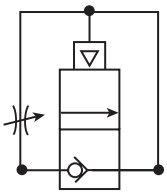

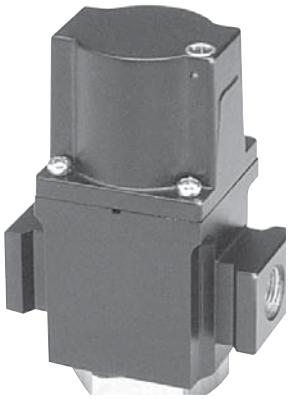

06P

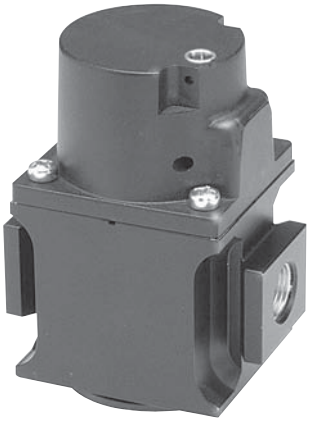

07P

Operation

When pressure is supplied to the inlet port, gradual filling of the downstream system occurs through the adjustable needle valve. The piston opens the main valve when the downstream side of the valve reaches approximately 60% of the supply pressure. The ramp up time to reach the switch over pressure is adjustable via the needle valve in the cover.

The Auto pilot soft start valve is not intended to be used as a shut off valve and should always be placed after a shut off valve.

⚠ **CAUTION:** Do not use synthetic, reconstituted, or oils with an alcohol content or detergent additive.

⚠ **CAUTION:** Do not restrict the inlet of valves having an internal pilot supply. Pressure supply piping must be the same size as the inlet port or larger to insure that the pilot valve receives sufficient pressure supply during high flow conditions.

Ordering Information

06P	2	*	—

Series

06P	**Auto Pilot Soft Start Valve**
07P	**Auto Pilot Soft Start Valve**

Port Size

2	**3/8 Inch (06P)**
3	**1/2 Inch (07P)**

Engineering Level

*	Will be Entered at Factory

Thread Type / Label

Blank	**NPT**
1*	BSPP (G)

* 3/8 & 1/2 inch meet ISO 1179-1 Standard.

BOLD ITEMS ARE MOST POPULAR.

Parker Hannifin Corporation
Pneumatic Division
Richland, Michigan
www.parker.com/pneumatics

Performance Characteristics

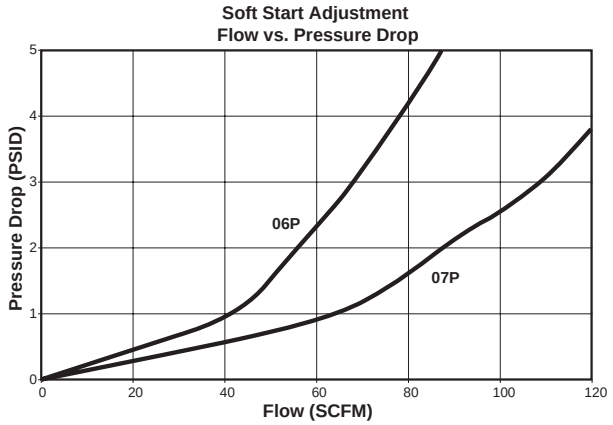

Table 1: Shows the relationship between the inlet pressure and downstream pressure at which the main valve opens.

Inlet Pressure psig	Downstream Pressure psig	
	06P	07P
75	45	25
100	60	33
125	75	38
150	85	45

Table 2: Product forward Flow Cv (1 to 2).

Series	Flow Cv
06P	3.8
07P	5.5

Dimensions:

Model	Port Size	A	B	C	D	E	F
06P	3/8"	3.36 (85)	4.70 (119)	2.08 (53)	1.48 (38)	1.04 (26)	1.68 (43)
07P	1/2"	3.81 (96)	5.21 (132)	2.07 (53)	1.80 (46)	1.37 (35)	1.91 (48)

Inches (mm)

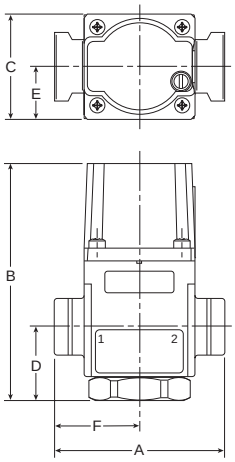

06P

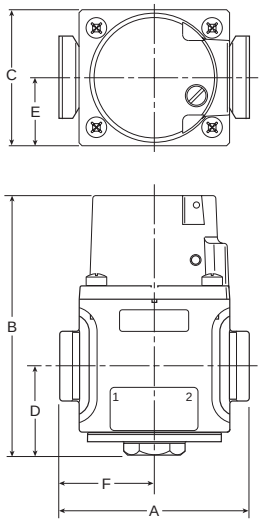

07P

Repair Kits

06P Repair Kit PHRKSS75
07P Repair Kit PHRKSS105
06 Modular Body Connectors PS754P
07 Modular Body Connectors PS854P

Materials of Construction

Body ..... Aluminum
Bottom Plug –
06P ..... Brass
07P ..... Zinc

Specifications

Maximum Pressure ..... 300 psig (20.7 bar)
Minimum Operating Pressure ..... 30 psig (2.1 bar)
Temperature Ratings ..... 40°F to 120°F (4°C to 49°C)
Opens to Full Flow ..... 60% Supply Pressure
Weight –
06P ..... 2.75 lb. (1.25 kg)
07P ..... 4.50 lb. (2.04 kg)

Parker Hannifin Corporation
Pneumatic Division
Richland, Michigan
www.parker.com/pneumatics

Mounting Bracket Kits

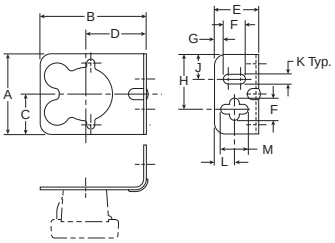

PS417BP
(Includes Panel Mount Nut)

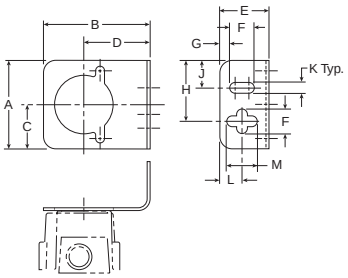

PS419
(Includes Panel Mount Nut)

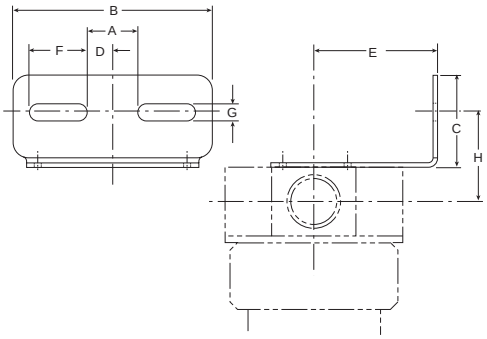

PS743P, PS843P

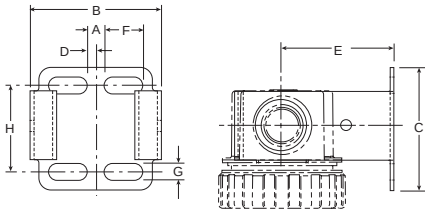

PS943P

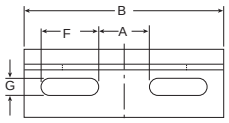

PS707P & PS807P
(Includes Panel Mount Nut)

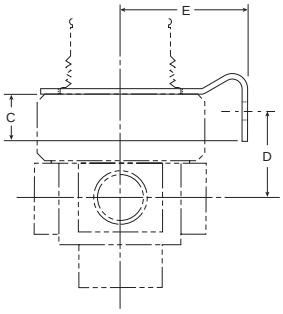

PS963P
(Includes Aluminum Panel Mount Nut)

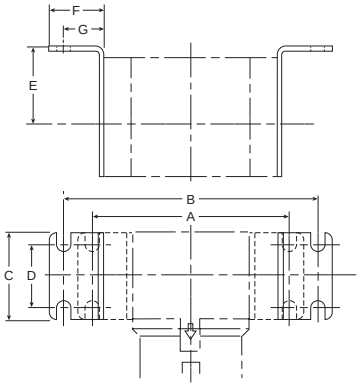

P3NKA00MW

Dimensions

A	B	C	D	E	F	G	H	J	K	L	M	Kit
1.80 (46)	2.37 (60)	0.90 (23)	1.35 (34)	1.00 (25)	0.50 (13)	0.20 (5)	1.24 (31)	0.56 (14)	0.22 (6)	0.45 (11)	0.62 (16)	**PS417BP** (10F, 14F, P3A, 14R, 14E)
1.80 (46)	2.17 (55)	0.90 (23)	1.35 (34)	1.00 (25)	0.50 (13)	0.20 (5)	1.24 (31)	0.56 (14)	0.22 (6)	0.45 (11)	0.62 (16)	**PS419** (04L)
0.84 (21)	3.25 (83)	1.50 (38)	0.42 (11)	2.00 (51)	0.94 (24)	0.28 (7)	1.44 (37)	—	—	—	—	**PS743P** (06F, 11F, 06L, 16L)
1.00 (25)	3.94 (100)	1.57 (40)	0.50 (13)	2.19 (56)	1.25 (32)	0.28 (7)	1.68 (43)	—	—	—	—	**PS843P** (07F, 12F, 07L, 17L)
0.28 (7)	2.12 (54)	2.00 (51)	0.14 (4)	1.85 (47)	0.63 (16)	0.28 (7)	1.41 (36)	—	—	—	—	**PS943P** (05F, 15F, 15L)
0.84 (21)	2.59 (66)	0.49 (12)	1.02 (26)	1.85 (47)	0.61 (15)	0.28 (7)	—	—	—	—	—	**PS963P** (05R, 10R, 05E, 27E)
0.84 (21)	3.26 (83)	0.77 (20)	1.46 (37)	2.00 (51)	0.94 (24)	0.28 (7)	—	—	—	—	—	**PS707P** (06R, 06E, 11R)
1.00 (25)	3.94 (100)	0.65 (17)	1.68 (43)	2.19 (56)	1.25 (32)	0.28 (7)	—	—	—	—	—	**PS807P** (07R, 07E, 12R)
6.22 (158)	8.19 (208)	2.75 (70)	1.97 (50)	2.36 (60)	1.77 (45)	1.30 (33)	—	—	—	—	—	**P3NKA00MW** (P3NF, P3NR, P3NE, P3NL)

inches (mm)

Parker Hannifin Corporation
Pneumatic Division
Richland, Michigan
www.parker.com/pneumatics

Stainless Steel FRLs

Air Preparation Units

Section D

www.parker.com/pneu/ssfrls

Product Selection Chart D3

Air Line Filters
- Miniature PF504 ..... D4-D5
- Standard PF10 ..... D6-D7

Air Line Coalescing Filters
- Miniature PF501 ..... D8-D9
- Standard PF11 ..... D10-D11

Air Line Regulators
- Miniature PR354, PR364 ..... D12-D13
- Standard PR10, PR11 ..... D14-D15

Filter / Regulator
- Miniature PB548, PB558 ..... D16-D17
- Standard PB11, PB12 ..... D18-D19

Air Line Lubricators
- Standard PL10 ..... D20-D21

BOLD ITEMS ARE MOST POPULAR.

Parker Hannifin Corporation
Pneumatic Division
Richland, Michigan
www.parker.com/pneumatics

Notes

Parker Hannifin Corporation
Pneumatic Division
Richland, Michigan
www.parker.com/pneumatics

Product Selection Chart

Basic Unit	Series	Port Size		Bowls	Capacity	Elements (Micron)			Page
		1/4	1/2			5	20	40	
FILTERS	PF504	X	—	316 Stainless Steel	1 oz.	Opt.	Std.	—	D4-D5
	PF10	—	X	316 Stainless Steel	4 oz.	Opt.	—	Std.	D6-D7
COALESCING FILTERS	PF501	X	—	316 Stainless Steel	1 oz.	.3 Micron			D8-D9
	PF11	—	X	316 Stainless Steel	4 oz.	.3 Micron			D10-D11

Basic Unit	Series	Port Size		Spring Range				Page
		1/4	1/2	25	60	125	250	
REGULATORS	PR354	X	—	Std.	Std.	Std.	—	D12-D13
	PR364	X	—	Std.	Std.	Std.	—	
	PR10	—	X	—	Std.	Std.	Opt.	D14-D15
	PR11	—	X	—	Std.	Std.	Opt.	

Basic Unit	Series	Port Size		Bowls	Capacity	Elements (Micron)			Spring Range				Page
		1/4	1/2			5	20	40	25	60	125	250	
FILTER / REGULATORS	PB548	X	—	316 Stainless Steel	1 oz.	Opt.	Std.	—	Opt.	Opt.	Std.	—	D16-D17
	PB558	X	—	316 Stainless Steel	1 oz.	Opt.	Std.	—	Opt.	Opt.	Std.	—	
	PB11	—	X	316 Stainless Steel	4 oz.	Opt.	—	Std.	—	Opt.	Std.	Opt.	D18-D19
	PB12	—	X	316 Stainless Steel	4 oz.	Opt.	—	Std.	—	Opt.	Std.	Opt.	
LUBRICATORS	PL10	—	X	316 Stainless Steel	4 oz.	Can be filled under pressure							D20-D21

Parker Hannifin Corporation
Pneumatic Division
Richland, Michigan
www.parker.com/pneumatics

PF504 Filter – Miniature

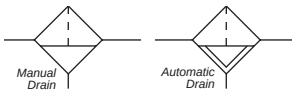

Features

- Stainless steel construction handles most corrosive environments.
- Fluorocarbon seals standard.
- Meets NACE specifications MR-01-75/ISO 15156.
- 1/8" female threaded drain.
- High Flow: 1/4" - 23 SCFM§

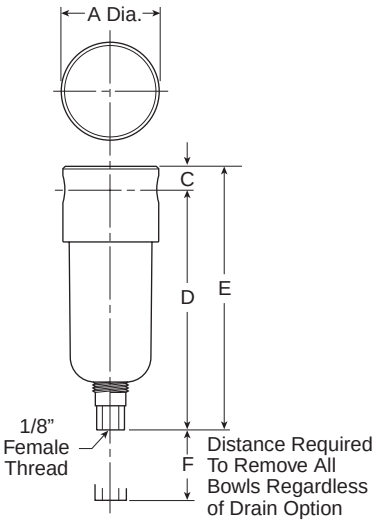

Port Size	NPT	BSPP
	Manual Twist Drain	Manual Twist Drain
1/4"	**PF504-02DHSS**	PF504G02DHSS

Standard part numbers shown bold.
For other models refer to ordering information below.

SCFM = Standard cubic feet per minute at 90 PSIG inlet and 5 PSIG pressure drop.

PF504 Filter Dimensions		
A 1.56 (40)	**C** 0.31 (8)	**D** 3.69 (94)
E 4.00 (102)	**F** 1.58 (40)	

inches (mm)

Ordering Information

PF504	-	02	D	H		SS

Port Type
- **- NPT**
- G BSPP

Port Size
- **02 1/4 Inch**

Bowl
- **D Metal Bowl without Sight Gauge**

Element
- **H 20 Micron**
- G 5 Micron

Options
- **Blank Manual Twist Drain**
- R Automatic Pulse Drain

Material
- **SS Stainless Steel**

BOLD ITEMS ARE MOST POPULAR.

Parker Hannifin Corporation
Pneumatic Division
Richland, Michigan
www.parker.com/pneumatics

Operation

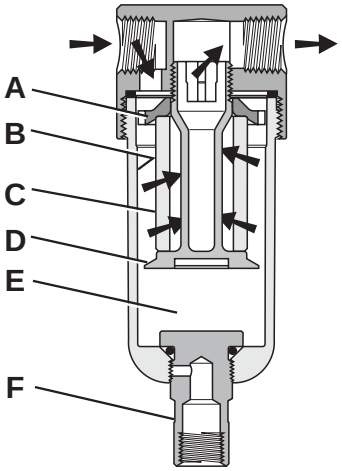

First Stage Filtration:
Air enters at inlet port and flows through deflector plate **(A)** which causes a swirling action. Liquids and coarse particles are forced to the bowl interior wall **(B)** by the centrifugal action of the swirling air. They are then carried down the bowl wall by the force of gravity. The baffle **(D)** separates the lower portion of the bowl into a "quiet zone" **(E)** where the removed liquid and particles collect, unaffected by the swirling air, and are therefore not reentrained into the flowing air.

Second Stage Filtration:
After liquids and large particles are removed in the first stages of filtration, the air flows through element **(C)** where smaller particles are filtered out. The filtered air then passes downstream. Collected liquids and particles in the "quiet zone" **(E)** should be drained before their level reaches a height where they would be reentrained in the flowing air. This can be accomplished by unscrewing the drain valve **(F)** slightly until the liquid begins to drain.

Technical Information

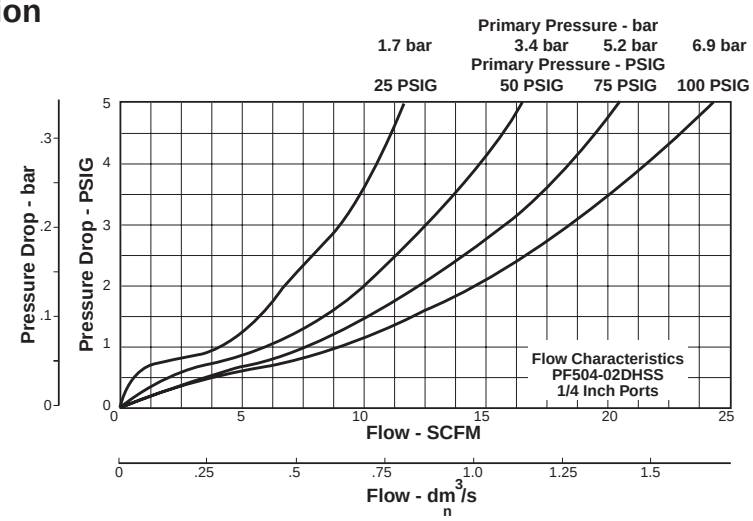

PF504 Filter Kits & Accessories

Drain Kits –
Automatic Pulse Drain RK504SY-SS
Manual Twist Drain–
Small (Old) SA600Y7-1SS
Large (New) SAP05481

Filter Element Kits –
Particulate (5 Micron) EK504VY
Particulate (20 Micron) EK504Y

Pipe Nipple –
1/4" 316 Stainless Steel 616Y28-SS

Specifications

Bowl Capacity ..... 1.0 Ounces
Filter Rating ..... 20 Micron
Sump Capacity ..... 0.4 Ounce
Port Threads ..... 1/4 Inch

Pressure & Temperature Ratings –
Manual Twist Drain ..... 0 to 300 PSIG (0 to 20.7 bar)
0°F to 180°F (-18°C to 82°C)
Auto Pulse Drain..... 10 to 175 PSIG (0 to 12 bar)
32°F to 150°F (0°C to 66°C)

Note: Air must be dry enough to avoid ice formation at temperatures below 32°F (0°C)

Weight ..... 0.6 lb. (0.27 kg)

Materials of Construction

Body ..... 316 Stainless Steel
Bowls ..... 316 Stainless Steel
Deflector ..... Acetal
Drain ..... 316 Stainless Steel
Element Holder ..... Acetal
Filter Element ..... Polyethylene
Seals ..... Fluorocarbon

Parker Hannifin Corporation
Pneumatic Division
Richland, Michigan
www.parker.com/pneumatics

PF10 Filter – Standard

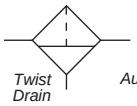

Features

- Stainless steel construction handles most corrosive environments.
- Meets NACE specifications MR-01-75/ISO 15156.
- 1/8" female threaded drain.
- High Flow: 1/2" - 70 SCFM§

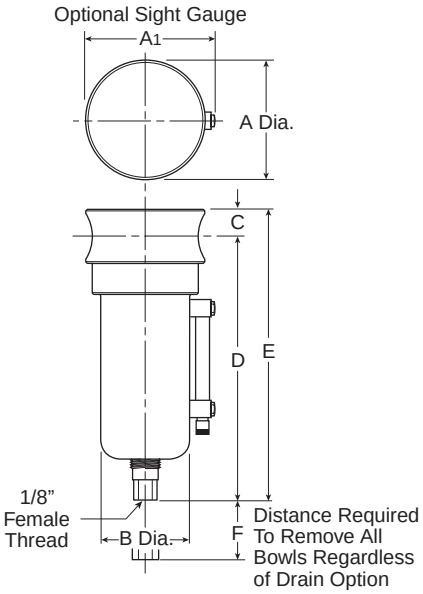

Port Size	NPT		BSPP	
	Manual Twist Drain	Automatic Float Drain	Manual Twist Drain	Automatic Float Drain
1/2"	**PF10-04WJSS**	**PF10-04WJRSS**	PF10G04WJSS	PF10G04WJRSS

Standard part numbers shown bold.
For other models refer to ordering information below.

SCFM = Standard cubic feet per minute at 90 PSIG inlet and 5 PSIG pressure drop.

PF10 Filter Dimensions		
A 2.38 (60)	**A1** 2.50 (64)	**B** 1.75 (44)
C .56 (14)	**D** 5.00 (127)	**E** 5.56 (141)
F 2.12 (54)		

inches (mm)

Ordering Information

PF10	-	04	W	J		SS

Port Type
- **- NPT**
- G BSPP

Port Size
- **04 1/2 Inch**

Bowl
- D Metal Bowl without Sight Gauge
- **W Metal Bowl with Sight Gauge**

Element
- **J 40 Micron**
- G 5 Micron

Options
- **Blank Manual Twist Drain**
- R Automatic Float Drain

Material
- **SS Stainless Steel**

BOLD ITEMS ARE MOST POPULAR.

Parker Hannifin Corporation
Pneumatic Division
Richland, Michigan
www.parker.com/pneumatics

Operation

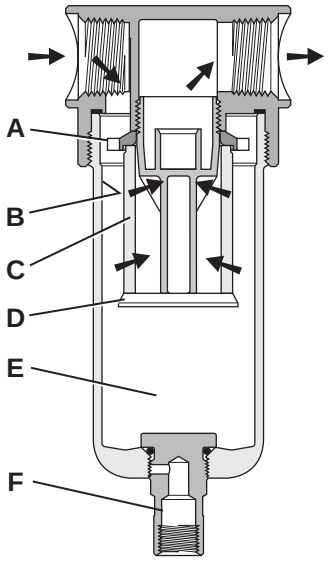

First Stage Filtration:
Air enters at inlet port and flows through deflector plate **(A)** which causes a swirling action. Liquids and coarse particles are forced to the bowl interior wall **(B)** by the centrifugal action of the swirling air. They are then carried down the bowl wall by the force of gravity. The baffle **(D)** separates the lower portion of the bowl into a "quiet zone" **(E)** where the removed liquid and particles collect, unaffected by the swirling air, and are therefore not reentrained into the flowing air.

Second Stage Filtration:
After liquids and large particles are removed in the first stages of filtration, the air flows through element **(C)** where smaller particles are filtered out. The filtered air then passes downstream. Collected liquids and particles in the "quiet zone" **(E)** should be drained before their level reaches a height where they would be reentrained in the flowing air. This can be accomplished by unscrewing the drain valve **(F)** slightly until the liquid begins to drain.

Technical Information

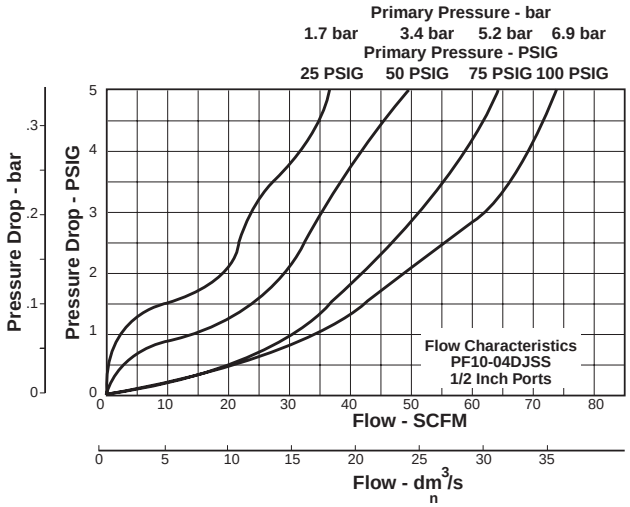

PF10 Filter Kits & Accessories

Drain Kit –
Automatic Float Drain SA10MDSS
Manual Twist Drain–
Small (Old) SA600Y7-1SS
Large (New) SAP05481

Filter Element Kits –
Particulate (40 Micron) EK55J
Particulate (5 Micron) EK55G

Pipe Nipple – 1/2" 316 Stainless Steel 616A28-SS

Specifications

Bowl Capacity ..... 4.0 Ounces

Filter Rating ..... 40 Micron

Sump Capacity ..... 1.7 Ounce

Port Threads ..... 1/2 Inch

Pressure & Temperature Ratings –
Manual Twist Drain (D) ..... 0 to 300 PSIG (0 to 20.7 bar)
0°F to 180°F (-18°C to 82°C)
Manual Twist Drain (W) ..... 0 to 250 PSIG (0 to 17.2 bar)
0°F to 150°F (-18°C to 66°C)
Automatic Float Drain ..... 10 to 175 PSIG (0 to 12 bar)
32°F to 150°F (0°C to 66°C)

Note: Air must be dry enough to avoid ice formation at temperatures below 32°F (0°C)

Weight ..... 1.9 lb. (0.85 kg)

Materials of Construction

Body ..... 316 Stainless Steel

Bowls ..... 316 Stainless Steel

Deflector ..... Acetal

Drain ..... 316 Stainless Steel

Element Holder ..... Acetal

Filter Element ..... Polyethylene

Seals ..... Fluorocarbon

Sight Gauge ..... Isoplast

Parker Hannifin Corporation
Pneumatic Division
Richland, Michigan
www.parker.com/pneumatics

PF501 Coalescing Filter – Miniature

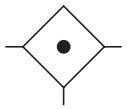

Features

- Stainless steel construction handles most corrosive environments.
- Meets NACE specifications MR-01-75/ISO 15156.
- 1/8" female threaded drain.
- High Flow: 1/4" - 16 SCFM§

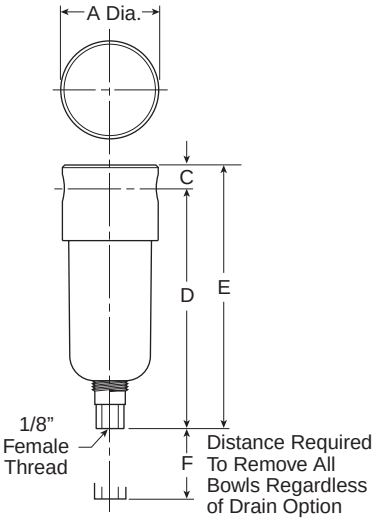

Port Size	NPT	BSPP
	Manual Twist Drain	Manual Twist Drain
1/4"	**PF501-02DHSS**	PF501G02DHSS

Standard part numbers shown bold. For other models refer to ordering information below.

SCFM = Standard cubic feet per minute at 90 PSIG inlet and 5 PSIG pressure drop.

PF501 Coalescing Filter Dimensions		
A 1.56 (40)	**C** 0.31 (8)	**D** 3.69 (94)
E 4.00 (102)	**F** 1.58 (40)	

inches (mm)

Ordering Information

PF501	-	02	D	H		SS

Port Type
- **- NPT**
- G BSPP

Port Size
- **02 1/4 Inch**

Bowl
- **D Metal Bowl without Sight Gauge**

Element
- **H .3 Micron**

Options
- **Blank Manual Twist Drain**
- R Automatic Pulse Drain

Material
- **SS Stainless Steel**

BOLD ITEMS ARE MOST POPULAR.

Parker Hannifin Corporation
Pneumatic Division
Richland, Michigan
www.parker.com/pneumatics

Operation

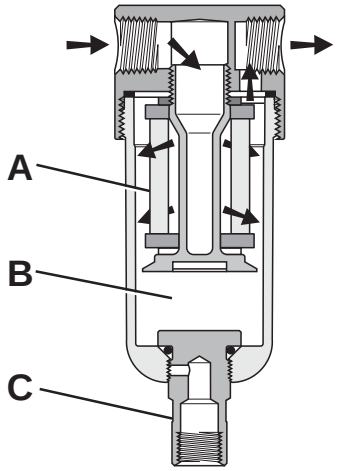

The contaminated air enters the element interior and is forced through a thick membrane **(A)** of "borosilicate" glass fibers coated with epoxy. Flow then passes through the element, and at this stage 99.97% of the sub micronic particles have been removed from the air stream. The tiny droplets coalesce together and are collected from the filter element by the outer drain layer.
The clean, filtered air now passes through and out into the pneumatic system. The air line coalescing filter removes liquid aerosols and sub-micron particulate matter.
Collected liquids and particles in the "quiet zone" **(B)** should be drained before their level reaches a height where they would be reentrained in the flowing air. This can be accomplished by unscrewing the drain valve **(C)** slightly until the liquid begins to drain.

Technical Information

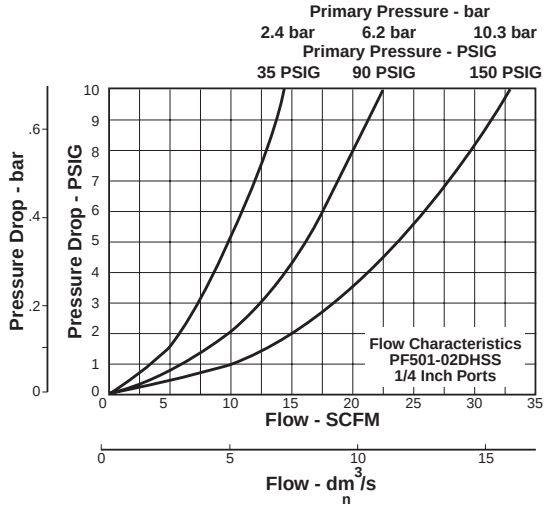

PF501 Filter Kits & Accessories

Drain Kits –
Automatic Pulse Drain RK504SY-SS
Manual Twist Drain –
Small (Old) SA600Y7-1SS
Large (New) SAP05481

Filter Element Kits –
0.3 Micron EKF501H

Pipe Nipple –
1/4" 316 Stainless Steel 616Y28-SS

Specifications

Bowl Capacity ..... 1.0 Ounces
Filter Rating ..... 0.3 Micron
Port Threads ..... 1/4 Inch

Pressure & Temperature Ratings –
Manual Twist Drain ..... 0 to 300 PSIG (0 to 20.7 bar)
0°F to 180°F (-18°C to 82°C)
Auto Pulse Drain ..... 10 to 175 PSIG (0 to 12 bar)
32°F to 150°F (0°C to 66°C)

Note: Air must be dry enough to avoid ice formation at temperatures below 32°F (0°C)

Sump Capacity ..... 0.4 Ounce
Weight ..... 0.6 lb. (0.27 kg)

Materials of Construction

Body ..... 316 Stainless Steel
Bowls ..... 316 Stainless Steel
Drain ..... 316 Stainless Steel
Element Holder ..... Acetal
Filter Element ..... Borosilicate Fiber
Seals ..... Fluorocarbon

Parker Hannifin Corporation
Pneumatic Division
Richland, Michigan
www.parker.com/pneumatics

PF11 Coalescing Filter – Standard

Features

- Stainless steel construction handles most corrosive environments.
- Meets NACE specifications MR-01-75/ISO 15156.
- 1/8" female threaded drain.
- High Flow: 1/2" - 45 SCFM§

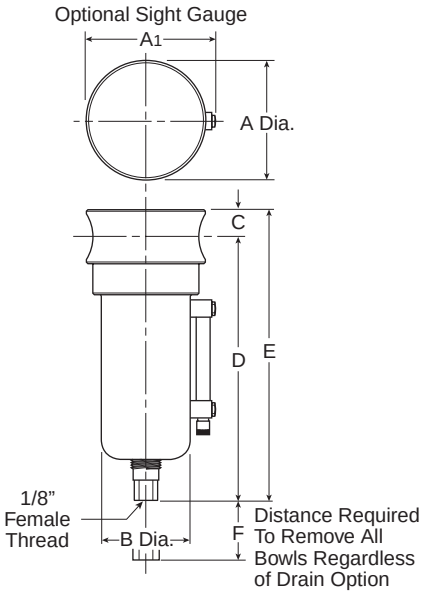

Port Size	NPT		BSPP	
	Manual Twist Drain	Automatic Float Drain	Manual Twist Drain	Automatic Float Drain
1/2"	Metal Bowl With Sight Gauge			
	PF11-04WJSS	**PF11-04WJRSS**	PF11G04WJSS	PF11G04WJRSS

Standard part numbers shown bold. For other models refer to ordering information below.

SCFM = Standard cubic feet per minute at 90 PSIG inlet and 5 PSIG pressure drop.

PF11 Coalescing Filter Dimensions		
A 2.38 (60)	**A1** 2.50 (64)	**B** 1.75 (44)
C 0.56 (14)	**D** 5.00 (127)	**E** 5.56 (141)
F 2.12 (54)		

inches (mm)

Ordering Information

PF11	-	04	W	J		SS

Port Type
- **- NPT**
- G BSPP

Port Size
- **04 1/2 Inch**

Bowl
- D Metal Bowl without Sight Gauge
- **W Metal Bowl with Sight Gauge**

Element
- **J .01 Micron**

Options
- **Blank Manual Twist Drain**
- R Automatic Float Drain

Material
- **SS Stainless Steel**

BOLD ITEMS ARE MOST POPULAR.

Parker Hannifin Corporation
Pneumatic Division
Richland, Michigan
www.parker.com/pneumatics

Operation

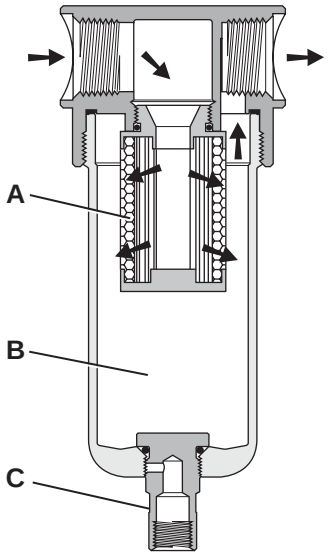

The contaminated air enters the element interior and is forced through a thick membrane **(A)** of "borosilicate" glass fibers coated with epoxy. Flow then passes through the element, and at this stage 99.97% of the sub micronic particles have been removed from the air stream. The tiny droplets coalesce together and are collected from the filter element by the outer drain layer.
The clean, filtered air now passes through and out into the pneumatic system. The air line coalescing filter removes liquid aerosols and sub-micron particulate matter.
Collected liquids and particles in the "quiet zone" **(B)** should be drained before their level reaches a height where they would be reentrained in the flowing air. This can be accomplished by unscrewing the drain valve **(C)** slightly until the liquid begins to drain.

Technical Information

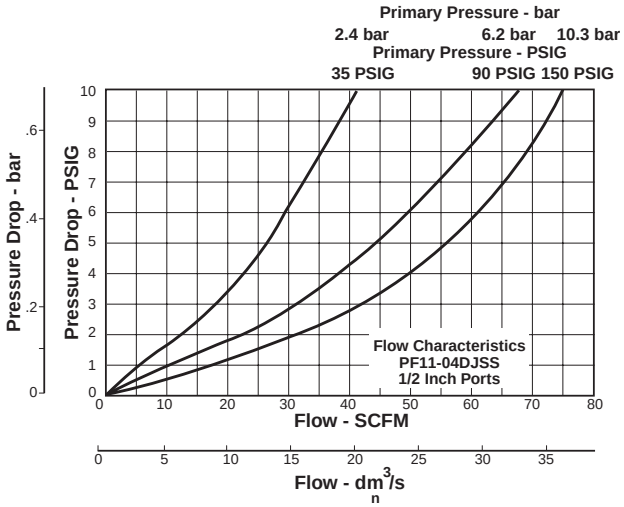

PF11 Filter Kits & Accessories

Drain Kits –
Automatic Float Drain SA10MDSS

Filter Element Kits –
0.01 Micron EKF71

Pipe Nipple –
1/2" 316 Stainless Steel 616A28-SS

Specifications

Bowl Capacity ..... 4.0 Ounces

Filter Rating ..... 0.01 Micron

Sump Capacity ..... 1.7 Ounce

Port Threads ..... 1/2 Inch

Pressure & Temperature Ratings –
Manual Twist Drain ..... 0 to 300 PSIG (0 to 20.7 bar)
0°F to 180°F (-18°C to 82°C)

Manual Twist Drain (W) ..... 0 to 250 PSIG (0 to 17.2 bar)
0°F to 150°F (-18°C to 66°C)

Automatic Float Drain ..... 10 to 175 PSIG (0 to 12 bar)
32°F to 150°F (0°C to 66°C)

Note: Air must be dry enough to avoid ice formation at temperatures below 32°F (0°C)

Weight ..... 1.9 lb. (0.85 kg)

Materials of Construction

Body ..... 316 Stainless Steel

Bowls ..... 316 Stainless Steel

Drain ..... 316 Stainless Steel

Element Holder ..... Acetal

Filter Element ..... Borosilicate Fiber

Seals ..... Fluorocarbon

Sight Gauge ..... Isoplast

Parker Hannifin Corporation
Pneumatic Division
Richland, Michigan
www.parker.com/pneumatics

PR354, PR364 Regulator – Miniature

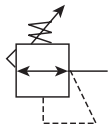

Features

- Stainless steel construction handles most corrosive environments.
- Large diaphragm to valve area ratio for precise regulation and high flow capacity.
- Meets NACE specifications MR-01-75/ISO 15156.
- High Flow: 1/4" – 12 SCFM§

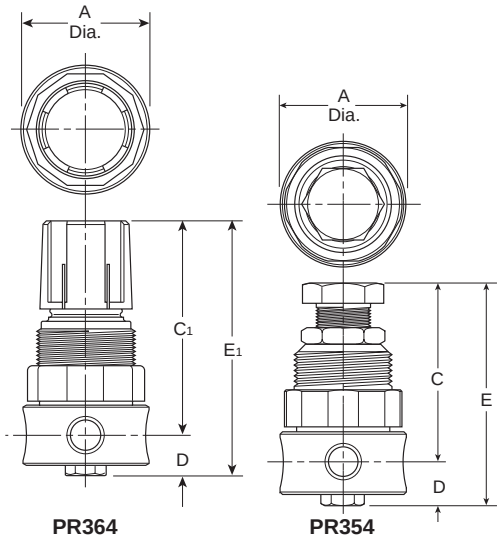

PR364

PR354

Series	Adjustment Type	Port Size	NPT	BSPP
PR364	Knob	1/4"	**PR364-02CSS**	PR364G02CSS
PR354	All Metal	1/4"	**PR354-02CSS**	PR354G02CSS

Standard part numbers shown bold. For other models refer to ordering information below.

§ SCFM = Standard cubic feet per minute at 100 PSIG inlet, 75 PSIG no flow secondary setting and 15 PSIG pressure drop.

PR354, PR364 Regulator Dimensions		
A	**C**	**C_1**
1.56 (40)	2.00 (51)	2.56 (65)
D	**E**	**E_1**
0.50 (13)	2.50 (64)	3.06 (78)

inches (mm)
NOTE: 1.25 Dia. (32mm) hole required for panel mounting.

⚠ WARNING

Product rupture can cause serious injury.
Do not connect regulator to bottled gas.
Do not exceed maximum primary pressure rating.

Ordering Information

PR364	-	02	C		SS

Series
- **PR354 Stainless Steel**
- **PR364 Standard Knob**

Port Type
- **- NPT**
- G BSPP

Port Size
- **02 1/4 Inch**

Pressure Range
- A 0-25 PSIG (0-1.7 bar)
- B 0-60 PSIG (0-4.1 bar)
- **C 0-125 PSIG (0-8.5 bar)**

Options
- **Blank Relieving**
- K Non-Relieving
- P Panel Mount Nut

Material
- **SS Stainless Steel**

BOLD ITEMS ARE MOST POPULAR.

Parker Hannifin Corporation
Pneumatic Division
Richland, Michigan
www.parker.com/pneumatics

Operation

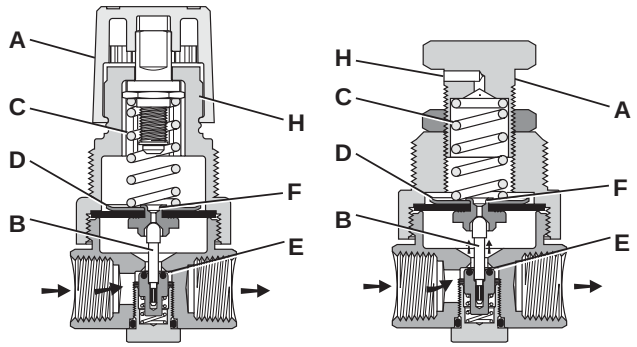

PR364 **PR354**

With the adjusting knob **(A)** turned fully counter-clockwise (no spring load), and pressure supplied to the regulator inlet port, the valve poppet assembly **(B)** is closed. Turning the adjusting knob clockwise applies a load to control spring **(C)**. This load causes the diaphragm **(D)** and the valve poppet assembly **(B)** to move downward allowing flow across the seat area **(E)** created between the poppet assembly and the seat. Pressure in the downstream line is sensed below the diaphragm **(D)** and offsets the load of spring **(C)**. As downstream pressure rises, poppet assembly **(B)** and diaphragm **(D)** move upward until the area **(E)** is closed and the load of the spring **(C)** and pressure under diaphragm **(D)** are in balance. A reduced outlet pressure has now been obtained, depending on spring load. Creating a demand downstream, such as opening a valve, results in a reduced pressure under the diaphragm **(D)**. The load of control spring **(C)** now causes the poppet assembly to move downward opening seat area **(E)** allowing air to flow to meet the downstream demand. The flow of downstream air is metered by the amount of opening **(E)**.

Should downstream pressure exceed the desired regulated pressure, the excess pressure will cause the diaphragm **(D)** to move upward against control spring **(C)**, open vent hole **(F)**, and vent the excess pressure to atmosphere through the hole in the bonnet **(H)**. (This occurs in the relieving type regulator only.)

Technical Information

CAUTION:

REGULATOR PRESSURE ADJUSTMENT –

The working range of knob adjustment is designed to permit outlet pressures within their full range. Pressure adjustment beyond this range is also possible because the knob is not a limiting device. This is a common characteristic of most industrial regulators, and limiting devices may be obtained only by special design.

For best performance, regulated pressure should always be set by increasing the pressure up to the desired setting.

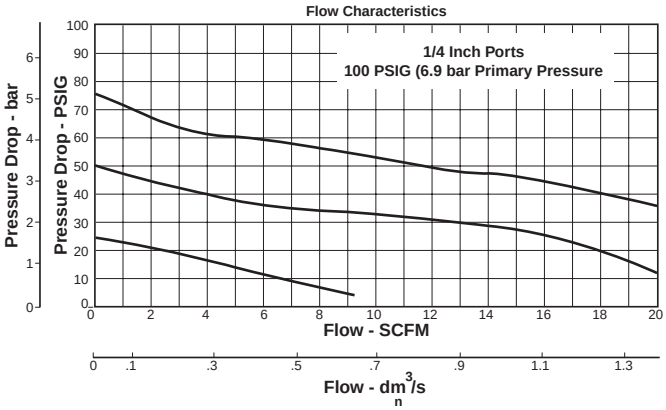

PR354, PR364 Regulator Kits & Accessories

R354 Bonnet Kit CKR354YSS

PR364 Bonnet Kit (Knob Included) CKR364YSS

Gauge (Stainless) –
160 PSIG (0 to 1100 kPa), 1-1/2" Face K4515N14160SS

Panel Mount Bracket (Stainless) 161X57-SS

Panel Mount Nut –
Stainless R05X51-SS
Plastic R05X51-P

Pipe Nipple –
1/4" 316 Stainless Steel 616Y28-SS

Service Kit –
Relieving RKR364YSS
Non-Relieving RKR364KYSS

Springs –
0-25 PSIG Range SPR-375-2-SS
0-60 PSIG Range SPR-376-1-SS
0-125 PSIG Range SPR-377-1-SS

Specifications

Gauge Port ..... 1/4 Inch

Operation ..... Fluorocarbon Diaphragm

Port Threads ..... 1/4 Inch

Pressure & Temperature Ratings –
PR354 ..... 300 PSIG Max (20.7 bar)
0°F to 180°F (-18°C to 82°C)
PR364 ..... 300 PSIG Max (20.7 bar)
0°F to 150°F (-18°C to 66°C)

Note: Air must be dry enough to avoid ice formation at temperatures below 32°F (0°C)

Weight ..... 0.5 lb. (0.23 kg)

Materials of Construction

Adjustment Mechanism / Springs ..... 316 Stainless Steel

Adjusting Knob (PR354) ..... 316 Stainless Steel

Adjusting Knob (PR364) ..... Polypropylene

Body ..... 316 Stainless Steel

Bonnet (PR354) ..... 316 Stainless Steel

Bonnet (PR364) ..... Acetal

Bottom Plug ..... 316 Stainless Steel

Poppet ..... 316 Stainless Steel

Seals ..... Fluorocarbon

Parker Hannifin Corporation
Pneumatic Division
Richland, Michigan
www.parker.com/pneumatics

PR10, PR11 Regulator – Standard

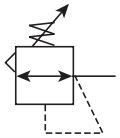

Features

- Stainless steel construction handles most corrosive environments.
- Large diaphragm to valve area ratio for precise regulation and high flow capacity.
- Meets NACE specifications MR-01-75/ISO 15156.
- Low temperature version available.
- High Flow: 1/2" – 80 SCFM§

PR11

PR10

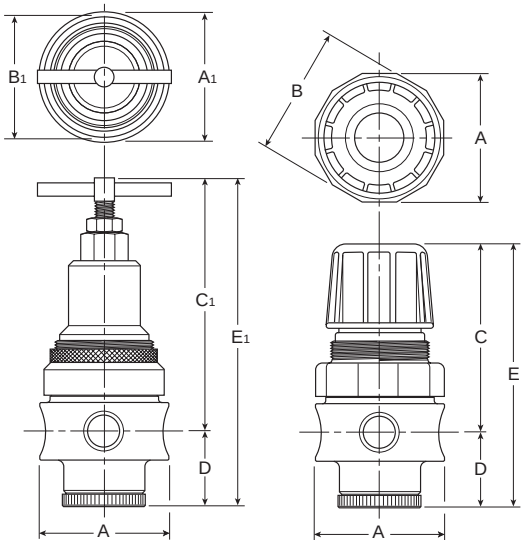

PR11 PR10

Series	Adjustment Type	Port Size	NPT	BSPP
PR10	Knob	1/2"	**PR10-04CSS**	PR10G04CSS
PR11	T-Handle	1/2"	**PR11-04CSS**	PR11G04CSS

Standard part numbers shown bold. For other models refer to ordering information below.

§ SCFM = Standard cubic feet per minute at 100 PSIG inlet, 75 PSIG no flow secondary setting and 15 PSIG pressure drop.

⚠ WARNING

Product rupture can cause serious injury.
Do not connect regulator to bottled gas.
Do not exceed maximum primary pressure rating.

PR10, PR11 Regulator Dimensions		
A 2.36 (60)	**A_1** 3.36 (85)	**B** 2.35 (60)
B_1 2.25 (57)	**C** 3.59 (91)	**C_1** 4.70 (119)
D 1.38 (35)	**E** 4.97 (126)	**E_1** 6.13 (156)

inches (mm)
NOTE: 1.75 Dia. (44mm) hole required for panel mounting.

Ordering Information

PR10	-	04	C		SS

Series
- **PR10 Standard Knob**
- **PR11 Stainless Steel Tee Handle**

Port Type
- **- NPT**
- G BSPP

Port Size
- **04 1/2 Inch**

Pressure Range
- B 0-60 PSIG (0-4.1 bar)
- **C 0-125 PSIG (0-8.5 bar)**
- D 0-250 PSIG (0-17 bar)

Options
- **Blank Relieving**
- K Non-Relieving
- L Low Temp.
- P Panel Mount Nut

Material
- **SS Stainless Steel**

BOLD ITEMS ARE MOST POPULAR.

Parker Hannifin Corporation
Pneumatic Division
Richland, Michigan
www.parker.com/pneumatics

Operation

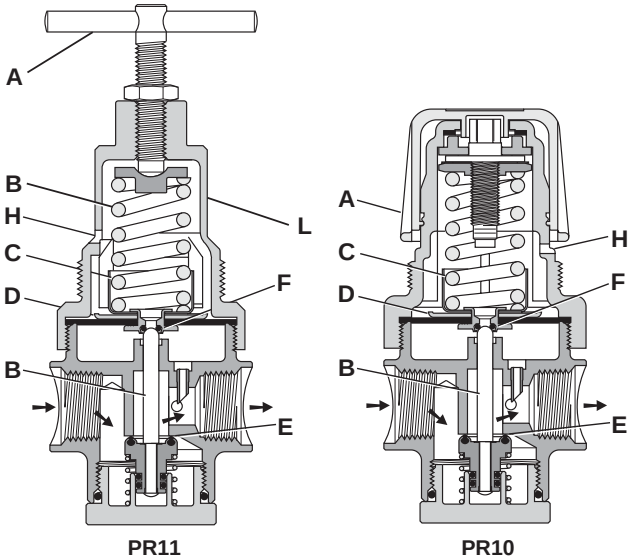

With the adjusting knob / T-Handle **(A)** turned fully counter-clockwise (no spring load), and pressure supplied to the regulator inlet port, the valve poppet assembly **(B)** is closed. Turning the adjusting knob clockwise applies a load to control spring **(C)**. This load causes the diaphragm **(D)** and the valve poppet assembly **(B)** to move downward allowing flow across the seat area **(E)** created between the poppet assembly and the seat. Pressure in the downstream line is sensed below the diaphragm **(D)** and offsets the load of spring **(C)**. As downstream pressure rises, poppet assembly **(B)** and diaphragm **(D)** move upward until the area **(E)** is closed and the load of the spring **(C)** and pressure under diaphragm **(D)** are in balance. A reduced outlet pressure has now been obtained, depending on spring load. Creating a demand downstream, such as opening a valve, results in a reduced pressure under the diaphragm **(D)**. The load of control spring **(C)** now causes the poppet assembly to move downward opening seat area **(E)** allowing air to flow to meet the downstream demand. The flow of downstream air is metered by the amount of opening **(E)**.

Should downstream pressure exceed the desired regulated pressure, the excess pressure will cause the diaphragm **(D)** to move upward against control spring **(C)**, open vent hole **(F)**, and vent the excess pressure to atmosphere through the hole in the bonnet **(H)**. (This occurs in the relieving type regulator only.)

Technical Information

CAUTION:

REGULATOR PRESSURE ADJUSTMENT –
The working range of knob adjustment is designed to permit outlet pressures within their full range. Pressure adjustment beyond this range is also possible because the knob is not a limiting device. This is a common characteristic of most industrial regulators, and limiting devices may be obtained only by special design.

For best performance, regulated pressure should always be set by increasing the pressure up to the desired setting.

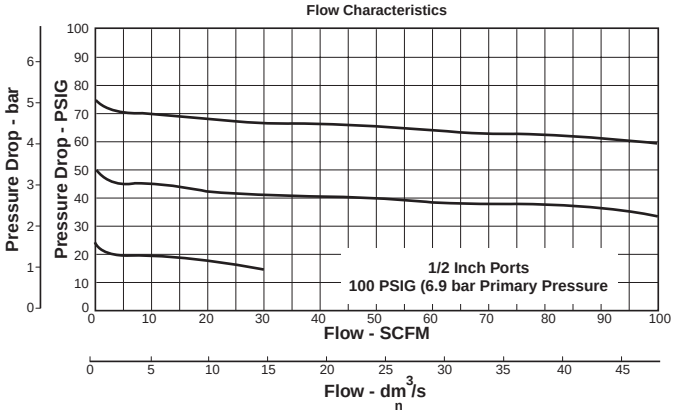

PR10, PR11 Regulator Kits & Accessories

PR10 Bonnet Kit (Knob Included) CKR10YSS
PR11 Bonnet Kit CKR11YSS
Gauge (Stainless) –
160 PSIG (0 to 1100 kPa), 2" Face K4520N14160SS
Panel Mount Bracket (Stainless) R10Y57-SS
Panel Mount Nut –
Stainless R10X51-SS
Plastic R10X51-P
Pipe Nipple –
1/2" 316 Stainless Steel 616A28-SS
Service Kit –
Relieving RKR10YSS
Non-Relieving RKR10KYSS
Springs –
0-60 PSIG Range SPR-388-1-SS
0-125 PSIG Range SPR-389-1-SS
0-250 PSIG Range SPR-390-1-SS

Specifications

Gauge Port ..... 1/4 Inch
Operation ..... Fluorocarbon Diaphragm
Port Threads ..... 1/2 Inch

Pressure & Temperature Ratings –
PR10 ..... 300 PSIG Max (20.7 bar)
0°F to 150°F (-18°C to 66°C)
PR11 ..... 300 PSIG Max (20.7 bar)
0°F to 180°F (-18°C to 82°C)
Option "L" Minimum Operating Temperature† ..... -40° C/F

Note: Air must be dry enough to avoid ice formation at temperatures below 32°F (0°C)

Weight ..... 1.79 lb. (0.81 kg)

Materials of Construction

Adjustment Mechanism / Springs ..... 316 Stainless Steel
Body ..... 316 Stainless Steel
Bonnet / Tee Handle (PR11) ..... 316 Stainless Steel
Bonnet / Knob (PR10) ..... Acetal
Bottom Plug ..... 316 Stainless Steel
Poppet ..... 316 Stainless Steel
Seals ..... Fluorocarbon

† **Note:** "Low Temperature" option is intended for applications where the ambient temperature may be down to -40° C/F. Air supply must be free of moisture to prevent ice formation and malfunction of units. These units contain EPDM seals. Make sure any oils in the airstream are compatible.

Parker Hannifin Corporation
Pneumatic Division
Richland, Michigan
www.parker.com/pneumatics

PB548, PB558 Filter / Regulator – Miniature

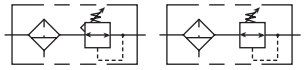

Features

- Stainless steel construction handles most corrosive environments.
- Large diaphragm to valve area ratio for precise regulation and high flow capacity.
- 1/8" female threaded drain.
- Meets NACE specifications MR-01-75/ISO 15156.
- High Flow: 1/4" – 12 SCFM§

PB548 PB558

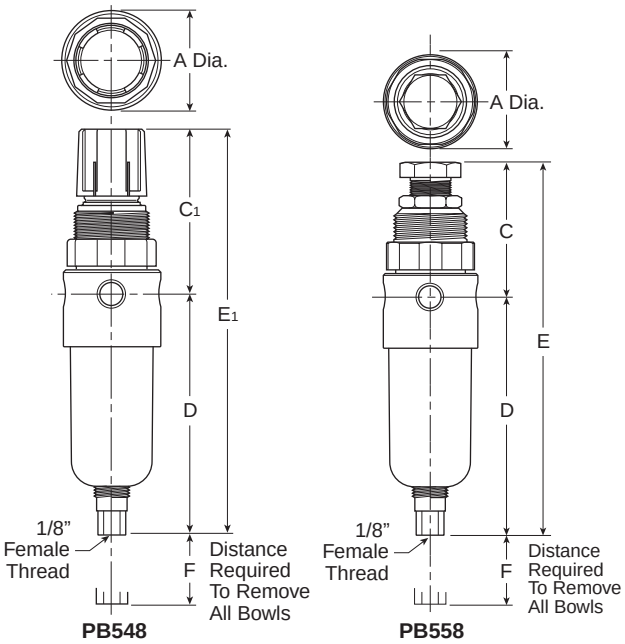

Series	Adjustment Type	Port Size	NPT	BSPP
PB548	Knob	1/4"	**PB548-02DHCSS**	PB548G02DHCSS
PB558	All Metal	1/4"	**PB558-02DHCSS**	PB558G02DHCSS

Standard part numbers shown bold. For other models refer to ordering information below.

§ SCFM = Standard cubic feet per minute at 100 PSIG inlet, 75 PSIG no flow secondary setting and 15 PSIG pressure drop.

⚠ WARNING

Product rupture can cause serious injury.
Do not connect regulator to bottled gas.
Do not exceed maximum primary pressure rating.

PB548, PB558 Filter / Regulator Dimensions		
A 1.56 (40)	**C** 2.17 (55)	**C_1** 2.63 (67)
D 3.63 (92)	**E** 5.80 (147)	**E_1** 6.26 (159)
F 1.58 (40)		

inches (mm)
NOTE: 1.25 Dia. (32mm) hole required for panel mounting.

Ordering Information

PB548	-	02	D	H	C		SS

Series
- **PB548 Standard Knob**
- **PB558 Stainless Steel**

Port Type
- **- NPT**
- G BSPP

Port Size
- **02 1/4 Inch**

Bowl
- **D Metal Bowl without Sight Gauge**

Element
- **H 20 Micron**
- G 5 Micron

Reduced Pressure Range
- A 0-25 PSIG (0-1.7 bar)
- B 0-60 PSIG (0-4.1 bar)
- **C 0-125 PSIG (0-8.5 bar)**

Options
- **Blank Relieving**
- K Non-Relieving
- R Automatic Pulse Drain
- P Panel Mount Nut

Material
- **SS Stainless Steel**

BOLD ITEMS ARE MOST POPULAR.

Parker Hannifin Corporation
Pneumatic Division
Richland, Michigan
www.parker.com/pneumatics

Operation

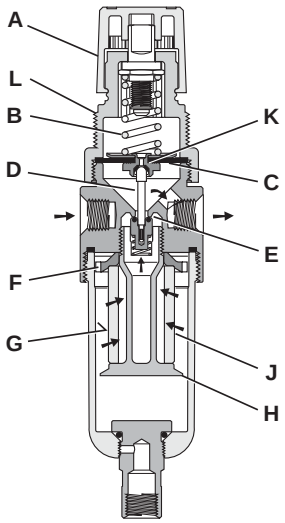

PB548

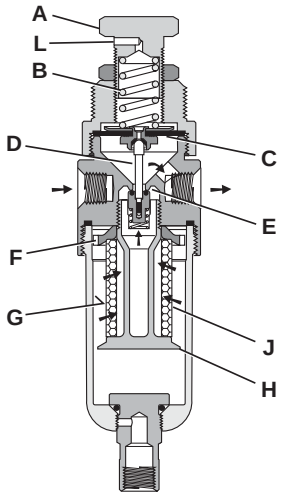

PB558

Turning the adjusting knob **(A)** clockwise applies a load to control spring **(B)** which forces diaphragm **(C)** and valve poppet assembly **(D)** to move downward allowing filtered air to flow through the seat area **(E)** created between the poppet assembly and the seat. **"First stage filtration".** Air pressure supplied to the inlet port is directed through deflector plate **(F)** causing a swirling centrifugal action forcing liquids and coarse particles to the inner bowl wall **(G)** and down below the lower baffle **(H)** to the quiet zone. After liquids and large particles are removed in the first stage of filtration **"second stage filtration"** occurs as air flows through element **(J)** where smaller particles are filtered out and retained. The air flow now passes through seat area **(E)** to the outlet port of the unit. Pressure in the downstream line is sensed below the diaphragm **(C)** and offsets the load of spring **(B)**. When downstream pressure reaches the set-point, poppet valve assembly **(D)** and diaphragm **(C)** move upward closing seat area **(E)**. Should downstream pressure exceed the desired regulated pressure, the excess pressure will cause the diaphragm **(C)** to move upward opening vent hole **(K)** venting the excess pressure to atmosphere through the hole in the bonnet **(L)**. (This occurs in the standard relieving type filter/regulators only.)

Technical Information

CAUTION:

REGULATOR PRESSURE ADJUSTMENT – The working range of knob adjustment is designed to permit outlet pressures within their full range. Pressure adjustment beyond this range is also possible because the knob is not a limiting device. This is a common characteristic of most industrial regulators, and limiting devices may be obtained only by special design.

For best performance, regulated pressure should always be set by increasing the pressure up to the desired setting.

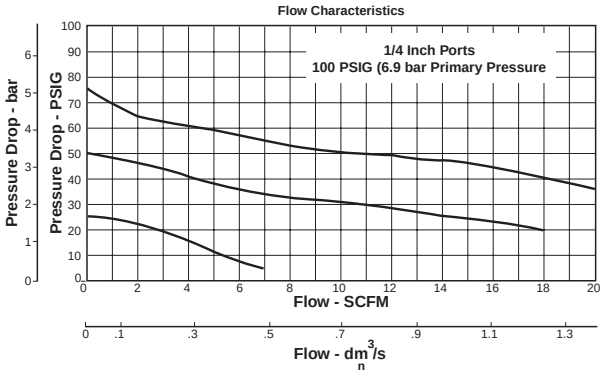

PB548, PB558 Regulator Kits & Accessories

PB558 Bonnet Kit (Knob Included) CKR354YSS
PB548 Bonnet Kit (Knob Included) CKR364YSS
Drain Kit –
Automatic Pulse Drain RK504SY-SS
Manual Twist Drain–
Small (Old) SA600Y7-1SS
Large (New) SAP05481
Filter Element Kits –
Particulate (5 Micron) EK504VY
Particulate (20 Micron) EK504Y
Gauge (Stainless) –
160 PSIG (0 to 1100 kPa), 1-1/2" Face K4515N14160SS
Panel Mount Bracket (Stainless)..... 161X57-SS
Panel Mount Nut –
Stainless R05X51-SS
Plastic.....R05X51-P
Pipe Nipple –
1/4" 316 Stainless Steel 616Y28-SS
Service Kit –
Relieving RK549YSS
Non-Relieving..... RK548YSS
Springs –
0-25 PSIG Range SPR-375-2-SS
0-60 PSIG Range SPR-376-1-SS
0-125 PSIG Range SPR-377-1-SS

Specifications

Bowl Capacity..... 1.0 Ounces
Filter Rating .....20 Micron
Gauge Port.....1/4 Inch
Operation .....Fluorocarbon Diaphragm
Port Threads .....1/4 Inch
Pressure & Temperature Ratings –
PB548.....300 PSIG Max. (20.7 bar)
0°F to 150°F (-18°C to 66°C)
PB558.....300 PSIG Max. (20.7 bar)
0°F to 180°F (-18°C to 82°C)
Auto Pulse Drain..... 10 to 175 PSIG (0 to 12 bar)
32°F to 150°F (0°C to 66°C)
Note: Air must be dry enough to avoid ice formation at temperatures below 32°F (2°C)
Sump Capacity .....0.4 Ounce
Weight .....0.6 lb. (0.27 kg)

Materials of Construction

Adjustment Mechanism / Springs .....316 Stainless Steel
Body .....316 Stainless Steel
Bonnet (PB548) ..... Acetal
Bonnet (PB558) .....316 Stainless Steel
Bottom Plug .....316 Stainless Steel
Knob (PB548) .....Polypropylene
Knob (PB558) .....316 Stainless Steel
Poppet .....316 Stainless Steel
Seals ..... Fluorocarbon

Parker Hannifin Corporation
Pneumatic Division
Richland, Michigan
www.parker.com/pneumatics

PB11, PB12 Filter / Regulator – Standard

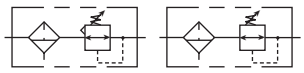

PB11 PB12

Features

- Stainless steel construction handles most corrosive environments.
- Large diaphragm to valve area ratio for precise regulation and high flow capacity.
- 1/8" female threaded drain.
- Meets NACE specifications MR-01-75/ISO-15156.
- Low temperature version available.
- High Flow: 1/2" – 72 SCFM§

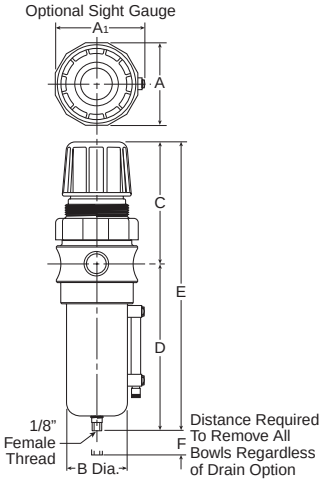

PB11

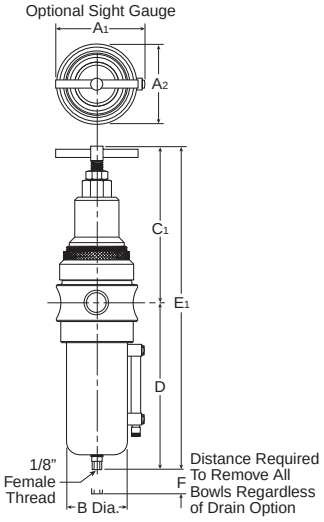

PB12

Series	Adjustment Type	Port Size	NPT		BSPP	
			Manual Twist Drain	Automatic Float Drain	Manual Twist Drain	Automatic Float Drain
			Metal Bowl with Sight Gauge			
PB11	Knob	1/2"	**PB11-04WJCSS**	**PB11-04WJCRSS**	PB11G04WJCSS	PB11G04WJCRSS
PB12	Tee-Handle	1/2"	**PB12-04WJCSS**	**PB12-04WJCRSS**	PB12G04WJCSS	PB12G04WJCRSS

Standard part numbers shown bold. For other models refer to ordering information below.

§ SCFM = Standard cubic feet per minute at 100 PSIG inlet, 90 PSIG no flow secondary setting and 15 PSIG pressure drop.

⚠ WARNING

Product rupture can cause serious injury.
Do not connect regulator to bottled gas.
Do not exceed maximum primary pressure rating.

PB11, PB12 Filter / Regulator Dimensions		
A 2.36 (60)	**A1** 2.50 (64)	**A2** 3.36 (85)
B 1.75 (44)	**C** 3.59 (91)	**C1** 4.70 (119)
D 5.00 (127)	**E** 8.59 (218)	**E1** 9.70 (246)
F 2.12 (54)		

inches (mm)
NOTE: 1.75 Dia. (44mm) hole required for panel mounting.

Ordering Information

PB11	-	04	W	J	C	—	SS

Series
- **PB11 Standard Knob**
- **PB12 Stainless Steel**

Port Type
- **- NPT**
- G BSPP

Port Size
- **04 1/2 Inch**

Bowl
- D Metal Bowl without Sight Gauge
- **W Metal Bowl with Sight Gauge**

Element
- **J 40 Micron**
- G 5 Micron

Reduced Pressure Range
- B 0-60 PSIG (0-4.1 bar)
- **C 0-125 PSIG (0-8.5 bar)**
- D 0-250 PSIG (0-17 bar)

Options
- **Blank Relieving**
- K Non-Relieving
- P Panel Mount Nut
- R Automatic Float Drain
- L* Low Temp.

* Manual Drain and Without Sight Gauge Only.

Material
- **SS Stainless Steel**

BOLD ITEMS ARE MOST POPULAR.

Parker Hannifin Corporation
Pneumatic Division
Richland, Michigan
www.parker.com/pneumatics

Operation

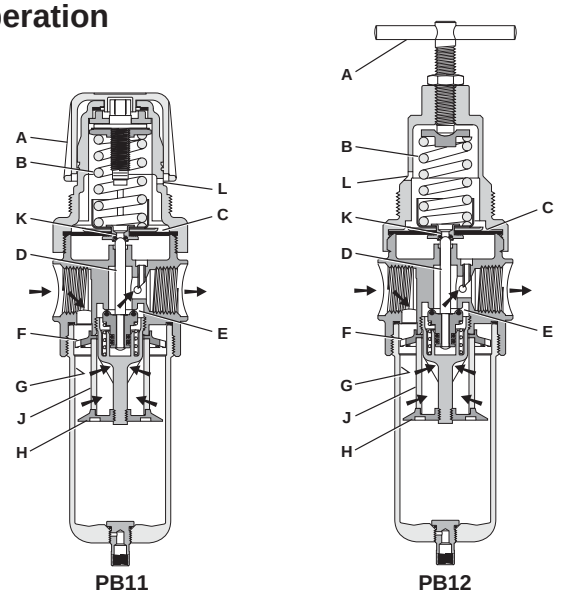

Turning the adjusting knob / T-Handle **(A)** clockwise applies a load to control spring **(B)** which forces diaphragm **(C)** and valve poppet assembly **(D)** to move downward allowing filtered air to flow through the seat area **(E)** created between the poppet assembly and the seat. **"First stage filtration".**
Air pressure supplied to the inlet port is directed through deflector plate **(F)** causing a swirling centrifugal action forcing liquids and coarse particles to the inner bowl wall **(G)** and down below the lower baffle **(H)** to the quiet zone. After liquids and large particles are removed in the first stage of filtration **"second stage filtration"** occurs as air flows through element **(J)** where smaller particles are filtered out and retained. The air flow now passes through seat area **(E)** to the outlet port of the unit. Pressure in the downstream line is sensed below the diaphragm **(C)** and offsets the load of spring **(B)**. When downstream pressure reaches the set-point, poppet valve assembly **(D)** and diaphragm **(C)** move upward closing seat area **(E)**. Should downstream pressure exceed the desired regulated pressure, the excess pressure will cause the diaphragm **(C)** to move upward opening vent hole **(K)** venting the excess pressure to atmosphere through the hole in the bonnet **(L)**. (This occurs in the standard relieving type filter/regulators only.)

Technical Information

CAUTION:

REGULATOR PRESSURE ADJUSTMENT – The working range of knob adjustment is designed to permit outlet pressures within their full range. Pressure adjustment beyond this range is also possible because the knob is not a limiting device. This is a common characteristic of most industrial regulators, and limiting devices may be obtained only by special design.

For best performance, regulated pressure should always be set by increasing the pressure up to the desired setting.

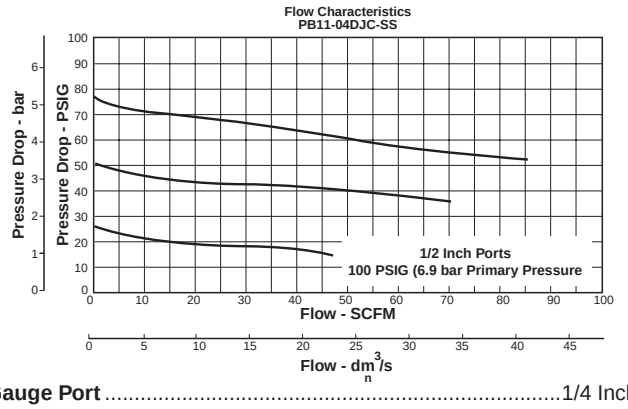

PB11, PB12 Regulator Kits & Accessories

PB11 Bonnet Kit (Knob Included) CKR10YSS
PB12 Bonnet Kit CKR11YSS
Drain Kit –
Automatic Float Drain SA10MDSS
Manual Twist Drain–
Small (Old) SA600Y7-1SS
Large (New) SAP05481
Filter Element Kits –
Particulate (40 Micron) EKF10Y
Particulate (5 Micron) EKF10VY
Gauge (Stainless) –
160 PSIG (0 to 1100 kPa), 2" Face K4520N14160SS
Panel Mount Bracket (Stainless) R10Y57-SS
Panel Mount Nut –
Stainless R10X51-SS
Plastic R10X51-P
Pipe Nipple –
1/2" 316 Stainless Steel 616A28-SS
Service Kit –
Relieving RKR10YSS
Non-Relieving RKR10KYSS
Springs –
0-60 PSIG Range SPR-388-1-SS
0-125 PSIG Range SPR-389-1-SS
0-250 PSIG Range SPR-390-1-SS

Specifications

Bowl Capacity ..... 4.0 Ounces
Filter Rating ..... 40 Micron
Gauge Port ..... 1/4 Inch
Operation ..... Fluorocarbon Diaphragm
Port Threads ..... 1/2 Inch
Pressure & Temperature Ratings –
PB11 (Metal Bowl D or W) ..... 300 PSIG Max (20.7 bar)
0°F to 150°F (-18°C to 66°C)
PB12 (Metal Bowl D) ..... 300 PSIG Max (20.7 bar)
0°F to 180°F (-18°C to 82°C)
PB12 (Metal Bowl W) ..... 300 PSIG Max (20.7 bar)
0°F to 150°F (-18°C to 66°C)
Automatic Float Drain ..... 15 to 175 PSIG (1 to 12 bar)
32°F to 150°F (0°C to 66°C)
Option "L" Minimum Operating Temperature† ..... -40° C/F

Note: Air must be dry enough to avoid ice formation at temperatures below 32°F (0°C).

Sump Capacity ..... 1.7 Ounce
Weight ..... 2.42 lb. (1.09 kg)

Materials of Construction

Adjustment Mechanism / Springs ..... 316 Stainless Steel
Body ..... 316 Stainless Steel
Bonnet / Knob (PB11) ..... Acetal
Bonnet / Tee Handle (PB12) ..... 316 Stainless Steel
Bottom Plug ..... 316 Stainless Steel
Poppet ..... 316 Stainless Steel
Seals ..... Fluorocarbon
Sight Gauge ..... Isoplast

Parker Hannifin Corporation
Pneumatic Division
Richland, Michigan
www.parker.com/pneumatics

PL10 Lubricator – Standard

Features

- Stainless Steel Construction Handles Most Corrosive Environments
- 1/8" Female Threaded Drain
- Fillable Under Pressure
- Meets NACE Specifications MR-01-75/ISO 15156
- High Flow: 1/2" - 100 SCFM§

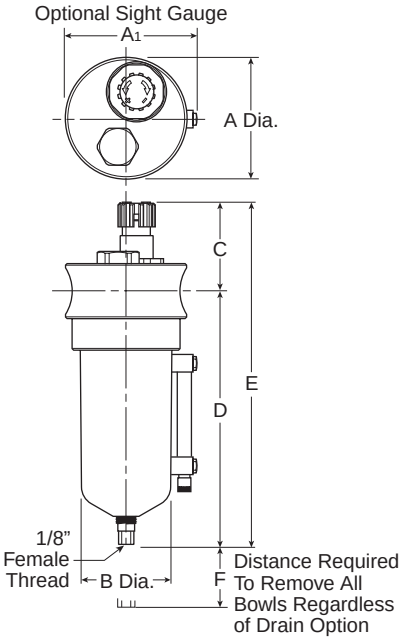

Port Size	NPT	BSPP
	Manual Twist Drain	**Manual Twist Drain**
1/2"	**Metal Bowl With Sight Gauge**	
	PL10-04WSS	PL10G04WSS

Standard part numbers shown bold. For other models refer to ordering information below.

§ SCFM = Standard cubic feet per minute at 90 PSIG inlet and 5 PSIG pressure drop.

PL10 Lubricator Dimensions		
A 2.36 (60)	**A1** 2.52 (64)	**B** 1.73 (44)
C 2.17 (55)	**D** 5.46 (139)	**E** 7.62 (194)
F 3.50 (89)		

inches (mm)

Ordering Information

PL10	-	04	W	SS

Port Type
- **- NPT**
- G BSPP

Port Size
- **04 1/2 Inch**

Bowl
- D Metal Bowl without Sight Gauge
- **W Metal Bowl with Sight Gauge**

Material
- **SS Stainless Steel**

BOLD ITEMS ARE MOST POPULAR.

Parker Hannifin Corporation
Pneumatic Division
Richland, Michigan
www.parker.com/pneumatics

Operation

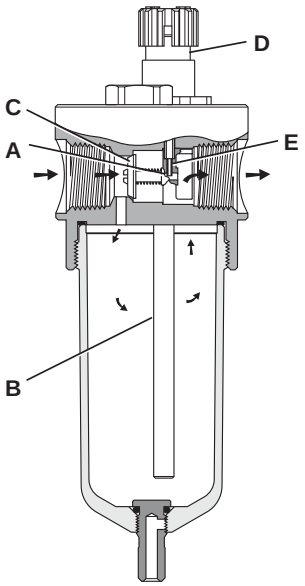

Air flowing through the unit goes through two paths. At low flow rates the majority of the air flows through the Venturi section **(A)**. The rest of the air opens the check valve **(C)**. The velocity of the air flowing through the Venturi section **(A)** creates a pressure drop. This lower pressure allows the oil to be forced from the reservoir through the pickup tube **(B)** and travels up to the metering screw **(D)**. The rate of oil delivery is then controlled by adjusting the metering screw **(D)**. Oil flows past the metering screw **(D)** and forms a drop in the nozzle tube **(E)**. As the oil drops through the dome **(F)** and back into the Venturi section **(A)**, it is broken up into fine particles. It is then mixed with the air flowing past the check valve **(C)** and is carried downstream. As the air flow increases the check valve **(C)** will open more fully. This additional flow will assure that the oil delivery rate will increase linearly with the increase of air flow.

Technical Information

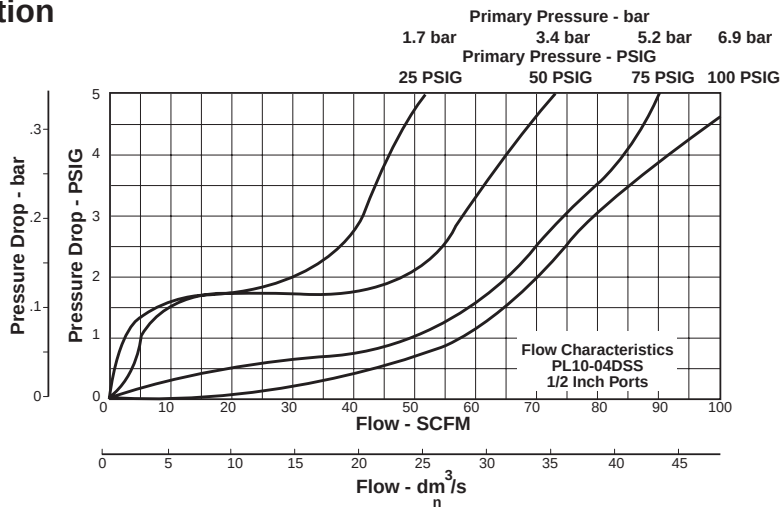

PL10 Filter Kits & Accessories

Drain Kit –
Manual Twist Drain –
Small (Old) SA600Y7-1SS
Large (New) SAP05481

Pipe Nipple –
1/2" 316 Stainless Steel 616A28-SS

Sight Dome Kit –
(Old).....RKL10SS
(New) PS740N

Specifications

Bowl Capacity ..... 4.0 Ounces
Port Threads .....1/2 Inch
Pressure & Temperature Ratings –
Metal Bowl (D)..... 0 to 300 PSIG (0 to 20.7 bar)
0°F to 150°F (-18°C to 66°C)
Metal Bowl (W) ..... 0 to 250 PSIG (0 to 17.2 bar)
0°F to 150°F (-18°C to 66°C)

Note: Air must be dry enough to avoid ice formation at temperatures below 32°F (0°C).

Weight .....1.9 lb. (0.85 kg)

Materials of Construction

Body .....316 Stainless Steel
Bowl .....316 Stainless Steel
Dip Tube .....316 Stainless Steel
Drain .....316 Stainless Steel
Fill Plug .....316 Stainless Steel
Seals ..... Fluorocarbon
Sight Dome ..... Nylon
Sight Gauge ..... Isoplast

Parker Hannifin Corporation
Pneumatic Division
Richland, Michigan
www.parker.com/pneumatics

Notes

Parker Hannifin Corporation
Pneumatic Division
Richland, Michigan
www.parker.com/pneumatics

Precision Regulators

Air Preparation Units

Section E

www.parker.com/pneu/precreg

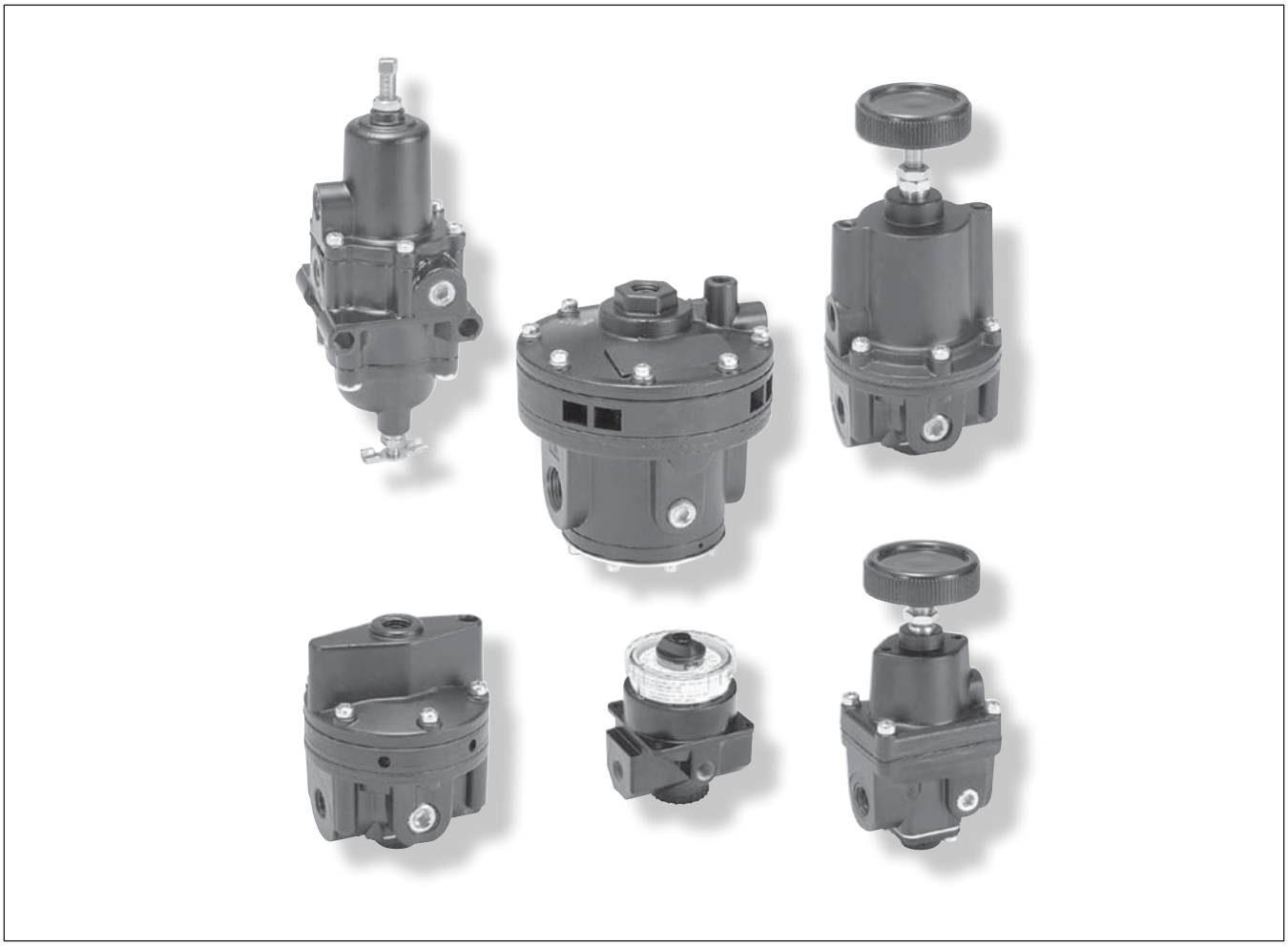

Product Selection E2-E3
Application Guide E4-E5
27R Precision Regulator E6-E7
27E Precision Filter / Regulator E8-E9
51R Dial Regulator.....E10-E11
52R Dial Regulator.....E12-E13
53R Dial Regulator.....E14-E15
54R Dial Regulator.....E16-E17
P3RA302 Compact High Precision Regulator....E18-E19
P3RA102 Standard High Precision Regulator ...E20-E21
P3RA102BP High Precision Relief Valve E22-E23
P3RA171 High Precision Vacuum Regulator E24-E25
P3EA632 Precision Filter / Regulator.....E26-E27
P3BA208 Precision Pneumatic Input Signal Amplifier.....E28-E29
P3BA45 Precision Pneumatic Input Signal Amplifier.....E30-E31

BOLD ITEMS ARE MOST POPULAR.

Parker Hannifin Corporation
Pneumatic Division
Richland, Michigan
www.parker.com/pneumatics

Precision Regulators

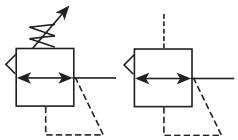

- Pipe Sizes 1/4 thru 2 Inch
- Flows to 150 SCFM
- Pressures to 500 PSIG

Air regulators are designed to provide quick response and accurate pressure regulation for the most demanding industrial applications.

- Precision 27R Series, 1/4 Inch
- Precision 27E Series, 1/4 Inch
- Dial Regulator 51R Series , 1/4 Inch
- Dial Regulator 52R Series, 1/4 thru 3/4 Inch
- Dial Regulator 53R Series, 3/4, 1 and 1-1/4 Inch
- Dial Regulator 54R Series, 1-1/2 and 2 Inch
- Compact High Precision P3RA302 Series, 1/4 Inch
- Standard High Precision P3RA102 Series, 1/4 Inch
- High Precision Relief Valve P3RA102BP Series, 1/4 Inch
- High Precision Vacuum Regulator P3RA171 Series, 1/4 Inch
- Precision Filter / Regulator P3EA632 Series, 1/4 Inch
- Precision Pneumatic Input Signal Amplifier P3BA208 Series, 1/4 Inch
- Precision Pneumatic Input Signal Amplifier P3BA45 Series, 1/2 and 3/4 Inch

Regulator Selection

1. Determine maximum system flow requirements.
2. Determine maximum allowable pressure drop at rated flow in SCFM.
3. Refer to flow chart and select regulator by choosing the curve that offers minimum pressure drop at desired flow in SCFM.

Reading Flow Charts to Size Regulators

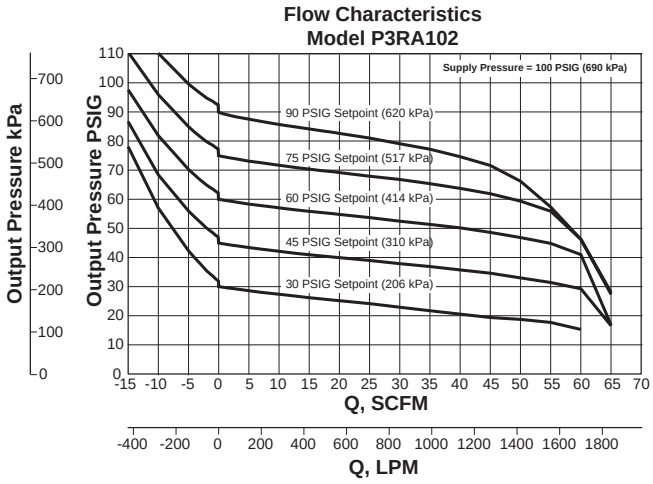

Once the required flow is determined for a pneumatic application the regulator or filter/regulator can be selected by using the flow chart. The chart serves two different purposes. To read the flow, use the right side of the chart. To read the relief characteristics use the left side of the chart. When reading the flow chart, first determine the secondary pressure that will be used. Find the appropriate pressure curve on the graph. Given an acceptable pressure drop for an application, follow the flow curve until it intersects the pressure drop point. This will give the flow at that particular pressure drop.

⚠ WARNING

Product rupture can cause serious injury.
Do not connect regulator to bottled gas.
Do not exceed maximum primary pressure rating.

CAUTION:

REGULATOR PRESSURE ADJUSTMENT – The working range of knob adjustment is designed to permit outlet pressures within their full range. Pressure adjustment beyond this range is also possible because the knob is not a limiting device. This is a common characteristic of most industrial regulators, and limiting devices may be obtained only by special design.
For best performance, regulated pressure should always be set by increasing the pressure up to the desired setting.

Parker Hannifin Corporation
Pneumatic Division
Richland, Michigan
www.parker.com/pneumatics

Dial Regulator

The Dial Regulator is a constant bleed, piston operated regulator. The pilot controlled pressure reducing valve provides exceptionally high air flow with steady pressure control and minimal secondary pressure drop. The non-rising adjustment knob provides quick selection of the desired secondary pressure in less than one full turn. The adjustment knob also can serve as the pressure indicator thereby eliminating the need for a pressure gauge.
This regulator is specifically designed for applications requiring more accurate air circuit control, high air flow capacity with flat performance curves and quick regulator adjustment. The regulator can be used as a conventional regulator for standard air circuits or as a pilot regulator to provide pressure to the control chamber of a pilot operated (slave) regulator.

Operation

To set the regulator, turn the large dial adjustment knob to the desired secondary set pressure. This opens the pilot valve seat allowing air flow into the control chamber which forces the lower piston downward against the relief seat and opens the main valve. At the same time, the air in the control chamber forces the upper piston upward against Belleville springs which closes the pilot valve seat when the set pressure is attained. Secondary pressure in the chamber is now balanced against the control pressure through the lower piston. If demand flow increases, the constant control pressure will force the lower piston and the main valve further downward, and allow more flow downstream. A higher than desired secondary pressure will force the lower piston upward, closing the main valve seat and opening the main relief valve seat thereby allowing air to relieve to the atmosphere. For best performance, regulated pressure should always be set by increasing the pressure up to the desired setting.

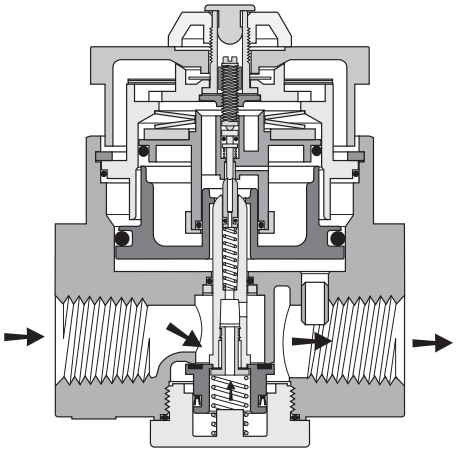

Precision Regulator

For use in applications that require reliable performance and accurate pressure control.This type of regulator is generally used for material handling systems, flow and temperature controllers, critical air control circuits, medical and scientific test equip-ment, and valve positioners.

Operation

Set the desired secondary pressure by turning the adjustment knob clockwise. This action increases the regulating spring force against the top of the diaphragm disc. When the spring force above exceeds the air pressure beneath the diaphragm, it is transmitted by the valve stem and opens the valve. Airflow through the regulator now occurs.
A precisely designed and positioned aspirator tube constantly transmits the secondary pressure to the under side of the diaphragm so that during flow conditions any pressure loss can be quickly compensated for. When flow is no longer required, the outlet pressure increases slightly, allowing the diaphragm to rise, the valve to close, and set pressure to be maintained.
On self-relieving models, if outlet pressure should increase above the set pressure, the diaphragm will rise therefore opening the relief seal between the diaphragm and the valve. The excess outlet pressure is then vented through the diaphragm orifice into the bonnet and subsequently to the atmosphere through an orifice in the bonnet. For best performance, regulated pressure should always be set by increasing the pressure to the desired setting.

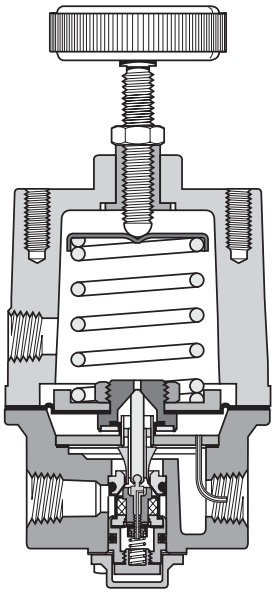

Parker Hannifin Corporation
Pneumatic Division
Richland, Michigan
www.parker.com/pneumatics

Precision Regulators Application Guide

Pneumatic pressure regulators are designed to provide a constant pressure output from a fluctuating supply pressure – much the way an electronic voltage regulator works. Pressure regulators provide varying degrees of accuracy with regard to their reduced pressure output. General Purpose pressure regulators work for most fluid power applications. However, for more pressure-critical applications precision regulators can provide the customer with the control they need.

A partial listing of things that can potentially cause regulator output pressure variation are:

- Temperature changes
- Inlet pressure changes
- Variations in flow
- Excess downstream pressure
- Cycling
- Time
- Leakage

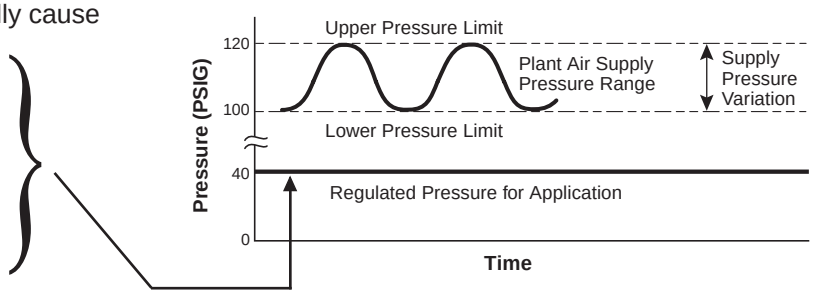

Who needs precision regulators?

Design level applications:
When designing a pneumatic system it is important to determine not only the air flow that the application will require but also the acceptable level of pressure variation. Some pneumatic applications cannot tolerate fluctuations in pressure. These applications can include static situations with only a steady pressure maintained, or dynamic flow situations involving any number of changing variables in play while trying to maintain a constant pressure.

Problem solving device for existing applications:
Sometimes an existing pneumatic application does not meet the customer's needs with regards to pressure control and/or stability. Any or all of the variables listed above can cause issues with pressure stability. As applications are expanded, added on to, or modified the pressure and flow requirements can change.

How do precision regulators differ from general purpose pneumatic regulators?

Examples-→	**High Precision Regulators** *P3RA302, P3RA102, P3RA102BP, P3RA171*	**Precision Regulators** *27R, Dial Regulators, R216*	**General Purpose Regulators** *05R, 06R, 07R, P3NR, R119*
Sensitivity: *Reduced pressure repeatability/variation under no-flow condition*	.005 to .010 PSIG (1/8" to 1/4" of water column)	.5 to 1 PSIG	2 to 4 PSIG
Regulator's ability to control back pressure accurately: **key for cylinder applications*	Begins to relieve at .005 to .010 PSIG overpressure	Begins to relieve at .5 to 2 PSIG overpressure	Begins to relieve at 5 to 10 PSIG overpressure
Regulator's ability to maintain set pressure under varying flow, input pressure, temperature conditions:	High	Medium	Standard
Constant Bleed - does the regulator constantly bleed a small volume of air to the atmosphere to maintain stability?	Yes	No	No

1" Water Column = .0360 PSI
1PSI = 27.7612 Inches Water Column

Parker Hannifin Corporation
Pneumatic Division
Richland, Michigan
www.parker.com/pneumatics

Application Chart

Original Equipment Manufacturers (OEMs)

Air Gauging	Manufacturers of Air Gauging Equipment.
Anesthesia Equipment	Manufacturers
Calibration Stands	Similar to Test Stands
Clamping Pressure Control	End Effect Grippers, Roll Loading
Control Panels	Manufacturers and Users
Coordinate Measuring Machines	Manufacturers use in Force Counterbalance Applications in Z-axis
Dispensing Equipment	Adhesive, Paint, or any other form of Liquid or Gas
Food Process Machinery	Manufacturers
Gas Analyzers	Used for Reference and Calibration Air Pressures
Ink or Paint Robotics Spraying Systems	Manufacturers use to Maintain an Even Pressure on System
Leak Testing Equipment	Manufacturers of Equipment that Detects Leaks (i.e., Plastic Bottles)
Medical Equipment	Manufacturers that Utilize for Blood Processing and Sampling as Examples
Oxygen Ventilators	Manufacturers
Pharmaceutical Process Machinery	Pill or Tablet Making Machines
Phone Cable Pressurization Systems	Manufacturers
Polishing Machinery	Used to Maintain Even Pressure on Polishing Head
Semi-conductor Manufacturing Machinery	Manufacturers
Smoke Stack Analyzers	Used for Reference and Calibration Air Pressures
Soil or Environmental Analysis Equipment	Used for Reference and Calibration Air Pressures
Tank Blanketing	Maintain Pressure on Top Level of a Tank or Storage Vessel
Test Equipment	Similar to Test Stands
Test Stands	Manufacturers of Test Stands, Laboratory Test Stands, Engineering Test Stands, Production Test Stands
Tool Balancers	Manufacturers of Tool Balancers, Manipulators, and Articulating Arms use High Relief Capacity Precision Regulators in a Force-balancing Application. Used as part of a Pneumatic Counter-balance System, the Regulator helps suspend the tool in the air and then makes it easy to move out of the way when not in use.
Web Tensioning	Machinery Builders for Printing Presses, Paper Converting, Packaging, Textiles, Plastics. Primarily Unwind Stands and Rewind Stands.

System Integrators

Automation Integrators	Anyone Involved in Designs or Projects that Automate Processes

Energy Controls Systems

HVAC	Anyone who would be involved in Designs that would include Damper and Louvre Control for HVAC Applications

End Users

Instrumentation Supervisors	
Instrumentation Technicians	
Project Engineers	
Store Room Supervisors	

MRO

Chemical	
Petrochemical	
Pulp & Paper	
Food & Drug	
Refineries	
Power	
Mining	
Oil & Gas	

Parker Hannifin Corporation
Pneumatic Division
Richland, Michigan
www.parker.com/pneumatics

27R Regulator – Precision

Features

- Fine adjustment sensitivity.
- Good repeatability and minimal pressure drop.
- High flow capacity.
- Two 1/4" gauge ports.
- Brass Poppet for long life.
- High Flow: 25 SCFM§
- Modular with 05 Series FRL.
- Non-rising, removable knob.
- Multiple porting options.

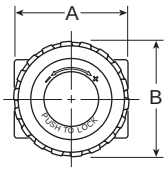

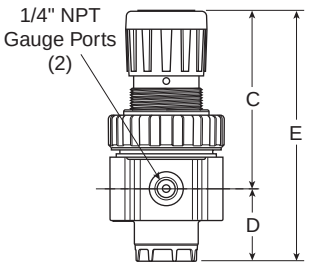

Port Size	Pressure	Part Number
1/4"	15 PSIG	**27R112A***
1/4"	30 PSIG	**27R110A***
1/4"	60 PSIG	**27R114A***
1/4"	125 PSIG	**27R113A***

Standard part numbers shown bold. For other models refer to ordering information below.

NOTE: 1.53 Dia. (39mm) hole required for panel mounting. Maximum panel thickness 1/4".

§ SCFM = Standard cubic feet per minute at 150 PSIG inlet, 90 PSIG no flow secondary setting and 5 PSIG pressure drop.

27R Regulator Dimensions		
A 2.00 (51)	**B** 2.06 (52)	**C** 3.16 (80)
D 1.28 (32)	**E** 4.44 (113)	

Inches (mm)

⚠ WARNING

Product rupture can cause serious injury.
Do not connect regulator to bottled gas.
Do not exceed maximum primary pressure rating.

Ordering Information

27R	1	10	A	*	—	—	---

Port Size
- **1 1/4 Inch**
- **2 3/8 Inch**

Pressure Range
- 10 30 PSIG
- 12 15 PSIG
- **13 125 PSIG**
- **14 60 PSIG**

Relief
- **A Relieving**

Engineering Level
- * Will be Entered at Factory

Port Typ

Blank	NPT
1	BSPP
2	BSPT

Options

Blank	No Options
L†	Preset Non-Adjustable
P†	Preset Adjustable
S†	Pressure Limiter Max. Adjustable
T†	Pressure Limiter Max. Non- Adjustable

† Inlet Pressure is 100 PSIG. For other pressures, contact factory.

Preset / Pressure Limited

Blank	None
XXX*	Preset Pressure
XXX*	Pressure Limited

* Available Preset / Pressure Limited Range, 10 to 90 PSIG in 5 PSIG increments. For higher pressures, contact factory. (Example: 065 = 65 PSIG)

BOLD ITEMS ARE MOST POPULAR.

Parker Hannifin Corporation
Pneumatic Division
Richland, Michigan
www.parker.com/pneumatics

Technical Information

Flow Characteristics
27R110A*
1/4 Inch Ports
100 PSIG (6.9 bar) Primary Pressure

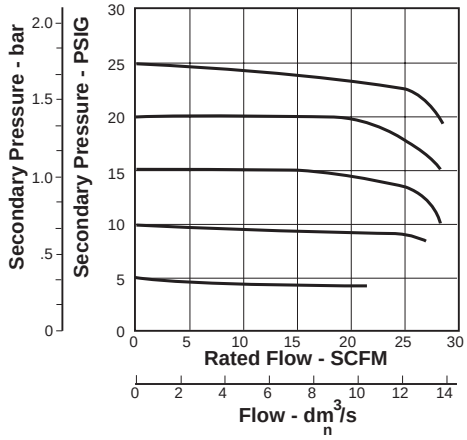

Flow Characteristics
27R113A*
1/4 Inch Ports
100 PSIG (6.9 bar) Primary Pressure

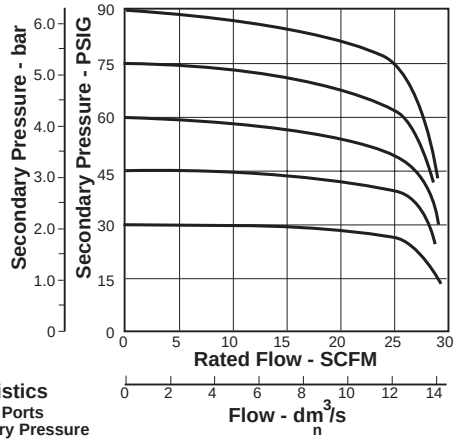

Flow Characteristics
27R114A*1/4 Inch Ports
100 PSIG (6.9 bar) Primary Pressure

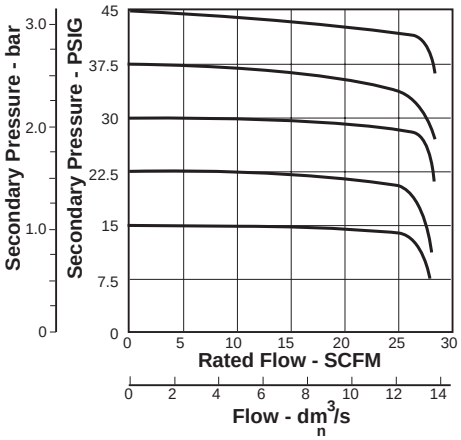

CAUTION:

REGULATOR PRESSURE ADJUSTMENT – The working range of knob adjustment is designed to permit outlet pressures within their full range. Pressure adjustment beyond this range is also possible because the knob is not a limiting device. This is a common characteristic of most industrial regulators, and limiting devices may be obtained only by special design.

For best performance, regulated pressure should always be set by increasing the pressure up to the desired setting.

27R Regulator Kits & Accessories

Bonnet Assembly Kit PS910P
Control Knob P0442001
Gauges – 1-1/2" Dial Face
30 PSIG (0 to 2.1 bar)..... K4515N14030
60 PSIG (0 to 4.1 bar)..... K4515N14060
160 PSIG (0 to 11.0 bar)..... K4515N14160
300 PSIG (0 to 20.0 bar)..... K4515N14300
2" Dial Face
60 PSIG (0 to 4.1 bar)..... K4520N14060
160 PSIG (0 to 11.0 bar)..... K4520N14160
300 PSIG (0 to 20.0 bar)..... K4520N14300
Mounting Bracket Kit PS963P
Panel Mount Nut – Metal PS964P
Service Kit PS907P
Springs – 1-30 PSIG Range..... P04427
1-15 PSIG Range..... P04428
0-60 PSIG Range..... P04426
2-125 PSIG Range..... P04425

Specifications

Bleed Rate ..... 2.0 SCFH
Gauge Ports (2) ..... 1/4 Inch
Effect of Supply Pressure Variation –
0.5 PSIG (0.04 bar) for 25 PSIG (1.7 bar) change in P^1
Relief Capacity –
0.5 SCFM (0.24 dm^2/s) @ 5 PSIG (0.4 bar) increase in P^2
Flow Capacity –
28 SCFM (13.2 dm^2/s) @ 100 PSIG (6.9 bar) P^1
and 20 PSIG (1.4 bar) P^2
Port Threads ..... 1/4, 3/8 Inch
Maximum Inlet Pressure ..... 250 PSIG (17.2 bar)
Relief Flow ..... 5.0 SCFM
Repeatability ..... ±.5 PSIG (±0.034 bar)
Response – ..... 510 ms
The valve will open to full flow and fill a volume of 100 in^3
Temperature Rating ..... 32°F to 175°F (0°C to 80°C)
Weight ..... 1.0 lb. (0.45 kg)

Materials of Construction

Poppet ..... Brass
Bonnet ..... Plastic
Body ..... Zinc
Collar, Knob ..... Plastic
Diaphragm ..... Nitrile
Bottom Cap ..... Plastic
Seals ..... Nitrile
Springs – Poppet & Control ..... Steel

Parker Hannifin Corporation
Pneumatic Division
Richland, Michigan
www.parker.com/pneumatics

27E Filter / Regulator – Precision

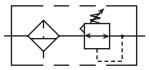

Features

- Excellent water removal efficiency.
- High flow.
- Fine adjustment sensitivity.
- Good repeatability and minimal pressure drop.
- Modular with 05 Series FRL
- Non-Rising removable adjustment knob.
- High Flow: 20 SCFM§

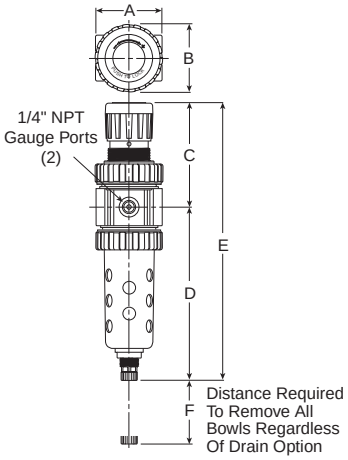

Port Size	NPT
	Twist Drain
Poly Bowl‡ / Sight Gauge	
1/4"	**27E12A13A***
3/8"	**27E22A13A***
Metal Bowl / Sight Gauge	
1/4"	**27E14A13A***
3/8"	**27E24A13A***

Standard part numbers shown bold. For other models refer to ordering information below.

‡ For Polycarbonate Bowl, see Caution on page A2.

§ SCFM = Standard cubic feet per minute at 150 PSIG inlet, 90 PSIG no flow secondary setting and 10 PSIG pressure drop.

27E Filter / Regulator Dimensions		
A	**B**	**C**
2.00 (51)	2.06 (52)	3.16 (80)
D†	**E†**	**F**
5.35 (136)	8.51 (216)	1.77 (45)

Inches (mm)
† With Twist Drain or Auto Pulse Drain

⚠ WARNING

Product rupture can cause serious injury.
Do not connect regulator to bottled gas.
Do not exceed maximum primary pressure rating.

Ordering Information

27E	1	2	A	13	A	*	—	—	---

Port Size
- **1 1/4 Inch**
- **2 3/8 Inch**

Elements
- **A 40 Micron**
- B 5 Micron
- Z Adsorber

Relief
- **A Relieving**

Port Type

Blank	**NPT**
1*	BSPP
2	BSPT

* 1/4 & 3/8 inch meet ISO 1179-1 Standard.

Preset / Pressure Limited

Blank	**None**
XXX*	Preset Pressure
XXX*	Pressure Limited

* Available Preset / Pressure Limited Range, 10 to 90 PSIG in 5 PSIG increments. For higher pressures, contact factory. (Example: 065 = 65 PSIG)

Bowl Options

Polycarbonate Bowl	Metal Bowl
1 Twist Drain	3 Twist Drain
2 Metal Bowl Guard / Twist Drain	**4 Sight Gauge / Twist Drain**
N Auto Float Drain	R Auto Float Drain
P Metal Bowl Guard / Auto Pulse Drain	**T Sight Gauge / Auto Pulse Drain**

Pressure Range

	Without Gauge
10	30 PSIG
11	**60 PSIG**
12	15 PSIG
13	**125 PSIG**
14§	200 PSIG

§ Requires Metal Bowl

Engineering Level
- * Will be Entered at Factory

Options

Blank	**No Options**
L†	Preset Non-Adjustable
P†	Preset Adjustable
S†	Pressure Limiter Max. Adjustable
T†	Pressure Limiter Max. Non-Adj.

† Inlet Pressure is 100 PSIG. For other pressures, contact factory.

Spring Type by Preset / Limited Pressure:
For Preset / Limited Pressure 10 to 25 use 30 PSI Spring
For Preset / Limited Pressure 26 to 50 use 60 PSI Spring
For Preset / Limited Pressure 51 to 90 use 125 PSI Spring

BOLD ITEMS ARE MOST POPULAR.

Parker Hannifin Corporation
Pneumatic Division
Richland, Michigan
www.parker.com/pneumatics

Technical Information

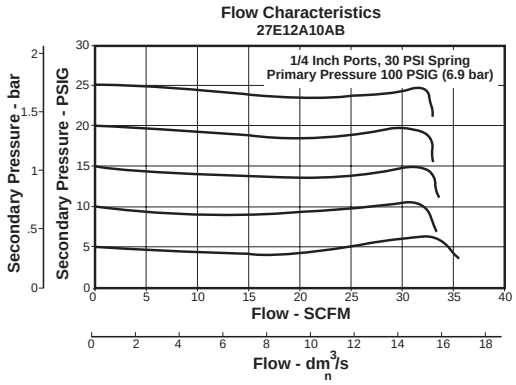

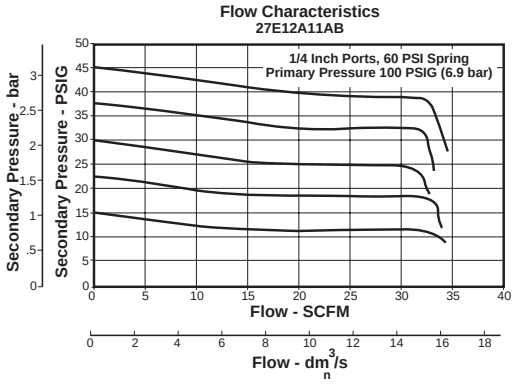

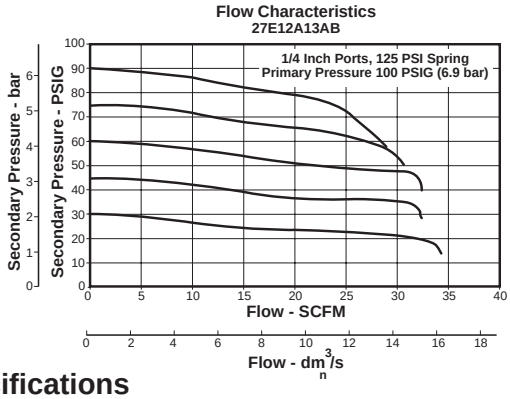

CAUTION:

REGULATOR PRESSURE ADJUSTMENT – The working range of knob adjustment is designed to permit outlet pressures within their full range. Pressure adjustment beyond this range is also possible because the knob is not a limiting device. This is a common characteristic of most industrial regulators, and limiting devices may be obtained only by special design.

For best performance, regulated pressure should always be set by increasing the pressure up to the desired setting.

27E Filter / Regulator Kits & Accessories

Bowl Guard Kit PS905P
Bowl Kits –
Poly Bowl – Automatic Pulse Drain PS995P
Twist Drain PS932P
Metal Bowl – Automatic Pulse Drain PS997P
Twist Drain PS934P
Sight Gauge / Automatic Pulse Drain PS996P
Sight Gauge / Twist Drain PS935P
Control Knob P0442001
Drain Kit – Automatic Pulse Drain PS998P
Semi-Auto Drain PS511P
Twist Drain PS512P
Push 'N' Drain PS513P
Filter Element Kits – 40 Micron PS901P
5 Micron PS902P
Adsorber PS931P
Sight Gauge Kit PS914P
Gauges – 1-1/2" Dial Face
30 PSIG (0 to 2.1 bar) K4515N14030
60 PSIG (0 to 4.1 bar) K4515N14060
160 PSIG (0 to 11.0 bar) K4515N14160
300 PSIG (0 to 20.0 bar) K4515N14300
2" Dial Face
60 PSIG (0 to 4.1 bar) K4520N14060
160 PSIG (0 to 11.0 bar) K4520N14160
300 PSIG (0 to 20.0 bar) K4520N14300
Mounting Bracket Kit (Includes Panel Mount Nut) PS963P
Panel Mount Nut – Metal PS964P
Springs – 1-15 PSIG Range P04428
1-30 PSIG Range P04427
1-60 PSIG Range P04426
2-125 PSIG Range P04425
2-200 PSIG P02934
Regulator Service Kit PS907P
Bonnet Assembly Kit PS910P

Specifications

Bowl Capacity ..... 2.0 Ounces
Bleed Rate ..... 2.0 SCFH
Gauge Ports (2) ..... 1/4 Inch
Effect of Supply Pressure Variation –
0.5 PSIG (0.04 bar) for 25 PSIG (1.7 bar) change in P^1
Flow Capacity –
33 SCFM (15.6 dm^2/s) @ 100 PSIG (6.9 bar) P^1
and 20 PSIG (1.4 bar) P^2
Sump Capacity ..... 0.9 Ounce
Port Threads ..... 1/4, 3/8 Inch
Pressure & Temperature Rating –
Polycarbonate Bowl – 0 to 150 PSIG (0 to 10.3 bar)
32°F to 125°F (0°C to 52°C)
Metal Bowl – 0 to 250 PSIG (0 to 17.2 bar)
32°F to 175°F (0°C to 80°C)
Automatic Pulse Drain – 10 to 150 PSIG (0.7 to 10.3 bar)
Relief Capacity –
0.5 SCFM (0.24 dm^2/s) @ 5 PSIG (0.4 bar) increase in P^2
Repeatability ..... ±.14 PSIG (±0.0097 bar)
Response – ..... 510 ms
The valve will open to full flow and fill a volume of 100 in^3
Weight ..... 1.35 lb. (0.6 kg)

Materials of Construction

Adjusting Stem ..... Steel
Body ..... Zinc
Bonnet, Internal Parts ..... Plastic
Bowl Guard ..... Steel
Collar ..... Plastic
Diaphragm ..... Nitrile
Drain ..... Plastic
Filter Elements – 40 Micron (Standard) ..... Plastic
5 Micron (Optional) ..... Plastic
Adsorber (Optional) ..... Activated Charcoal
Knob ..... Plastic
Poppet ..... Brass
Seals ..... Nitrile
Sight Gauge ..... Polyamide (Nylon)
Springs – Poppet & Control ..... Steel

Parker Hannifin Corporation
Pneumatic Division
Richland, Michigan
www.parker.com/pneumatics

51R Regulator – Relieving

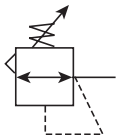

Features

- Pressure reference indicating dial face.
- Non-rising, pressure-adjustment dial.
- Self-relieving.
- Full pressure adjustment in less than one full turn.
- Recommended for pilot-air applications.
- Flow capacity: 1/4" – 0.7 SCFM§

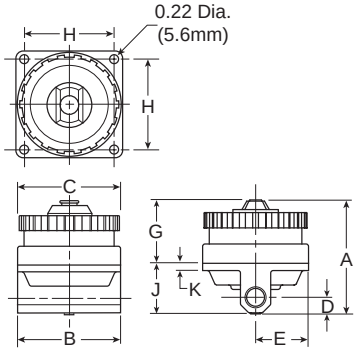

Port Size	Standard Pressure 5 to 160 PSIG (0.34 to 11 bar)	Low Pressure 2 to 40 PSIG (0.14 to 3 bar)
1/4"	**51R126R***	**51R125R***

Standard part numbers shown bold. For other models refer to ordering information below.

§ Inlet pressure 100 psig (6.9 bar). Secondary pressure 90 psig (6.2 bar).

51R Regulator Dimensions		
A 2.80 (71)	**B** 2.60 (66)	**C** 2.60 (66)
D 0.40 (10)	**E** 1.30 (33)	**G** 1.56 (39.6)
H 2.20 (56)	**J** 1.25 (31.8)	**K** .18 (4.6)

Inches (mm)

⚠ WARNING

Product rupture can cause serious injury.
Do not connect regulator to bottled gas.
Do not exceed maximum primary pressure rating.

Ordering Information

51R	1	26	R	*	—

Port Size
1 **1/4 Inch**

Springs
25 2 to 40 PSIG
26 5 to 160 PSIG

Relief
R Relieving

Engineering Level
* Will be Entered at Factory

Thread Type
Blank NPT
1 BSPP

BOLD ITEMS ARE MOST POPULAR.

Parker Hannifin Corporation
Pneumatic Division
Richland, Michigan
www.parker.com/pneumatics

Technical Information

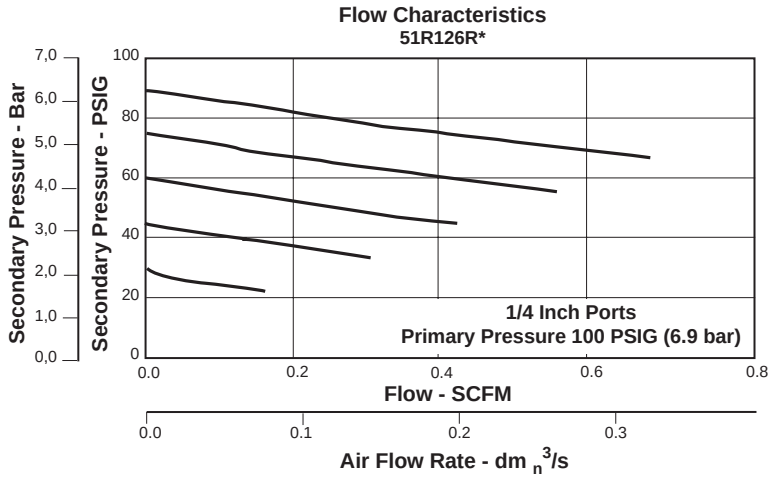

51R Regulator Kits & Accessories

Adjustment Dial Knob RRP-16-024-80
O-ring, Repair Kit GRP-95-260-80
Piston and Bonnet Repair Kit RRP-95-765-80
Spring, Regulation, Belleville Washer –
2 to 40 PSIG (2.8 bar) RRP-95-906-80
5 to 160 PSIG (11.0 bar) RRP-95-905-80
Tamper Resistant Kit RRP-95-585-80
Valve, Pilot with O-ring and Valve Spring RRP-96-934-80

Specifications

Adjusting Range Pressure ..... 2 to 40 PSIG (0 to 2.8 bar)
5 to 160 PSIG (0 to 11.0 bar)
Bleed Rate ..... 0.05 SCFM
Maximum Operating Temperature ..... 150°F (65.5°C)
Maximum Supply Pressure ..... 300 PSIG (20.7 bar)
Port Threads ..... 1/4"
Weight ..... 1.3 lb. (0.5 kg)

Materials of Construction

Body ..... Zinc
Bonnet ..... Zinc / Brass
Piston ..... Acetal
Seals ..... Nitrile
Springs ..... Steel
Valve Assembly ..... Brass / Nitrile / Acetal

Parker Hannifin Corporation
Pneumatic Division
Richland, Michigan
www.parker.com/pneumatics

52R Regulator – Relieving

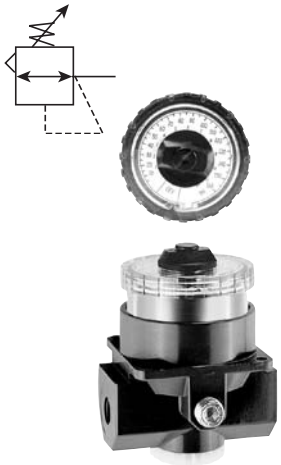

Features

- Balanced poppet design.
- Non-rising, pressure-adjusting dial.
- High-relief flow (3/16" relief orifice).
- Two 1/4" gauge ports.
- Piston operated.
- Flow capacity: 1/4" – 117 SCFM§
  3/8" – 180 SCFM§
  1/2" – 195 SCFM§
  3/4" – 220 SCFM§

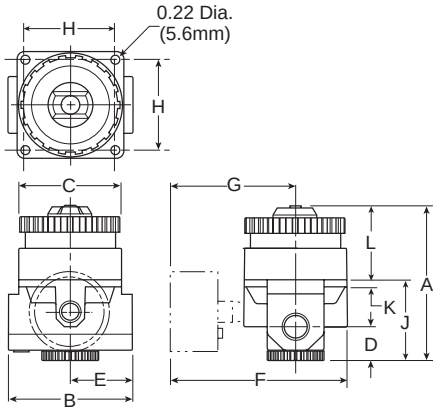

52R Regulator Dimensions		
A 4.10 (104)	**B** 3.20 (81)	**C** 2.60 (66)
D 0.95 (24)	**E** 1.60 (41)	**F** 4.30 (109)
G 2.70 (69)	**H** 2.20 (56)	**J** 2.08 (52.8)
K .18 (4.6)	**L** 2.07 (52.6)	

Inches (mm)

Port Size	Standard Pressure 5 to 160 PSIG (0.34 to 11 bar)	Low Pressure 2 to 40 PSIG (0.14 to 3 bar)
1/4"	**52R126R***	**52R125R***
3/8"	**52R226R***	**52R225R***
1/2"	**52R326R***	**52R325R***
3/4"	**52R426R***	**52R425R***

Standard part numbers shown bold. For other models refer to ordering information below.

§ Inlet pressure 100 PSIG (6.9 bar). Secondary pressure 90 PSIG (6.2 bar).

⚠ WARNING

Product rupture can cause serious injury.
Do not connect regulator to bottled gas.
Do not exceed maximum primary pressure rating.

Ordering Information

52R	1	26	R	*	—

Port Size
- 1 1/4 Inch
- 2 3/8 Inch
- 3 1/2 Inch
- 4 3/4 Inch

Springs
- 25 2 to 40 PSIG
- 26 5 to 160 PSIG

Relief
- R Relieving

Engineering Level
- * Will be Entered at Factory

Thread Type
- Blank NPT
- 1 BSPP

BOLD ITEMS ARE MOST POPULAR.

Parker Hannifin Corporation
Pneumatic Division
Richland, Michigan
www.parker.com/pneumatics

Technical Information

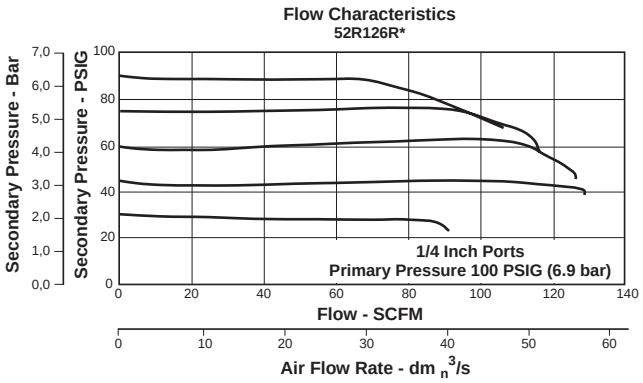

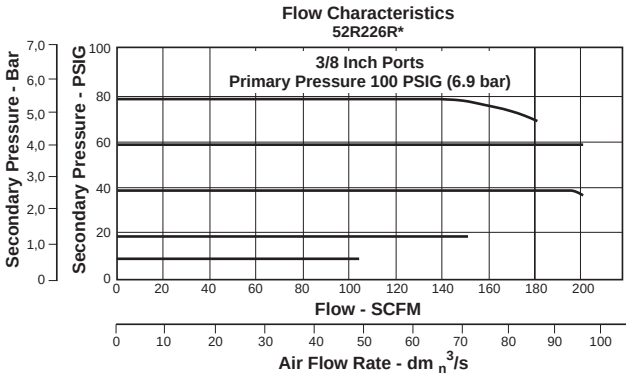

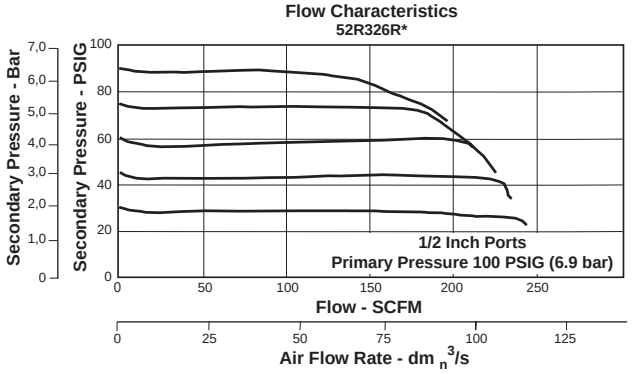

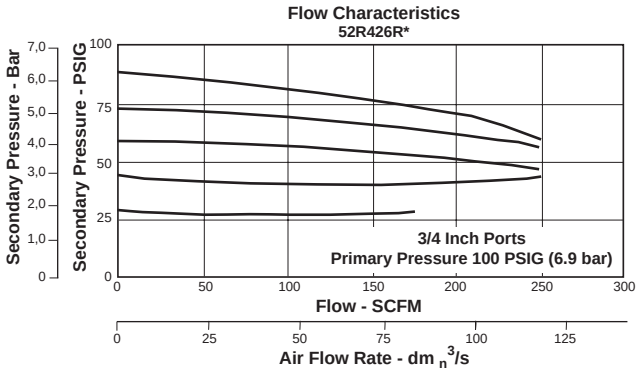

52R Regulator Kits & Accessories

Adjustment Dial Knob RRP-16-024-80
O-ring, Repair Kit GRP-95-260-80
Piston Bottom and O-ring Seal RRP-95-192-80
Pistons and Bonnet Repair Kit RRP-95-766-80
Spring, Regulation, Belleville Washer –
2 to 40 PSIG Range RRP-95-906-80
5 to 160 PSIG Range RRP-95-905-80
Tamper Resistant Kit RRP-95-585-80
Valve, Main with U-Cup Seal & Bottom Plug RRP-95-914-80
Valve, Main with U-Cup Seal RRP-95-151-80
Valve, Pilot with O-ring and Valve Spring RRP-96-934-80

Specifications

Adjusting Range Pressure ..... 2 to 40 PSIG (0 to 2.8 bar)
5 to 160 PSIG (0 to 11.0 bar)
Bleed Rate ..... 0.05 SCFM
Gauge Ports ..... Two Ports 1/4"
(Can be used as additional High Flow 1/4 Inch Outlet Ports)
Maximum Operating Temperature ..... 150°F (65.5°C)
Maximum Supply Pressure ..... 300 PSIG (20.7 bar)
Port Threads ..... 1/4", 3/8", 1/2", 3/4"
Weight ..... 2.3 lb. (1.04 kg)

Materials of Construction

Body ..... Zinc
Bonnet ..... Zinc / Brass
Piston ..... Acetal
Seals ..... Nitrile
Springs ..... Steel
Valve Assembly ..... Brass / Nitrile / Acetal

Parker Hannifin Corporation
Pneumatic Division
Richland, Michigan
www.parker.com/pneumatics

53R Regulator – Relieving

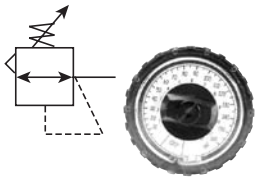

Features

- Balanced poppet design.
- N on-rising, pressure-adjusting dial.
- High-relief flow (3/16" relief orifice).
- Two 1/4" gauge ports.
- Piston operated.
- Flow capacity: 3/4" – 400 SCFM§
  1" – 650 SCFM§
  1-1/4" – 700 SCFM§

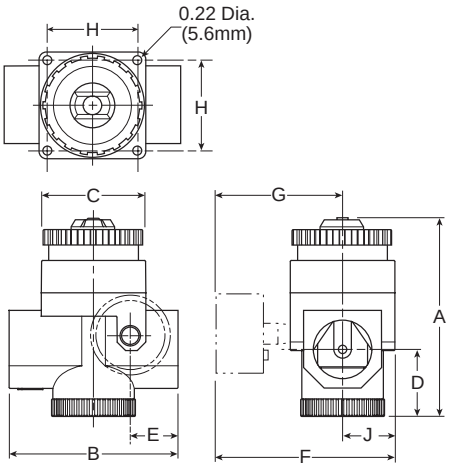

Port Size	Standard Pressure 5 to 160 PSIG (0.34 to 11 bar)	Low Pressure 2 to 40 PSIG (0.14 to 3 bar)
3/4"	**53R426R***	**53R425R***
1"	**53R526R***	**53R525R***
1-1/4"	**53R626R***	**53R625R***

Standard part numbers shown bold. For other models refer to ordering information below.

§ Inlet pressure 100 PSIG (6.9 bar). Secondary pressure 80 PSIG (5.5 bar).

53R Regulator Dimensions		
A 5.20 (132)	**B** 4.30 (109)	**C** 2.60 (66)
D 1.70 (43)	**E** 1.23 (31)	**F** 4.30 (109)
G 3.00 (76)	**H** 2.20 (56)	**J** 1.21 (33)

Inches (mm)

⚠ WARNING

Product rupture can cause serious injury.
Do not connect regulator to bottled gas.
Do not exceed maximum primary pressure rating.

Ordering Information

53R	4	26	R	*	—

Port Size
4 3/4 Inch
5 1 Inch
6 1-1/4 Inch

Springs	
25	**2 to 40 PSIG**
26	**5 to 160 PSIG**

Relief
R Relieving

Engineering Level
* Will be Entered at Factory

Thread Type	
Blank	**NPT**
1	BSPP

BOLD ITEMS ARE MOST POPULAR.

Parker Hannifin Corporation
Pneumatic Division
Richland, Michigan
www.parker.com/pneumatics

Technical Information

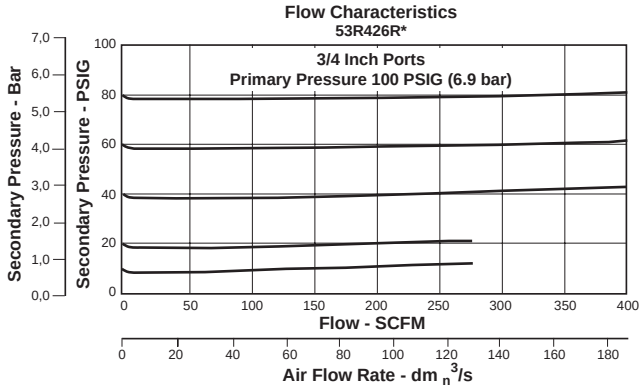

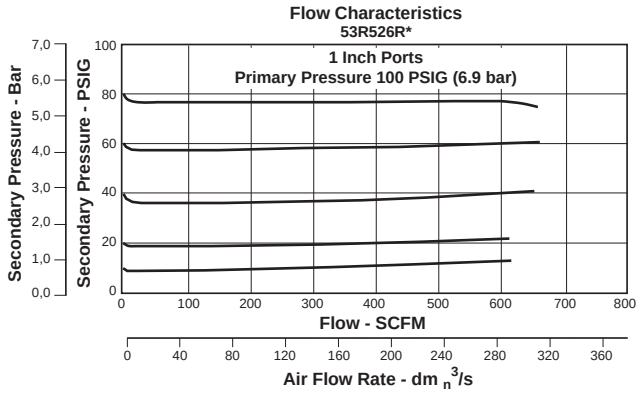

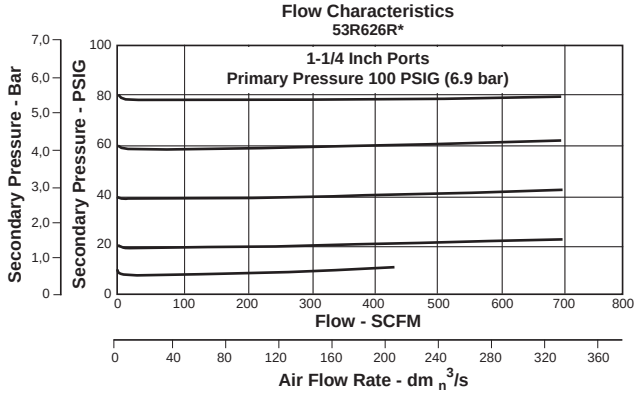

53R Regulator Kits & Accessories

Adjustment Dial Knob RRP-16-024-80
O-ring, Repair Kit GRP-95-261-80
Piston, Bottom and O-ring Seal RRP-95-192-80
Pistons and Bonnet Repair Kit RRP-95-766-80
Spring, Regulation, Belleville Washer –
2 to 40 PSIG Range RRP-95-906-80
5 to 160 PSIG Range RRP-95-905-80
Tamper Resistant Kit RRP-95-585-80
Valve, Main with O-ring Seal RRP-95-152-80
Valve, Pilot with O-ring and Valve Spring RRP-96-935-80

Specifications

Adjusting Range Pressure ..... 2 to 40 PSIG (0 to 2.8 bar)
5 to 160 PSIG (0 to 11.0 bar)
Bleed Rate ..... 0.05 SCFM
Gauge Ports ..... Two Ports 1/4"
(Can be used as additional High Flow 1/4 Inch Outlet Ports)
Maximum Operating Temperature ..... 150°F (65.5°C)
Maximum Supply Pressure ..... 300 PSIG (20.7 bar)
Port Threads ..... 3/4", 1", 1-1/4"
Weight ..... 4.0 lb. (1.8 kg)

Materials of Construction

Body ..... Zinc
Bonnet ..... Zinc / Brass
Piston ..... Acetal
Seals ..... Nitrile
Springs ..... Steel
Valve Assembly ..... Brass / Nitrile / Acetal

Parker Hannifin Corporation
Pneumatic Division
Richland, Michigan
www.parker.com/pneumatics

54R Regulator – Relieving

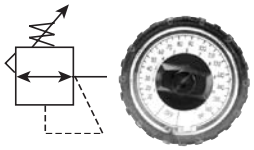

Features

- Balanced poppet design.
- Non-rising, pressure-adjusting dial.
- High-relief flow (3/16" relief orifice).
- Two 1/4" gauge ports.
- Piston operated.
- Flow capacity: 1-1/2" – 1,600 SCFM§
  2" – 1,600 SCFM§

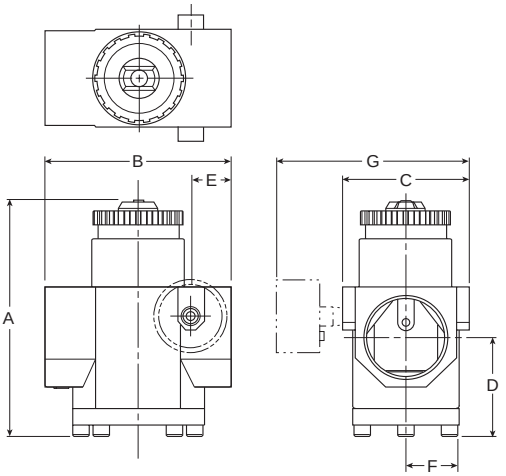

Port Size	Standard Pressure 5 to 160 PSIG (0.34 to 11 bar)	Low Pressure 2 to 40 PSIG (0.14 to 3 bar)
1-1/2"	**54R726R***	**54R725R***
2"	**54R826R***	**54R825R***

Standard part numbers shown bold. For other models refer to ordering information below.

§ Inlet pressure 100 PSIG (6.9 bar). Secondary pressure 80 PSIG (5.5 bar).

54R Regulator Dimensions		
A 6.80 (173)	**B** 5.30 (135)	**C** 3.60 (90)
D 2.80 (71)	**E** 1.15 (29)	**F** 1.80 (48)
G 5.30 (135)		

Inches (mm)

⚠ WARNING

Product rupture can cause serious injury.
Do not connect regulator to bottled gas.
Do not exceed maximum primary pressure rating.

Ordering Information

54R	7	26	R	*	—

Port Size
- **7 1-1/2 Inch**
- **8 2 Inch**

Springs
- **25 2 to 40 PSIG**
- **26 5 to 160 PSIG**

Relief
- **R Relieving**

Engineering Level
- * Will be Entered at Factory

Thread Type
- **Blank NPT**
- 1 BSPP

BOLD ITEMS ARE MOST POPULAR.

Parker Hannifin Corporation
Pneumatic Division
Richland, Michigan
www.parker.com/pneumatics

Technical Information

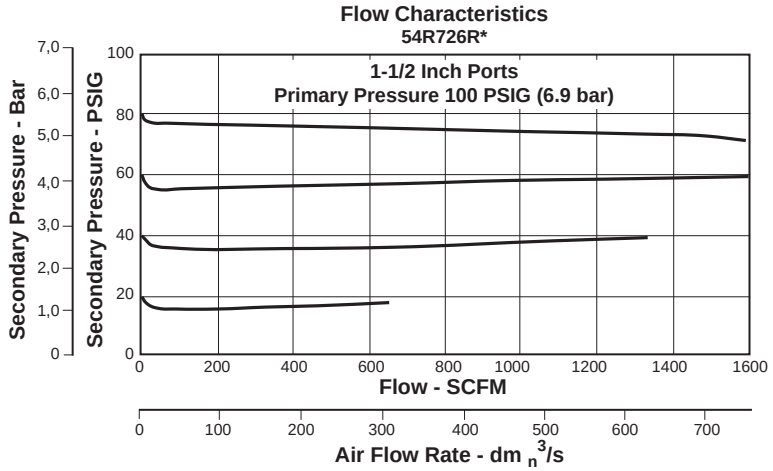

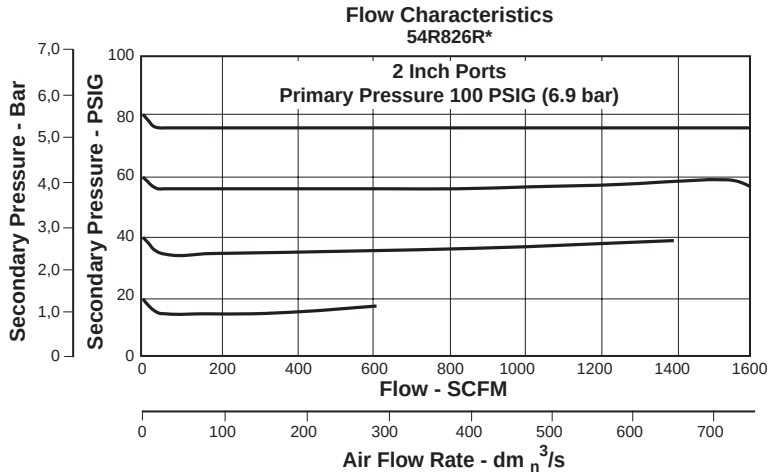

54R Regulator Kits & Accessories

Adjustment Dial Knob RRP-16-024-80
O-ring, Repair Kit GRP-95-262-80
Piston, Bottom and O-ring Seal RRP-95-192-80
Pistons and Bonnet Repair Kit RRP-95-766-80
Spring, Regulation, Belleville Washer –
2 to 40 PSIG Range RRP-95-906-80
5 to 160 PSIG Range RRP-95-905-80
Spring, Main Valve RRP-95-024-80
Tamper Resistant Kit RRP-95-585-80
Valve, Main with O-ring Seal RRP-95-153-80
Valve, Pilot with O-ring and Valve Spring RRP-96-935-80

Specifications

Adjusting Range Pressure ..... 2 to 40 PSIG (0 to 2.8 bar)
5 to 160 PSIG (0 to 11.0 bar)
Bleed Rate ..... 0.05 SCFM
Gauge Ports ..... Two Ports 1/4"
(Can be used as additional High Flow 1/4 Inch Outlet Ports)
Maximum Operating Temperature ..... 150°F (65.5°C)
Maximum Supply Pressure ..... 300 PSIG (20.7 bar)
Port Threads ..... 1-1/2", 2"
Weight ..... 9 lb. (4.1 kg)

Materials of Construction

Body ..... Zinc
Bonnet ..... Zinc / Brass
Piston ..... Zinc
Seals ..... Nitrile
Springs ..... Steel
Valve Assembly ..... Brass / Nitrile / Acetal

Parker Hannifin Corporation
Pneumatic Division
Richland, Michigan
www.parker.com/pneumatics

P3RA302 Regulator – Compact High Precision

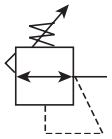

Features

- Control sensitivity of .250" (.63 cm) water column variation allows use in precision applications.
- A compensating diaphragm lets the regulator remain unaffected by supply pressure changes.
- Flow of up to 40 SCFM with 100 PSIG supply allows use in applications with high flow requirements.
- An aspirator tube compensates downstream pressure droop under flow conditions.
- A separate Control Chamber isolates the diaphragm from the main flow to eliminate hunting and buzzing.
- Unit construction lets you service the Regulator without removing it from the line.

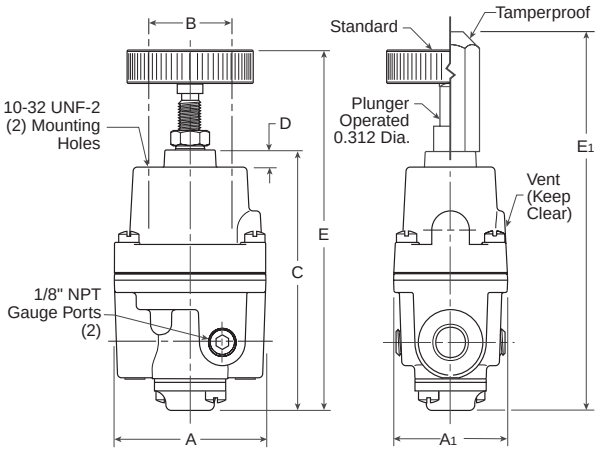

P3RA302 Regulator Dimensions		
A 2.25 (57.3)	**A1** 1.70 (43.1)	**B** 1.25 (31.8)
C 3.81 (96.7)	**D** 0.25 (6.4)	**E** 5.22 (132.6)
E1 5.56 (141.1)		

Inches (mm)

The P3RA302 Regulator is designed for applications that require high capacity and accurate process control in a small package. A poppet valve which is balanced by utilizing a convoluted diaphragm, insures a constant output pressure even during wide supply pressure variations. Stability of regulated pressure is maintained under varying flow conditions through the use of an aspirator tube which adjusts the air supply in accordance with the flow velocity.

⚠ WARNING

Product rupture can cause serious injury.
Do not connect regulator to bottled gas.
Do not exceed maximum primary pressure rating.

Ordering Information

P3RA302	4	2	

Springs

3	**0.5 to 30 PSIG**
4	**1 to 60 PSIG**
5	**2 to 100 PSIG**

Pipe Size

2 1/4" NPT

Options

Blank	**No Options**
H	BSPP
N	Non-Relieving

Note: Other Spring Ranges, Port Sizes, and Options Available. Please Consult Factory

BOLD ITEMS ARE MOST POPULAR.

Parker Hannifin Corporation
Pneumatic Division
Richland, Michigan
www.parker.com/pneumatics

Technical Information

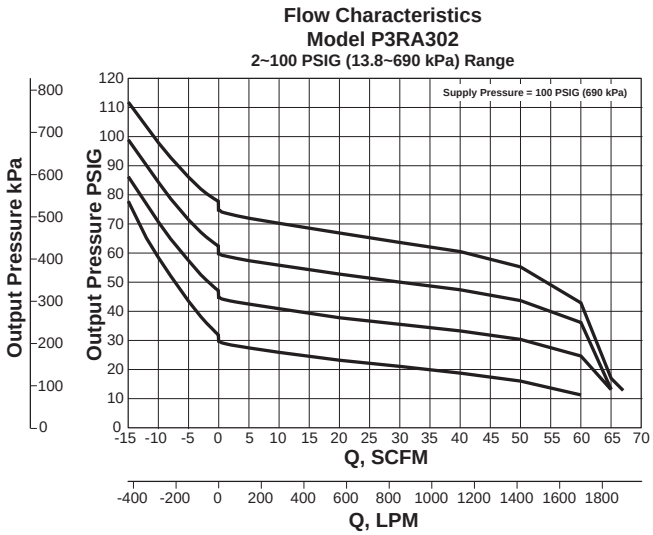

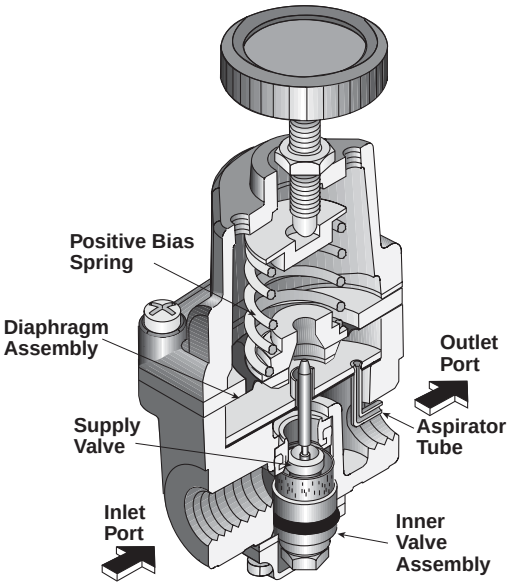

Operating Principles

The P3RA302 Regulator uses the force balance principal to control the movement of the valve assembly which in turn controls the output pressure. When the regulator is adjusted for a specific set point, the downward force of the Positive Bias Spring causes the Diaphragm Assembly to move downward. The Supply Valve opens and allows air to pass to the Outlet Port. As the set point is reached, the downward force exerted by the Positive Bias spring is balanced by the upward force of the downstream pressure acting on the bottom of the Diaphragm Assembly. The resultant force moves the supply Valve upward to reduce the flow of air to the Outlet Port.

Outlet pressure is maintained as a result of balance between forces acting on the top and bottom of the Diaphragm Assembly.

P3RA302 Kits and Accessories

Service Kits –

1/2 to 30, 1 to 60, & 2 to 100 PSIG,
Nitrile, Standard..... PS16116-13

1/2 to 30, 1 to 60, & 2 to 100 PSIG,
Nitrile, Non-relieving PS16116-14

Tamper Resistant Kit..... PS12163

Mounting Bracket Kit PS417BP

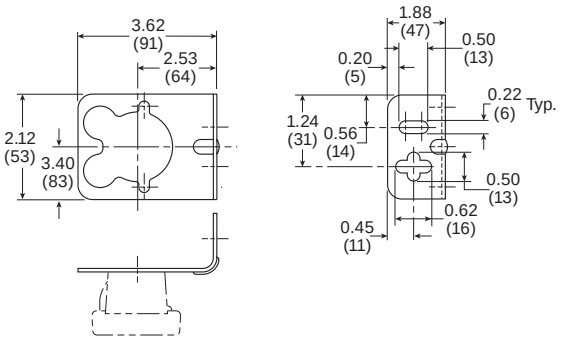

Specifications

Supply Pressure..... 250 PSIG, (17.0 bar), (1700 kPa) Maximum

Flow Capacity –
40 SCFM (68 m^3/HR) @ 100 PSIG, (7.0 bar), (700 kPa) Supply and 20 PSIG, (1.5 bar), (150 kPa) Setpoint

Exhaust Capacity –
2.0 SCFM (3.4 m^3/HR) where Downstream Pressure is 5 PSIG, (.35 bar), (35 kPa) above 20 PSIG, (1.5 bar), (150 kPa) Setpoint

Supply Pressure Effect –
Less than 0.2 PSIG, (.014 bar), (.14 kPa) for 100 PSIG, (7.0 bar), (700 kPa) change in Supply Pressure

Sensitivity..... .250" (.010 PSIG) (.64 cm) Water Column

Ambient Temperature .....-40°F to +200°F, (-40°C to 93°C)

Hazardous Locations –
Acceptable for use in Zones 1 and 2 for Gas Atmosphere: Groups IIA and IIB and Zones 21 and 22 for Dust Atmospheres

Materials of Construction

Body and Housing ..... Aluminum

Diaphragms..... Nitrile on Dacron

Trim..... Brass

Parker Hannifin Corporation
Pneumatic Division
Richland, Michigan
www.parker.com/pneumatics

P3RA102 Regulator – Standard High Precision

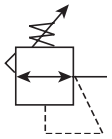

Features

- Control sensitivity of .125" (.32) water column allows use in precision processes.
- Pressure balanced supply valve prevents supply pressure changes from affecting the setpoint.
- Optional check valve permits dumping of downstream pressure when supply is opened to atmosphere.
- Separate control chamber isolates the diaphragm from the main flow to eliminate hunting and buzzing.
- An aspirator tube compensates downstream pressure droop under flow conditions.

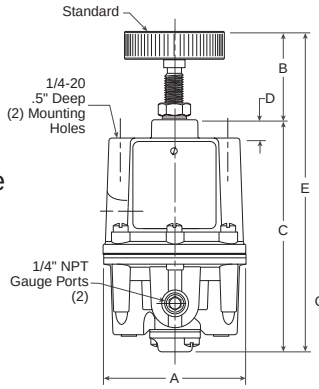

2 thru 200 PSIG Range

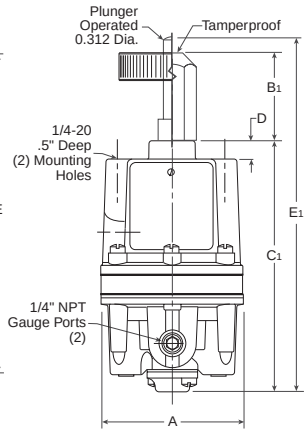

300 & 400 PSIG Range

P3RA102 Regulator Dimensions		
A 3.00 (76.2)	**B** 2.22 (56.5)	**B1** 2.13 (53.9)
C 4.42 (111.9)	**C1** 4.78 (121.6)	**D** 0.38 (9.4)
E 6.63 (168.5)	**E1** 7.28 (184.9)	

Inches (mm)

The P3RA102 Regulator is designed for applications that require high capacity and accurate process control. A poppet valve which is balanced by utilizing a rolling diaphragm, insures a constant output pressure even during wide supply pressure variations. Stability of regulated pressure is maintained under varying flow conditions through the use of an aspirator tube which adjusts the air supply in accordance with the flow velocity.

⚠ WARNING

Product rupture can cause serious injury.
Do not connect regulator to bottled gas.
Do not exceed maximum primary pressure rating.

Ordering Information

P3RA102	6	2	

Springs	
3	**0.5 to 30 PSIG**
4	**1 to 60 PSIG**
6	**2 to 150 PSIG**

Pipe Size
2 1/4" NPT

Options	
Blank	**No Options**
H	BSPP
N	Non-Relieving

Note: Other Spring Ranges, Port Sizes, and Options Available. Please Consult Factory

BOLD ITEMS ARE MOST POPULAR.

Parker Hannifin Corporation
Pneumatic Division
Richland, Michigan
www.parker.com/pneumatics

Technical Information

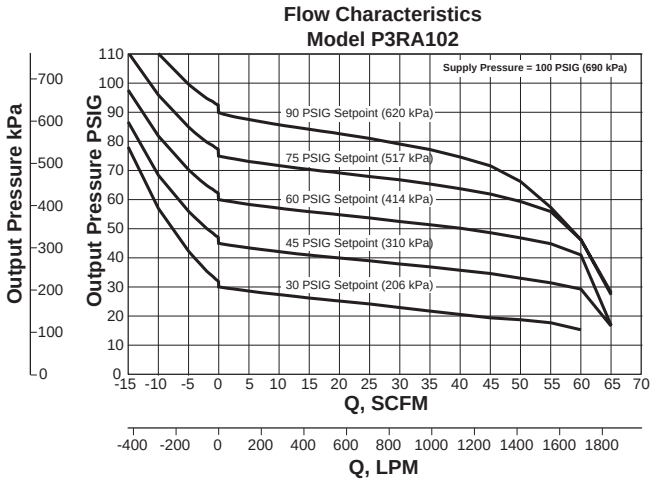

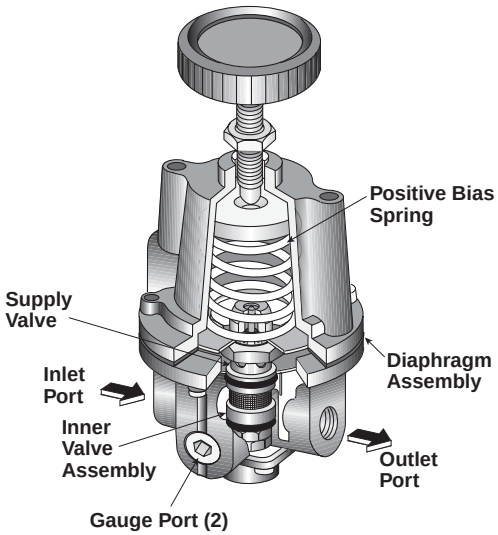

Operating Principles

The P3RA102 Series regulator use the force balance principal to control the movement of the Valve Assembly that controls the output pressure. When the regulator is adjusted for a specific set point, the downward force of the Positive Bias Spring moves the Diaphragm Assembly downward. The Supply Valve opens and allows air to pass to the Outlet Port. As the set point is reached, the downward force exerted by the Positive Bias Spring is balanced by the force of the downstream pressure that acts on the Diaphragm Assembly. The resultant force moves the Supply Valve upward to reduce the flow of air to the Outlet Port.

Outlet pressure is maintained as a result of balance between forces acting on the top and bottom of the Diaphragm Assembly.

P3RA102 Kits & Accessories

Mounting Bracket Kit –
Zinc Plated Steel PS09921

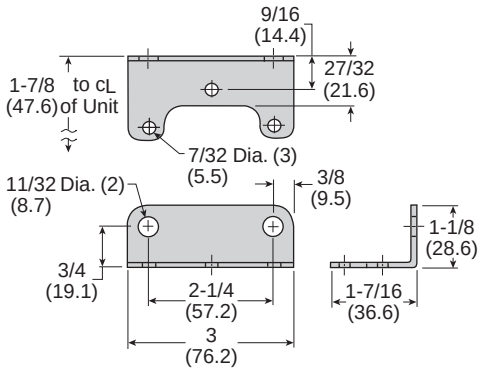

Service Kits –
0 to 200 PSIG, Relieving PS12125-1
0 to 200 PSIG, Non-relieving PS12125-4

Tamper Resistant Kit PS12165

Specifications

Supply Pressure ..... 500 PSIG, (35.0 bar), (3500 kPa) Maximum

Flow Capacity –
40 SCFM (68 m^3/HR) @ 100 PSIG, (7.0 bar), (700 kPa) Supply and 20 PSIG, (1.5 bar), (150 kPa) Setpoint

Exhaust Capacity –
5.5 SCFM (9.35 m^3/HR) where Downstream Pressure is 5 PSIG, (.35 bar), (35 kPa) above 20 PSIG, (1.5 bar), (150 kPa) Setpoint

Supply Pressure Effect –
Less than 0.1 PSIG, (.007 bar), (.7 kPa) for 100 PSIG, (7.0 bar), (700 kPa) change in Supply Pressure

Sensitivity ..... .125" (.005 PSIG) (.32 cm) Water Column

Ambient Temperature ..... -40°F to +200°F, (-40°C to 93°C)

Hazardous Locations –
Acceptable for use in Zones 1 and 2 for Gas Atmosphere: Groups IIA and IIB and Zones 21 and 22 for Dust Atmospheres

Materials of Construction

Body and Housing ..... Aluminum

Diaphragms ..... Buna N on Dacron (Standard Unit Only)

Trim ..... Brass, Zinc Plated Steel

Parker Hannifin Corporation
Pneumatic Division
Richland, Michigan
www.parker.com/pneumatics

P3RA102BP Relief Valve – High Precision

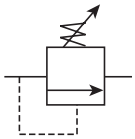

Features

- Control sensitivity of .125" (.32) water column allows use in precision applications.
- A separate Control Chamber and Aspirator Tube isolate the diaphragm from the main flow to eliminate hunting and buzzing.
- Unit construction lets you service the P3RA102BP without removing it from the line.
- Mounting Bracket is available.

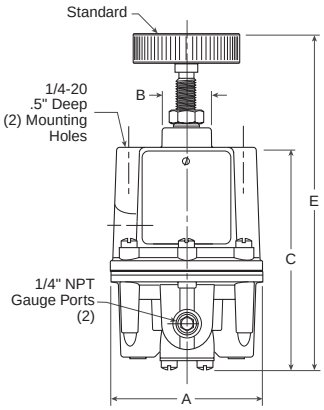

2 thru 200 PSIG Range

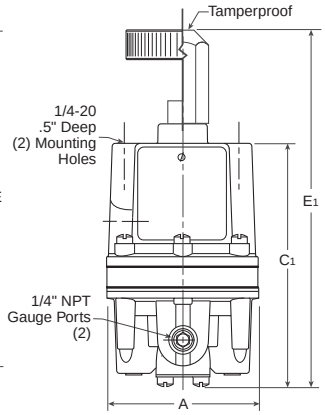

300 & 400 PSIG Range

P3RA102BP Regulator Dimensions		
A	**B**	**C**
3.00 (76.2)	0.97 (24.6)	4.19 (106.4)
C_1	**E**	**E_1**
4.56 (115.9)	6.31 (160.3)	6.75 (171.4)

Inches (mm)

The P3RA102BP is a high capacity relief valve that relieves excess pressure in a pneumatic system.

The P3RA102BP provides greater accuracy than standard relief valves over a narrow pressure range. The P3RA102BP is an excellent choice for a wide range of precision applications.

⚠ WARNING

Product rupture can cause serious injury.
Do not connect regulator to bottled gas.
Do not exceed maximum primary pressure rating.

Ordering Information

P3RA102	6	2	BP	

Springs	
3	**0.5 to 30 PSIG**
4	**1 to 60 PSIG**
6	**2 to 150 PSIG**

Pipe Size	
2	**1/4" NPT**

Options	
BP	**Back Pressure**

Options	
Blank	**No Options**
H	BSPP
N	Non-Relieving

Note: Other Spring Ranges, Port Sizes, and Options Available. Please Consult Factory

BOLD ITEMS ARE MOST POPULAR.

Parker Hannifin Corporation
Pneumatic Division
Richland, Michigan
www.parker.com/pneumatics

Technical Information

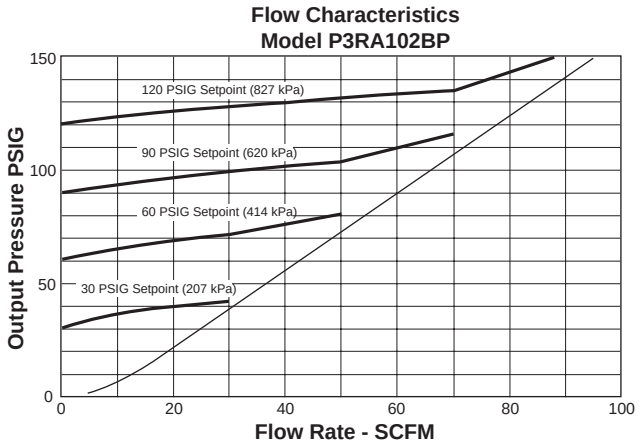

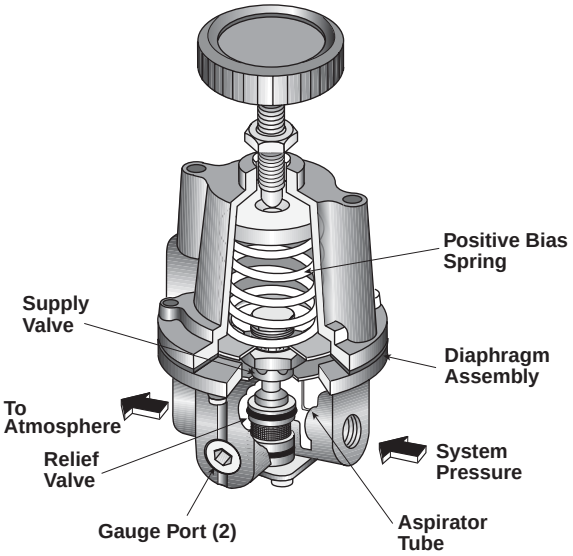

Operating Principles

The P3RA102BP Regulator uses the force balance principle to open the Relief Valve and vent system pressure when the set point is exceeded.

Downstream pressure is transmitted through the Aspirator Tube to the bottom of the Diaphragm Assembly. When you adjust the range screw for a specific set point, the Positive Bias Spring compresses and exerts a force on the top of the Diaphragm Assembly. As long as the pressure acting on the bottom of the Diaphragm Assembly produces a force less than the spring force acting on the top of the Diaphragm Assembly, the Relief Valve remains closed. When system pressure increases, the force on the bottom of the Diaphragm Assembly increases until it reaches the set point. When system pressure increases beyond the set point, the assembly moves upward, lifting the Relief Valve from its seat and vents the downstream air.

If downstream pressure decreases below the set point, the assembly moves downward closing the Relief Valve.

P3RA102BP Kits & Accessories

Mounting Bracket Kit –
Zinc Plated Steel PS09921

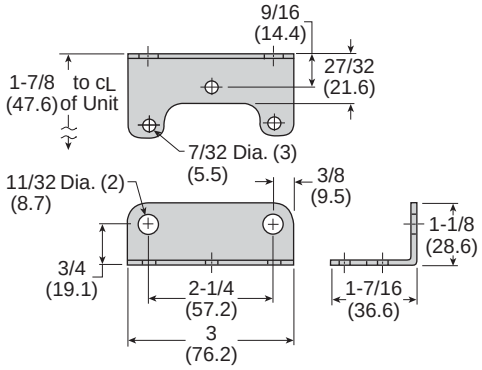

Service Kits –
0 to 200 PSIG, Standard PS12127-1

Tamper Resistant Kit PS12165

Specifications

Set Point Range	System Pressure (Maximum)
2-200 PSIG (0.15-14 bar) (15-1400 kPa)	300 PSIG (21.0 bar) (2100 kPa)
300-400 PSIG (21-28 bar) (2100-2800 kPa)	500 PSIG (35.0 bar) (3500 kPa)

Flow Capacity (SCFM) –
40 (68 m^3/HR) @ 100 PSIG, (7.0 bar), (700 kPa) System Pressure

Sensitivity..... .125" (.005 PSIG) (.32 cm) Water Column

Ambient Temperature ..... -40°F to +200°F, (-40°C to +93°C)

Materials of Construction

Body and Housing..... Aluminum

Trim.....Zinc Plated Steel, Brass

Nozzle ..... Nitrile on Dacron

Parker Hannifin Corporation
Pneumatic Division
Richland, Michigan
www.parker.com/pneumatics

P3RA171 Vacuum Regulator – High Precision

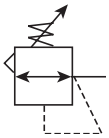

Features

- Control sensitivity of .125" (.32) water column allows use in precision applications.
- Balanced supply valve minimizes effects of vacuum variation.
- Aspirator tube compensates for downstream pressure droop under flow conditions.
- Separate control chamber isolates the diaphragm from the main flow to eliminate hunting and buzzing.
- Construction allows servicing without removing from the line.

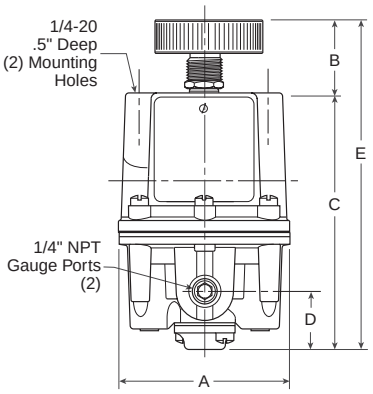

P3RA171 Regulator Dimensions		
A 3.00 (76.2)	**B** 1.13 (28.7)	**C** 4.83 (122.6)
D 1.00 (25.4)	**E** 5.96 (151.3)	

Inches (mm)

The P3RA171 is a high accuracy vacuum regulator that provides uniform vacuum regulation independent of vacuum supply changes and flow demand.

This unit has a diaphragm assembly with three springs to provide a more balanced loading of the diaphragm.

⚠ WARNING

Product rupture can cause serious injury.
Do not connect regulator to bottled gas.
Do not exceed maximum primary pressure rating.

Ordering Information

P3RA171	3	2	N	N	K	N

Springs	Pipe Size	Thread Type	Options	Options	Options
3 0 to 30 Hg	2 1/4" NPT	N NPT	N Nitrile	K Knob Assembly	N Non-Relieving

Note: Other Spring Ranges, Port Sizes, and Options Available.
Please Consult Factory

BOLD ITEMS ARE MOST POPULAR.

Parker Hannifin Corporation
Pneumatic Division
Richland, Michigan
www.parker.com/pneumatics

Technical Information

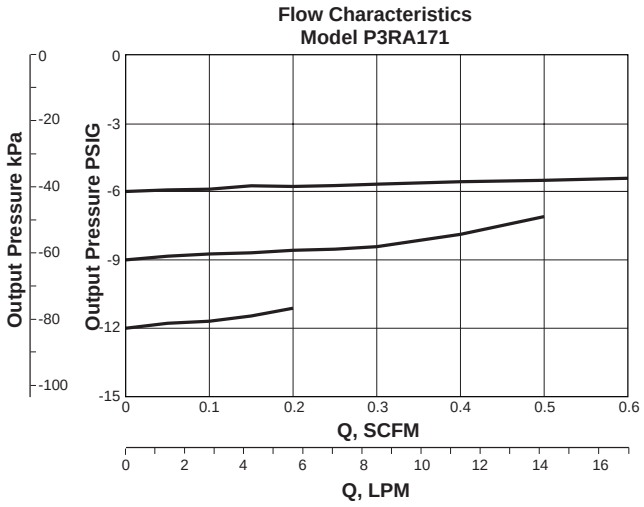

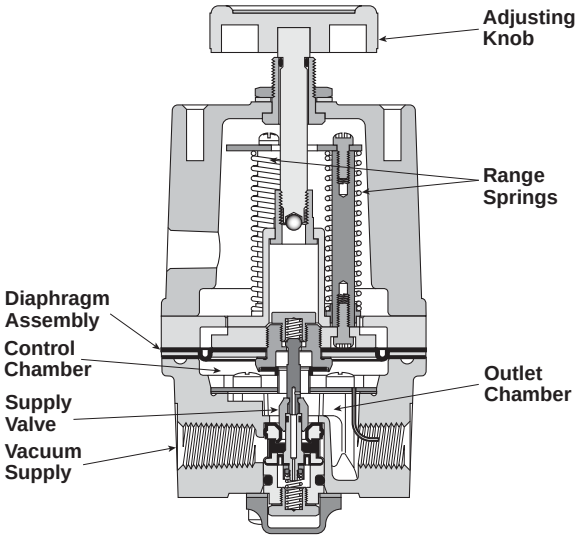

Operating Principles

The Model P3RA171 Series vacuum regulator uses the force balance principle to control the movement of the Valve Assembly that controls output vacuum.

When the regulator is adjusted for a specific set point, the upward force of the Range Springs moves the Diaphragm Assembly upward. The Supply Valve opens and allows air to pass to the inlet port. As the set point is reached, the upward force exerted by the Range Springs is balanced by the force of the vacuum that pulls downward on the Diaphragm Assembly. The resultant force moves the Supply Valve downward to reduce the flow of air to the inlet port. Outlet vacuum is maintained as a result of balance between forces acting on the top and bottom of the Diaphragm Assembly.

P3RA171 Kits and Accessories

Mounting Bracket PS09921

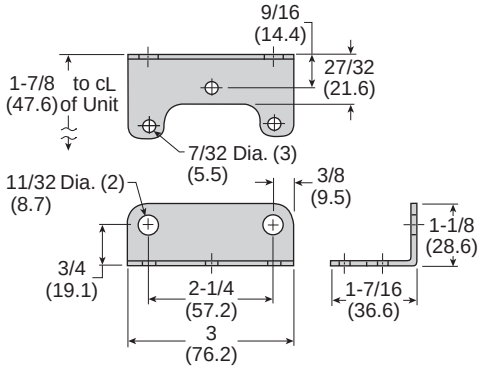

Service Kits –
(Includes Diaphragm Assy, Valve Assy, Seat Assy & Gasket) –
0-30" Hg, Nitrile, Non-relieving PS20966-9

Tamper Resistant Kit PS20967-1

Specifications

Vacuum Supply (Max) .....29.92 Hg (760 torr)

Flow Capacity .....3 SCFM @ 650 torr Supply, 250 torr Setpoint

Sensitivity..... .125" (.005 PSIG) (.32 cm) Water Column

Ambient Temperature ..... -40°F to +200°F, (-40°C to +93°C)

Vacuum Supply Effect –
Less than 1 torr for 100 torr (.04 Hg for 3.94 Hg) Change in Vacuum Supply

Materials of Construction

Body and Housing..... Aluminum

Trim.....Zinc Plated Steel, Brass

Elastomers ..... Nitrile

Parker Hannifin Corporation
Pneumatic Division
Richland, Michigan
www.parker.com/pneumatics

P3EA632 Filter / Regulator – Precision

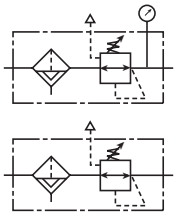

Features

- The no-brass construction is well suited to harsh environments.
- Internal and external epoxy finish for superior corrosion resistance.
- Non-bleed design to reduce consumption.
- Integral Relief Valve.
- A Gauge Port provides convenient pressure gauge mounting.
- The standard 5-micron filter minimizes internal contamination.
- The Filter Dripwell contains a Drain Plug to easily drain trapped liquids.
- Standard Tapped Exhaust.
- Soft Relief Seat minimizes air loss.

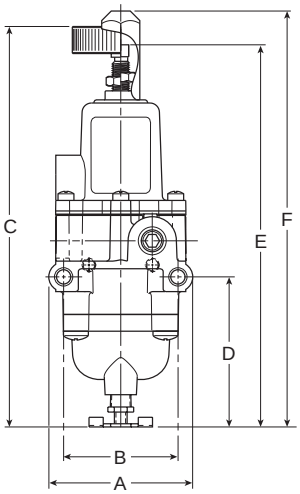

P3EA632 Regulator Dimensions		
A 2.83 (71.9)	**B** 2.25 (57.2)	**C** 7.88 (200)
D 2.96 (75)	**E** 7.52 (1916)	**F** 8.19 (209)

Inches (mm)

⚠ WARNING

Product rupture can cause serious injury.
Do not connect regulator to bottled gas.
Do not exceed maximum primary pressure rating.

Ordering Information

P3EA632	5	2	N	S	

Springs
- 4 1 to 60 PSIG
- **5 2 to 120 PSIG**

Pipe Size
- **2 1/4" NPT**

Thread Type
- **N NPT**
- U BSPP

Adjustment
- **S Screw (Std.)**
- K Knob
- T Tamperproof

Options
- **Blank None**

Note: Other Spring Ranges, Port Sizes, and Options Available.
Please Consult Factory

BOLD ITEMS ARE MOST POPULAR.

Parker Hannifin Corporation
Pneumatic Division
Richland, Michigan
www.parker.com/pneumatics

Technical Information

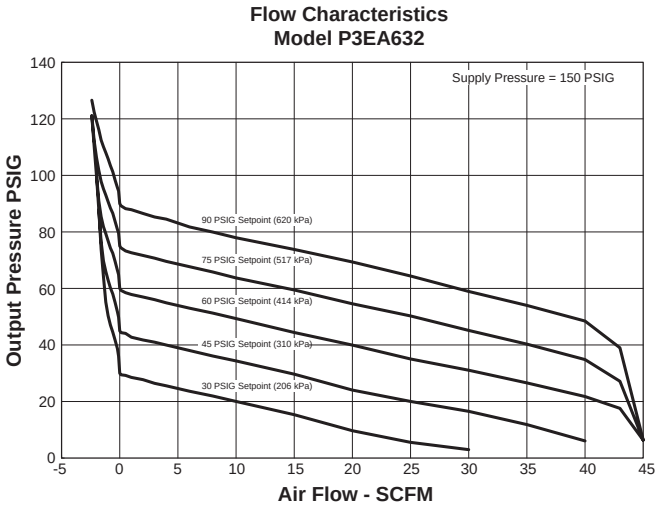

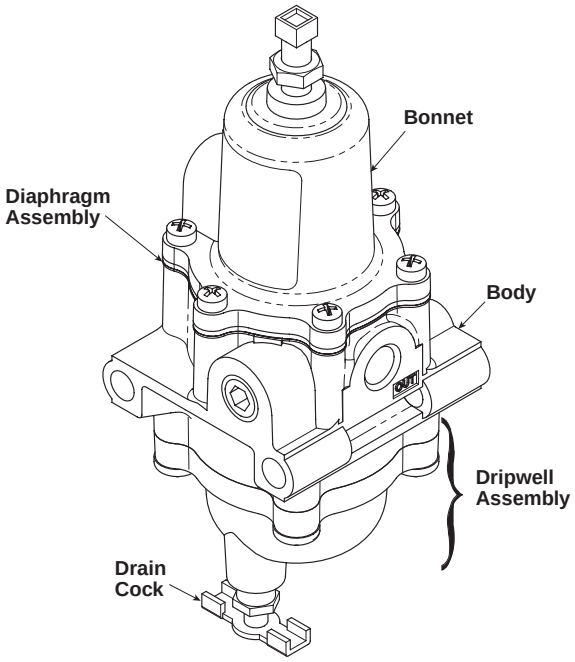

Operating Principles

When you turn the Adjustment Screw to a specific setpoint, the Spring exerts a downward force against the top of the Diaphragm Assembly. This downward force opens the Supply Valve. Output pressure flows through the Outlet Port and the passage to the Control Chamber where it creates an upward force on the bottom of the Diaphragm Assembly.

When the setpoint is reached, the force of the Spring that acts on the top of the Diaphragm Assembly balances with the force of output pressure that acts on the bottom of the Diaphragm Assembly and closes the Supply Valve.

When the output pressure increases above the setpoint, the Diaphragm Assembly moves upward to close the Supply Valve and open the Exhaust Valve. Output pressure flows through the Exhaust Valve and out of the Exhaust Vent on the side of the unit until it reaches the setpoint.

P3EA632 Kits & Accessories

Service Kits –
1 to 60, 2 to 120 PSIG PS19968-NR

Tamper Resistant Kit PS12165

Specifications

Supply Pressure ..... 250 PSIG, (17 bar), (1700 kPa) Maximum

Flow Capacity (SCFM) ..... 25 (42.5 m^3/HR) @ 100 PSIG, (7 bar), (700 kPa) supply and 20 PSIG, (1.5 bar), (150 kPa) setpoint

Exhaust Capacity (SCFM) ..... 0.8 (1.36 m^3/HR) where downstream pressure is 5 PSIG, (.35 bar), (35 kPa) above 20 PSIG, (1.5 bar), (150 kPa) setpoint. (0.8 SCFM for 120 # unit)

Maximum Supply Pressure ..... 250 PSIG, (14 bar), (1400 kPa)

Consumption ..... Undetectable

Supply Pressure Effect ..... Less than 1.25 PSIG, (.09 bar), (9 kPa) change for 100 PSIG, (7.0 bar), (700 kPa) change in supply pressure (1.90 PSIG for 120 # unit)

Sensitivity ..... 1.0" (.036 PSIG) (2.54 cm) Water Column

Temperature Range ..... -40° F to + 160° F, (-40° C to + 71° C)

Materials of Construction

Body and Housing ..... Epoxy Coated Aluminum

Trim ..... Stainless Steel, Nickel Plated Steel

Elastomers ..... Nitrile

Parker Hannifin Corporation
Pneumatic Division
Richland, Michigan
www.parker.com/pneumatics

P3BA208 Pneumatic Input Signal Amplifier – Precision

Features

- The P3BA208 uses a pneumatic input signal to accurately control output pressure based on a predetermined ratio.
- A balanced Supply Valve minimizes the effects of supply pressure variation.
- An Aspirator Tube compensates downstream pressure droop under flowing conditions.
- Optional Adjustable By-Pass Needle Valve allows tuning for optimum dynamic response (1:1 ratio only).
- Optional Fixed Negative Bias allows operation with pneumatic devices that cannot be adjusted to zero input pressure.
- A separate Control Chamber isolates the diaphragm from the main flow to eliminate hunting and buzzing.
- Unit construction allows servicing without removal.
- Mounting Bracket available.

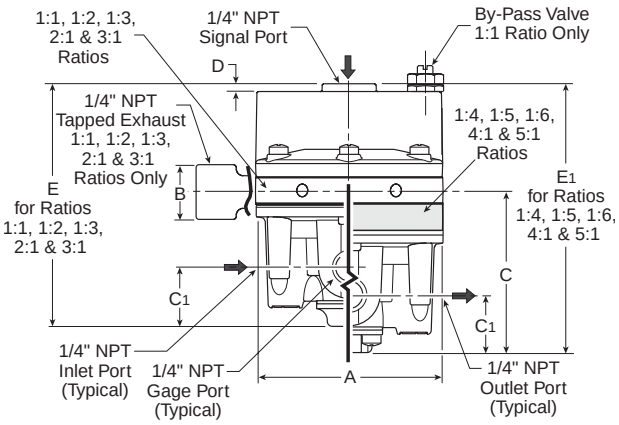

P3BA208 Regulator Dimensions		
A 3.00 (76.2)	**B** .94 (23.8)	**C** 2.13 (53.9)
C_1 .94 (23.8)	**D** .13 (3.2)	**E** 3.88 (98.3)
E_1 4.31 (109.5)		

Inches (mm)

Ordering Information

P3BA208	1	2	

Pilot Ratio
1 1:1
2 1:2
3 1:3

Pipe Size
2 1/4" NPT

Options	
Blank	**No Options**
E	Tapped Exhaust
H	BSPP
I	By-Pass Valve

Note: Other Spring Ranges, Port Sizes, and Options Available. Please Consult Factory

BOLD ITEMS ARE MOST POPULAR.

Parker Hannifin Corporation
Pneumatic Division
Richland, Michigan
www.parker.com/pneumatics

Technical Information

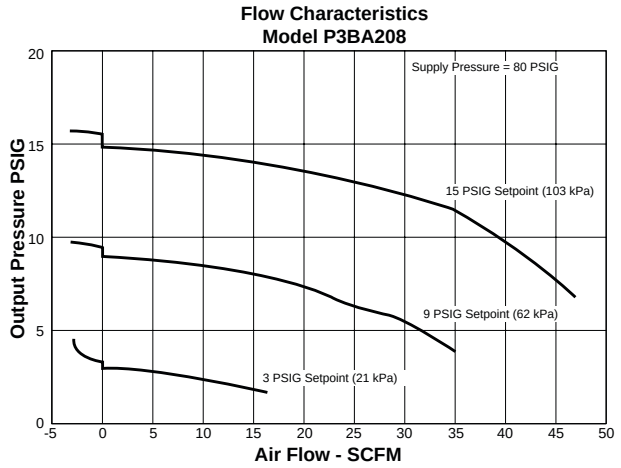

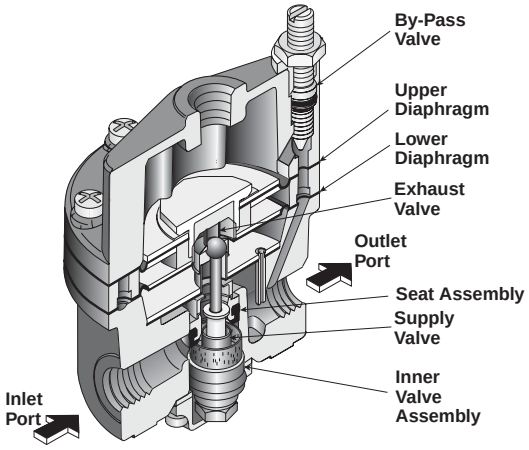

Materials of Construction

Body and Housing ..... Aluminum
Diaphragm..... Nitrile on Dacron Fabric
Trim.....Zinc Plated Steel, Brass

Operating Principles

The P3BA208 Input Signal Amplifier is a pneumatic device capable of high flow and exhaust capacity. This device uses a force balance system to control the movement of the supply and exhaust valves.

At set point, the force due to signal pressure that acts on the top of the Upper Diaphragm balances with the force due to output pressure acting on the bottom of the Lower Diaphragm.

Specifications

	Signal:Output		
Ratio	**1:1**	**1:2**	**1:3**
Maximum Output Pressure, PSIG (bar)	150 (10.0)	150 (10.0)	150 (10.0)
Maximum Supply Pressure, PSIG (bar)	250 (17.0)	250 (17.0)	250 (17.0)
Flow Capacity SCFM, (m^3/HR) 100 PSIG, (7.0 bar) Supply, 20 PSIG, (1.5 bar) Output.	45 (76.5)	45 (76.5)	45 (76.5)
Exhaust Capacity SCFM, (m^3/HR) Downstream Pressure 5 PSIG, (.35 bar) Above Output Pressure Set Point of 20 PSIG, (1.5 bar).	11 (18.7)	11 (18.7)	11 (18.7)
Sensitivity (Water Column)	.250" (.64 cm)	.500" (1.27 cm)	.750" (1.9 cm)
Ratio Accuracy % of 100 PSIG, (7.0 bar) Output Span	1.0	1.0	1.0
% of Output Span with (7.0 bar) Input Span	—	—	—
Supply Pressure Effect, PSIG (bar) for change of 100 PSIG, (7.0 bar).	0.10 (.007)	0.20 (.014)	0.30 (.021)
Ambient Temperature, °F (°C)	-40 to +200 (-40 to +93)		

P3BA208 Kits and Accessories

Mounting Bracket PS09921
Service Kits –
1:1 Ratio PS19513-11
1:1 Ratio w/ By-Pass Valve.....PS19513-11I
1:2 Ratio PS19513-12
1:3 Ratio PS19513-13

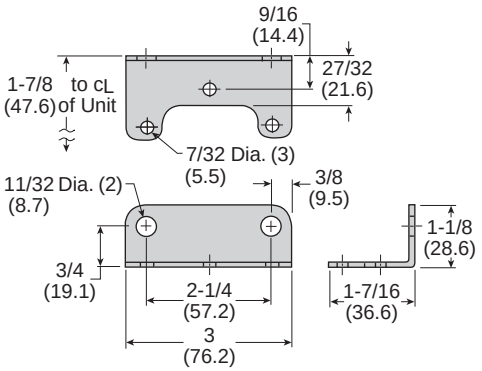

Parker Hannifin Corporation
Pneumatic Division
Richland, Michigan
www.parker.com/pneumatics

P3BA45 Pneumatic Input Signal Amplifier – Precision

Features

- Five signal to output ratios meet most control element requirements.
- Control sensitivity of water column allows use in precision applications.
- Large Supply and Exhaust Valves provide high forward and exhaust flows.
- Soft Supply and Exhaust Valve seats minimize air consumption.
- A balanced Supply Valve minimizes the effect of supply pressure variation.
- An Aspirator Tube compensates downstream pressure droop under flow conditions.
- A separate Control Chamber isolates the diaphragm from the main flow to eliminate hunting and buzzing.
- The optional adjustable By-pass Valve lets you tune for optimum dynamic response. (1:1 ratio only)
- Unit construction lets you service the P3BA45 without removing it from the line.

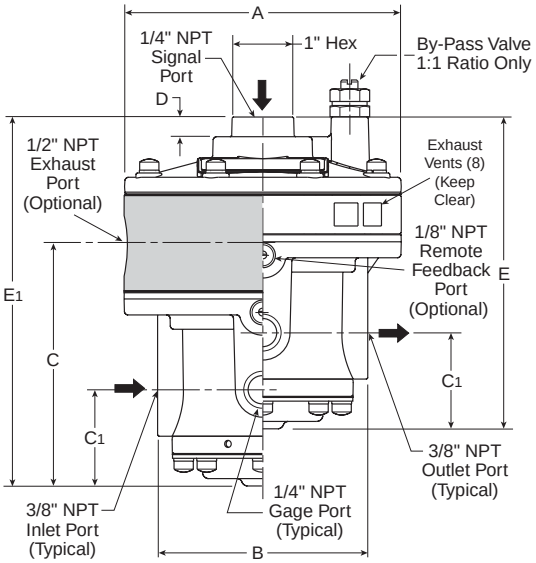

P3BA45 Regulator Dimensions		
A 4.50 (114.3)	**B** 3.41 (86.5)	**C** 3.86 (98)
C_1 1.56 (39.6)	**D** .31 (7.9)	**E** 5.07 (128.8)
E_1 5.83 (148.2)		

Inches (mm)

Ordering Information

P3BA45	1	4	A	

Pilot Ratio
1 1:1
2 1:2
3 1:3

Pipe Size
4 1/2" NPT
6 3/4" NPT

Type
A 45 Series

Options	
Blank	**No Options**
E	Tapped Exhaust
H	BSPP
I	By-Pass Valve

Note: Other Spring Ranges, Port Sizes, and Options Available. Please Consult Factory

BOLD ITEMS ARE MOST POPULAR.

Parker Hannifin Corporation
Pneumatic Division
Richland, Michigan
www.parker.com/pneumatics

Technical Information

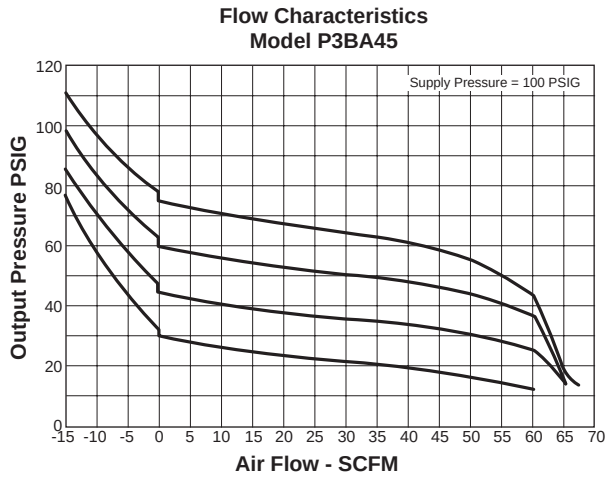

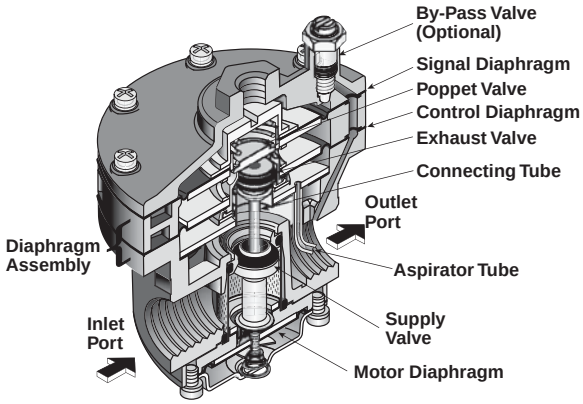

Operating Principles

When signal pressure on the top of the Signal Diaphragm creates a downward force on the Diaphragm Assembly, the Supply Valve opens. Output pressure flows through the Outlet Port and the Aspirator Tube to the Control Chamber to create an upward force on the bottom of the Control Diaphragm. When the setpoint is reached, the force of the signal pressure that acts on the top of the Signal Diaphragm balances with the force of the output pressure that acts on the bottom of the Control Diaphragm to close the Supply Valve.

When the output pressure increases above the signal pressure, the Diaphragm Assembly moves upward to close the Supply Valve and open the Exhaust Valve. Because the Poppet Valve is closed, pressure flows down the Connecting Tube to the bottom of the Motor Diaphragm. This pressure keeps the Supply Valve tightly closed while in the exhaust mode. The Poppet Valve opens and excess output pressure exhausts through the vent in the side of the unit until it reaches the setpoint.

Materials of Construction

Body and Housing ..... Aluminum
Diaphragm ..... Nitrile on Dacron Fabric
Trim ..... Zinc Plated Steel, Brass

Specifications

	Signal:Output		
Ratio	**1:1**	**1:2**	**1:3**
Maximum Output Pressure, PSIG (bar)	150 (10.0)	150 (10.0)	150 (10.0)
Maximum Supply Pressure, PSIG (bar)	250 (17.0)	250 (17.0)	250 (17.0)
Flow Capacity SCFM, (m^3/HR) 100 PSIG, (7.0 bar) Supply, 20 PSIG, (1.5 bar) Output	150 (255)	150 (255)	150 (255)
Exhaust Capacity SCFM, (m^3/HR) Downstream Pressure 5 PSIG, (.35 bar) Above 20 PSIG, (1.5 bar) Setpoint	40 (62.5)	40 (62.5)	40 (62.5)
Sensitivity (water column)	1.0" (2.54 cm)	2.0" (5.08 cm)	3.0" (7.62 cm)
Ratio Accuracy % of 100 PSIG, (7.0 bar) Output Span	3.0	3.0	3.0
% of Output Span with 100 PSIG (7.0 bar) Input Span	—	—	—
Supply Pressure Effect, PSIG (bar) for change of 100 PSIG, (7.0 bar), (700 kPa).	0.10 (.007)	0.20 (.014)	0.30 (.021)
Ambient Temperature, °F (°C)	-40 to +200 (-40 to +93)		
Hazardous Locations	Acceptable for use in Zones 1 and 2 for gas atmosphere; Groups IIA and IIB and Zones 21 and 22 for dust atmospheres.		

P3BA45 Kits and Accessories

Service Kits –

1:1 Ratio PS19549-1
1:1 Ratio w/ Tapped Exhaust PS19549-1E
1:3 Ratio PS19549-3
1:2 Ratio PS19549-2
1:1 w/ Tapped Exhaust, I Option PS19549-20E

Parker Hannifin Corporation
Pneumatic Division
Richland, Michigan
www.parker.com/pneumatics

Notes

Parker Hannifin Corporation
Pneumatic Division
Richland, Michigan
www.parker.com/pneumatics

Proportional Regulators

P31P / P32P Series – Electronic
PAR™-15 Series – Programmable

Section F

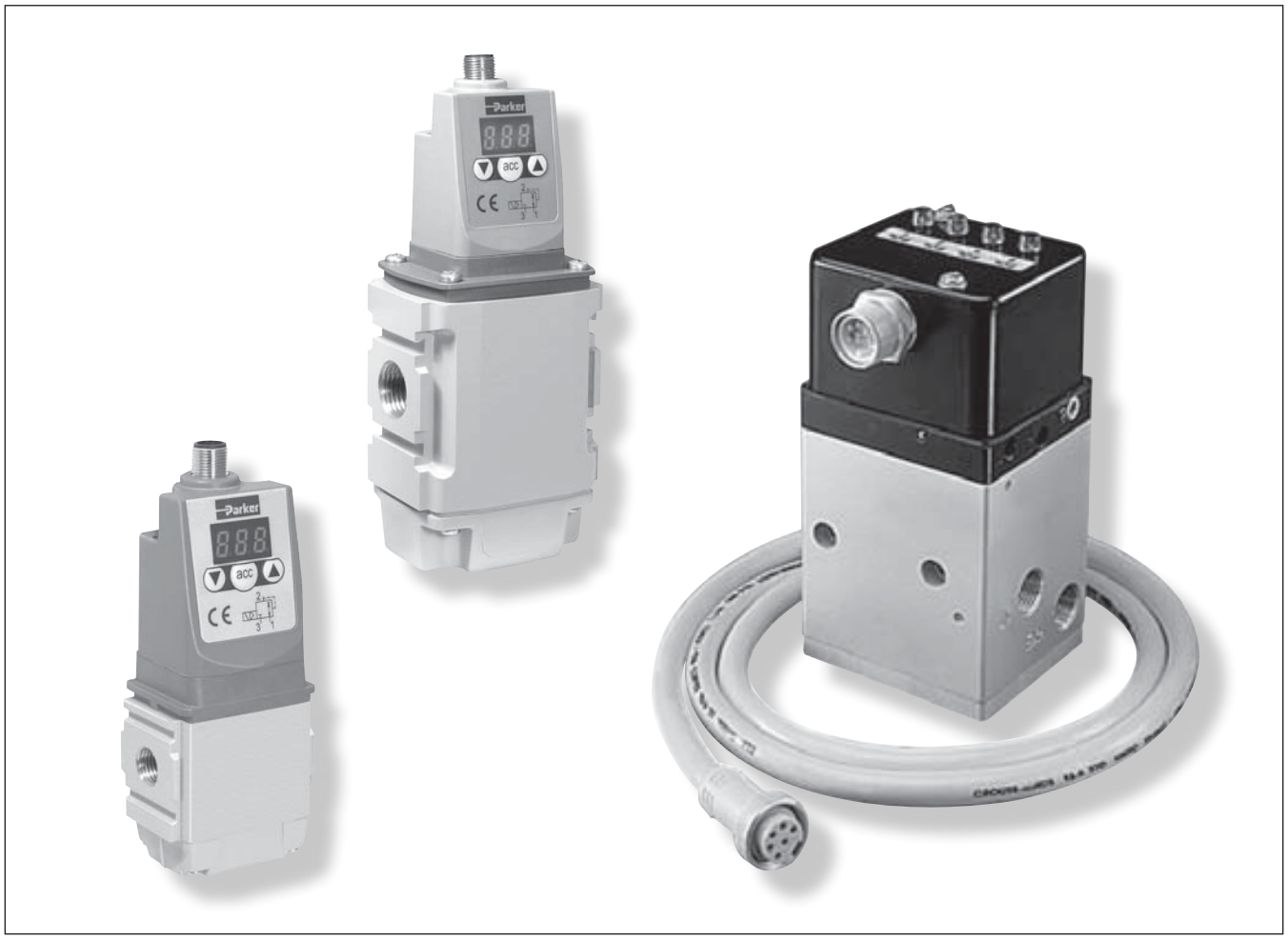

P31P / P32P Series
0 to 10 volt, 4 to 20mA.....F3-F18
PAR™-15 Series
Digital Binary Regulator F19-F28

Bold text part numbers are standard.
Standard text part numbers may have longer lead times.

Parker Hannifin Corporation
Pneumatic Division
Richland, Michigan
www.parker.com/pneumatics

Notes

Parker Hannifin Corporation
Pneumatic Division
Richland, Michigan
www.parker.com/pneumatics

P31P / P32P Series

Electronic Proportional Regulator

0 to 10 volt, 4 to 20 mA

Proportional Regulator Applications.....F4-F5
Features & Benefits.....F6
Ordering Information F7
Technical Information.....F8-F9
Programming Information.....F10-F15
Dimensions.....F16
Troubleshooting F17
Glossary F18

Parker Hannifin Corporation
Pneumatic Division
Richland, Michigan
www.parker.com/pneumatics

Energy Saving

Low Watt Power Consumption

No Unnecessary Loss of Air in Steady State

Man-Machine Interface

High Visibility LED Display

Easy to Read Characters

All Controls on the Same Face

Total Flexibility

User Friendly and Easily Accessible Software Controls

One Basic Unit Suits All Customer Requirements -
0-10V Control Signal Standard
4-20mA Control Signal Software Selectable

Modular Mounting

10 bar & 2 bar Version

Special Applications

Clean Line Design

Suitable for Washdown: IP65

Forced Exhaust Option Available

4 Output Signal Versions Available

Compact and Light Weight

40 & 60 mm Body Sizes

Light Weight Aluminum Bodies

Flexible Mounting Options

Stand-alone or Modular Mounting

Foot Bracket Mounting

DIN-Rail Mounting

Outstanding Performance

Very Fast Response Times

Full Flow Exhaust

Excellent Linearity

High Flow

Parker Hannifin Corporation
Pneumatic Division
Richland, Michigan
www.parker.com/pneumatics

Generic Industries

The new Proportional Regulator is designed to quickly and accurately adjust and maintain a set output pressure.

The unit will operate regardless of flow, in response to an electronic control signal. The media can be compressed air or an inert gas.

Applications for this technology are virtually unlimited; from paint spray control, paper manufacturing and printing to weaving and laser cutting control; in fact anywhere that requires accurate remote pressure control.

Automation

In the field of general automation, the need to control processes or movement via electronic signals is of paramount importance. The Proportional Regulator unit provides the facility to incorporate pressure control into a fully integrated control system.

Packaging and Food

The Packaging and Food industry provides another ideal area for application of the Electronic Proportional Regulator, where fine control of tension on wrapping foils and paper is required. The degree of control and the ability to manually change parameters makes this unit ideally suited to the varying requirements of this industry.

Automotive

Applications for this innovative product in the Automotive industry can be seen in major manufacturers' "body-in-white" lines.

The control of clamping and welding forces during panel assembly is an ideal application, also accurate control in paint dipping and spraying can be achieved.

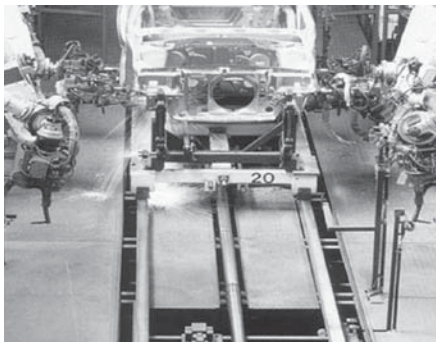

Parker Hannifin Corporation
Pneumatic Division
Richland, Michigan
www.parker.com/pneumatics

Why Proportional Technology?

The Difference Between Open or Closed Circuit Control

Standard pressure regulators go a long way towards meeting customers needs. In most cases these regulators work well in general pneumatic and automation applications. However, sometimes the application calls for more precise pressure control. The effects of time, cycling, input, back pressure or pressure and flow variation can all cause inconsistencies in pneumatic systems. Proportional Regulators are designed to eliminate those inconsistencies.

Open Control Circuit

In a normal pressure regulated control system, the inlet pressure (p1) is converted into the output pressure (p2) by the regulator. The set pressure (set value) is usually manually set by adjusting the control knob and in normal circumstances the regulator maintains the output pressure (actual value).

No facility for monitoring the output pressure is provided and there is consequently no way of checking that the set value and the actual value are the same. Also, no account is taken of external influences such as air consumption by the system, which can drastically alter the actual value.

Closed Loop Control Circuit

The input signal (Electronic Control Signal) is converted into the output value (P2 Output Pressure). This output value is continuously measured and compared with the input signal. If they are different, the unit adjusts the output value to correspond to the set value, to close the loop.

Proportional Pressure Regulators

The Proportional Regulators provide all the advantages of a closed circuit regulated system. When a set value is defined via the input signal (e.g. 0-10 V), the pressure regulator sets the corresponding output pressure (e.g. 0-150 PSI/0-10 bar). At the same time the integrated pressure sensor measures the actual pressure at the unit's outlet (actual value).

If the electronic regulation system finds that the actual value has deviated from the set value, it immediately corrects the actual value. This is a continuous process ensuring fast, accurate pressure regulation.

Typical Application in Automotive Body in White Welding Pressure Control

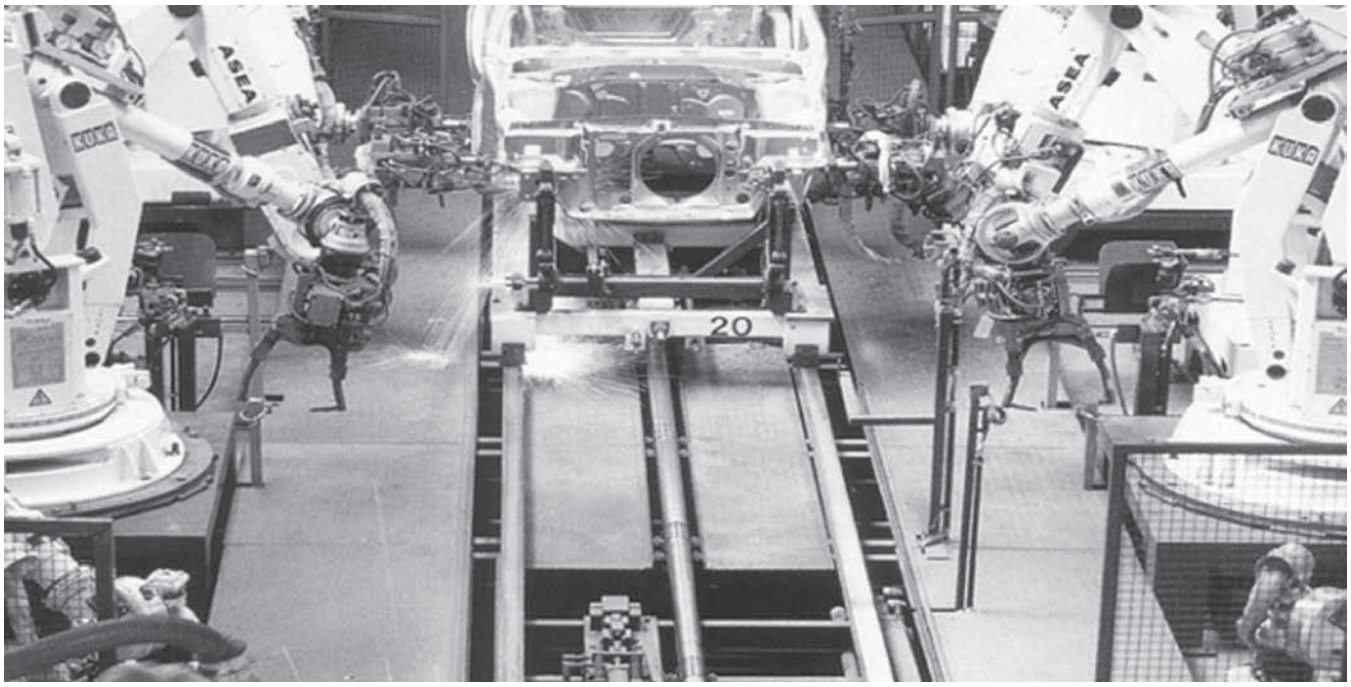

Parker Hannifin Corporation
Pneumatic Division
Richland, Michigan
www.parker.com/pneumatics

P31P Series
Bottom exhaust

P32P Series
Bottom exhaust

Features

- Very fast response times
- Accurate output pressure
- Micro parameter settings
- Selectable I/O parameters
- Quick, full flow exhaust
- LED display indicates output pressure
- No air consumption in steady state
- Multiple mounting options
- Protection to IP65
- P31P flows to 19 dm^3/s (40 scfm)
- P32P flows to 57 dm^3/s (120 scfm)

Ordering Information

P 3 [ ] P A 1 [ ] A [ ] 2 [ ] [ ] 1 A

Body size	
Global Mini (1/4")	1
Global Compact (1/2")	2

Thread type	
BSPP	1
BSPT	2
NPT	9

Port size	
Global Mini (1/4")	2
Global Compact (1/2")	4

Version	
Bottom ported exhaust (NC)	A
Bottom ported forced exhaust (NO)*	E

* When the supply voltage is lost the unit will automatically exhaust the regulated pressure to 0 bar (atmospheric pressure)

Pressure Range	
0 - 2 bar (0-29 psig)	Z
0 - 10 bar (0-145 psig)	D

Power supply	
24 volts	2

Control Signal	
0-10 V†	V

† Factory setting is 0-10 V control signal. 4-20 mA control signal available via parameter 4 on keypad.

Output Signal	
Digital, PNP	D
PNP or 0-10V	P
NPN or 0-10V	N
4-20mA fixed	M

D) Digital PNP output only, no analog output selectable
P) Digital PNP and analogue 0-10V outputs selectable, by means of parameter 6. (Factory default 0-10V)
N) Digital NPN and analog 0-10 V outputs selectable by means of parameter 6. (Factory default 0-10V)
M) Analog 4-20mA output only.
Note: On all analog outputs the F.S. value can be adjusted by means of parameter 8

Input connector	
M12 (4 pin)	1

P31P Mounting Brackets

Order Code	Description
P3HKA00ML	L-Bracket mounting kit
P3HKA00MC	Foot bracket mounting kit

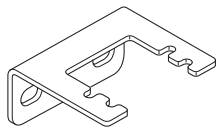

L-Bracket

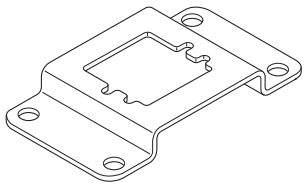

Foot Bracket

P32P Mounting Brackets

Order Code	Description
P3KKA00ML	L-Bracket mounting kit
P3KKA00MC	Foot bracket mounting kit

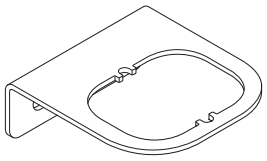

L-Bracket

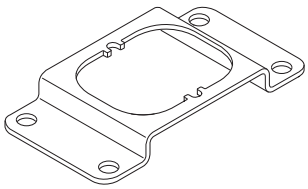

Foot Bracket

Cables

Order Code	Description
CB-M12-4P-2M	2 mtr. cable with moulded straight M12x1 connector

Note:
These brackets fit both Proportional Regulators and Combined Soft Start & Dump Valves.

Parker Hannifin Corporation
Pneumatic Division
Richland, Michigan
www.parker.com/pneumatics

Technical Information

Working media

Compressed air or inert gasses, filtered to Min. 40µ, lubricated or non-lubricated, dried or un-dried, pressure dewpoint 3-5°C.

Operating pressure

Max. Operating Pressure

2 bar unit.....3 bar (43.5 PSI)
10 bar unit .....10.5 bar (152 PSI)
Min. Operating Pressure .....P2 Pressure + 0.5 bar

Pressure control range

Available in three pressure ranges, 0-2 bar, 0-7 bar or 0-10 bar. Pressure range can be changed through the software at all times. (parameter 19)

Temperature range

32°F to 122°F (0°C to 50°C)

Weight

P31P = 0.291 kg (0.64 lbs)
P32P = 0.645 kg (1.42 lbs)

Air consumption

No consumption in stable regulated situation.

Display

The regulator is provided with a digital display, indicating the output pressure, either in PSI or bar. The factory setting is as indicated on the label, can be changed through the software at all times (parameter 14).

Supply voltage

24 VDC +/- 10%

Power consumption

Max. 1.1W with unloaded signal outputs

Control signals

The electronic pressure regulator can be externally controlled through an analogue control signal of either 0-10V or 4-20mA. (parameter 4).

Output signals

As soon as the output pressure is within the signal band a signal is given of 24V DC, PNP Ri = 1 kOhm Outside the signal band this connection is 0V.

Connections

(In case of output signal (Option D)
Central M12 connector 4-pole

ISO 20401

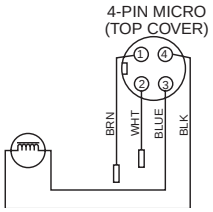

The electrical connections are as follows:

Pin No.		Function	Color
1	24 V	Supply	Brown
2	0 to 10 V	Control Signal Ri = 100k Ω	White
	4 to 20mA	Control Signal Ri = 500k Ω	
3	0 V (GND)	Supply	Blue
4	24 V	Alarm Output Signal	Black

Schematic

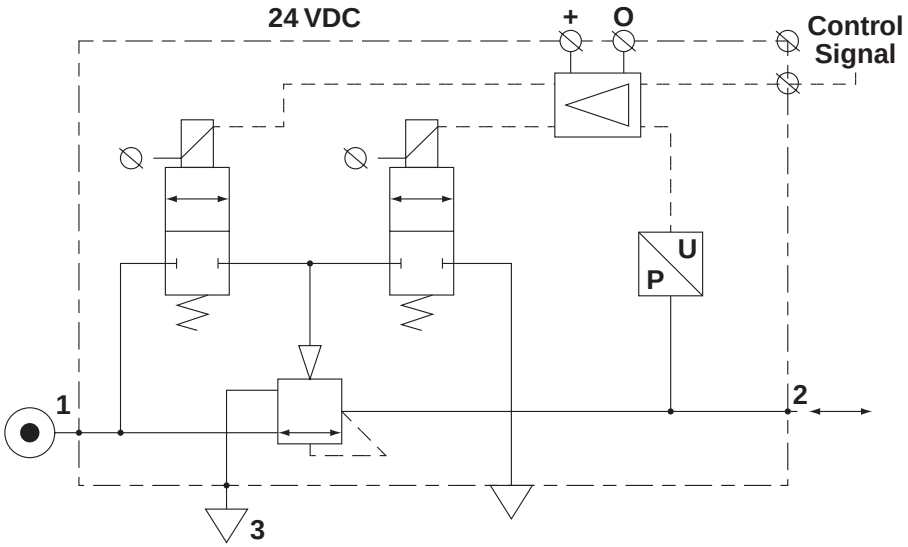

Parker Hannifin Corporation
Pneumatic Division
Richland, Michigan
www.parker.com/pneumatics

Technical Information

Dead Band
The dead band is preset at 1.3% of Full Scale*, adjustable via parameter 13.

Accuracy
Linearity: = < 0.3% of Full Scale.*

Proportional Band
The proportional band is preset at 10% of Full Scale.*

Fail Safe Operation
- If the P31P / P32P unit has an “0” or “A” in the 12th digit of the model number

  – When the supply voltage drops, the electronic control reverts to the fail safe mode. The last known output pressure air consumption. The digital display indicates the last known pressure setting.

  – When the supply voltage is reinstated to the correct level, the valve moves from the fail safe mode and the output pressure immediately follows the control signal requirement. The display indicates the actual output pressure.

  – Note: In the event of loss of both power and inlet pressure the unit will exhaust downstream pressure.

- If the P31P / P32P unit has an “E” in the 12th digit of the model number

  – When the supply voltage drops, the electronic control reverts to “Forced Exhaust Mode” and will automatically exhaust the downstream (regulated) pressure.

  – When the supply voltage is reinstated to the correct level the unit will return to normal operation and follows the control signal requirement. The display indicates the actual pressure.

- If the unit has been programmed in manual mode (not with a control signal) the unit will EXHAUST and the regulator will need to be reset when power is applied.

Full Exhaust
Complete exhaust of the regulator is defined as P2 ≤ 1% Full Scale

* Full Scale (F.S.)
For 2 bar (29 psig) versions this will be 2 barr (29 psig), for the 10 bar (145 psig) version full scale will be 10 bar (145 psig).

Degree of Protection
IP65

EU Conformity
CE: standard
EMC: according to directive 89/336/EEC
The new pressure regulator is in accordance with:

EN 61000-6-1:2001	**EN 61000-6-2:2001**
EN 61000-6-3:2001	**EN 61000-6-4:2001**

These standards ensure that this unit meets the highest level of EMC protection.

Mounting Position
Preferably vertical, with the cable gland on top.

Materials: P31P & P32P
- Magnet Core .....Steel
- Solenoid Valve Poppet ..... FPM
- Solenoid Valve Housing ..... Techno Polymer
- Regulator Body (P31P & P32P versions) ..... Aluminium
- Regulator Top Housing .....Nylon
- Valve Head .....Brass & NBR
- Remaining Seals ..... NBR

Advanced Functionality

Pilot valve protection
When the required output pressure can not be achieved because of a lack of input pressure the unit will open fully and will display NoP. Approximately every 10 seconds the unit will retry. The output pressure will then be approximately equal to the inlet pressure. As soon as the input pressure is back on the required level, the normal control function follows.

Safety exhaust
Should the **control signal** fall below 0.1 volts the valve will automatically dump downstream system pressure .

Input protection
The unit has built-in protection against failure and burnout resulting from incorrect input value, typically:

The 24VDC supply is incorrectly connected to the setpoint input, the display will show ‘OL’, as an overload indication. The unit will need to be rewired and when correctly connected will operate normally.

The overload indicator ‘OL’ will also appear should the wrong input value be applied or the wrong input value be programmed: 4 - 20m instead of 0 - 10V. To correct this a different set point value should be input or the unit reprogrammed to correct the set point value acceptance. (via parameter 4).

Response time	P31P	P32P
2 to 4 bar	25 msecs	35 msecs
1 to 6 bar	55 msecs	135 msecs
4 to 2 bar	70 msecs	85 msecs
6 to 1 bar	80 msecs	225 msecs

To fill volume of:
100cm³ - P31P
330cm³ - P32P
connected to the outlet of the regulator.

Settings
The regulator is pre-set at the factory. If required, adjustments can be made.

Flow Charts

P31P Regulator 1/4” Ports

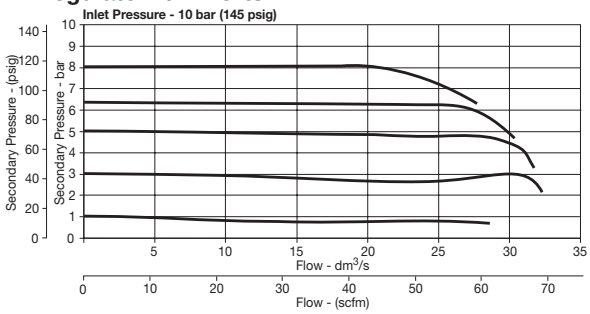

P32P Regulator 1/2” Ports

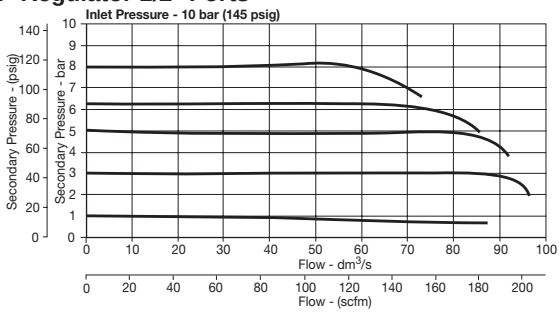

Parker Hannifin Corporation
Pneumatic Division
Richland, Michigan
www.parker.com/pneumatics

How to Change Parameters

Pressing the Accept key “acc” for more than 3 seconds, will activate parameter change mode. The user can then select the parameters by pressing up or down key. (display will show Pxx). When parameter number is correct, pressing accept again will enter parameter number.(display will show parameter value).

Pressing the up or down key will change the parameter itself. (display will flash indicating parameter editing mode). Pressing the accept key will accept the new parameter value. (all digits will flash whilst being accepted).

After releasing all keys , the next parameter number will be presented on the display. (you may step to the next parameter). When no key is pressed, after 3 seconds the display will show the actual output pressure.

When the unit is initially powered up allow approximately 10 seconds for the unit to “boot-up” before changing parameter settings.

Only parameter numbers 0, 4, 6, 8, 9, 14, 18, 19, 20, 12, 13 and 21 are accessible to edit. All other parameters are fixed.

Manual mode:

When keys DOWN and UP are pressed during startup, (connecting to the 24V power supply) manual mode is activated. This means that the user is able to in/decrease the output pressure of the regulator, by pressing the UP or DOWN key. During this action the display will blink, indicating that the manual mode is activated. After powering up again, the unit will revert back to normal mode.

Back to Factory Setting

After start up. (Power is on)
Entering this value in parameter 0 will store the calibrated factory data into the working parameters.
(Default calibration data is used)

Parameter Number 0 – Reset Back to Factory Settings

Step	1	2	3	4	5	
Press	acc 3-6 seconds	▼ or ▲	acc	▼ or ▲	acc	
Until Display Reads	Pxx	P00	000. Flashing Decimal	003. Flashing Decimal	003 Flashing	P01
Description	Accesses changeable parameters.	Accesses parameter no. 0.	Displays current parameter value.	Edits parameter. 3 = standard factory settings. If other than 3, use Up or Down Arrow and accept 3	Accepts and saves new parameter setting.	Sequences to next parameter.

Set Control Signal

The unit is factory set for 0-10 V control signal. If 4-20 mA control signal is required, change parameter 4.

Parameter Number 4 – Set Control Signal in Volts or Milliamps

Step	1	2	3	4	5	
Press	acc 3-6 seconds	▼ or ▲	acc	▼ or ▲	acc	
Until Display Reads	Pxx	P04	001. Flashing Decimal	000. Flashing Decimal	000 Flashing	P05
Description	Accesses changeable parameters.	Accesses parameter no. 4.	Displays current parameter value. 1 = V 0 = mA	Edits parameter.	Accepts and saves new parameter setting.	Sequences to next parameter.

Parker Hannifin Corporation
Pneumatic Division
Richland, Michigan
www.parker.com/pneumatics

Set Output Signal

Parameter 6 is used to set the type of output signal to your PLC.
This parameter is used as follows:

Output Signal option “0” = Digital Output – PNP
- Factory set at “0” Non Adjustable

Output Signal option “P” = Digital PNP or Analog 1-10V
- Factory set at “1” for Analog Signal
- Convert to Digital PNP by changing parameter to “0” setting

Output Signal option “N” = Digital NPN or Analog 1-10V
- Factory set at “1” Analog Signal
- Convert to Digital NPN by changing parameter to “0”

Output Signal option “M” = Analog 4-20 mA
- Factory set at “2” Non Adjustable

Parameter Number 6 – Set Output Signal

Step	1	2	3	4	5	
Press	acc 3-6 seconds	▼ or ▲	acc	▼ or ▲	acc	
Until Display Reads	Pxx	P06	001.	###. Flashing Decimal (Value 0, 1 or 2)	###. Flashing	P07
Description	Accesses changeable parameters.	Accesses parameter no. 6.	Displays current parameter value. 1 = m factory default for P3H with analog options	Edits parameter. 0 = digital (NPN or PNP) 1 = analog 0..10V 2 = analog 4..20 mA	Accepts and saves new parameter setting.	Sequences to next parameter.

Adjust Span Analog Output Signal

Set value is a % of Full Analog range. As an example for a 0-10V output signal, the original factory setting of 100% will give you an adjustment of 0-10V. If you reset Parameter 8 to 50%, the new output range would be 0-5V or 50% of the full range.

In the event that the output signal is to low, in a certain application, you can adjust it by increasing Parameter 8 to a maximum value of 130% of scale.

Note that all values are nominal and that an actual measurement may be required to ensure signal strength.

Parameter Number 8 – Adjust Span Analog Output Signal

Step	1	2	3	4	5	
Press	acc 3-6 seconds	▼ or ▲	acc	▼ or ▲	acc	
Until Display Reads	Pxx	P08	100. Flashing Decimal (For 2 bar versions value = 92)	###. Flashing Decimal (Value between 0 and 130)	###. Flashing	P09
Description	Accesses changeable parameters.	Accesses parameter no. 8.	Displays current parameter value.	Edits parameter.	Accepts and saves new parameter setting and implements the new analog signal span.	Sequences to next parameter.

Parker Hannifin Corporation
Pneumatic Division
Richland, Michigan
www.parker.com/pneumatics

Adjust Digital Display

If necessary, adjustments can be made to the digital display when using an external pressure sensor.

Parameter Number 9 – Adjust Digital Display Value (Pressure Calibration)

Step	1	2	3	4	5	
Press	acc 3-6 seconds	▼ or ▲	acc	▼ or ▲	acc	
Until Display Reads	Pxx	P09	###. Flashing Decimal	###. Flashing Decimal	### Flashing	P 10
Description	Accesses changeable parameters.	Accesses parameter no. 9.	Displays current digital display	Use up or down arrows and accept to adjust the display value if using an external pressure sensor.	Accepts and saves new parameter setting.	Sequences to next parameter.

F

P31P / P32P

PAR15

Set Pressure Scale

Units with NPT port threads are supplied with a factory set psig pressure scale. Use parameter 14 to change scale to bar.

Parameter Number 14 – Set Pressure Scale in psig or bar

Step	1	2	3	4	5	
Press	acc 3-6 seconds	▼ or ▲	acc	▼ or ▲	acc	
Until Display Reads	Pxx	P 14	001. Flashing Decimal	000. Flashing Decimal	000 Flashing	P 15
Description	Accesses changeable parameters.	Accesses parameter no. 14.	Displays current parameter value. 1 = psig 0 = bar 2 = MPA	Edits parameter.	Accepts and saves new parameter setting.	Sequences to next parameter.

Parker Hannifin Corporation
Pneumatic Division
Richland, Michigan
www.parker.com/pneumatics

Preset Minimum Pressure

If there is a need for a pre-set Minimum pressure, use parameter 18. (Note: preset pressure is affected by % P19.)

Parameter Number 18 – Set Minimum Preset Pressure

Step	1	2	3	4	5	
Press	acc 3-6 seconds	▼ or ▲	acc	▼ or ▲	acc	
Until Display Reads	Pxx	P 18	000.	###. Flashing Decimal (value between 0 and 200)	### Flashing	P 19
Description	Accesses changeable parameters.	Accesses parameter no. 18.	Displays current parameter value. Incremental value is: 2 bar unit: x 2 mbar x % P19 10 bar unit: x 10 mbar x % P19	Edits parameter.	Accepts and saves new parameter setting.	Sequences to next parameter.

Set Pressure Correction

Pressure correction allows the user to set a Maximum pressure as a percentage of secondary pressure F.S.

Example: If F.S. is 10 bar, set parameter 19 to 50 for Maximum preset pressure of 5 bar.

Pressure correction also affects the Minimum preset pressure in parameter 18.

Example: If F.S. is 10 bar and parameter 18 is set to a value of 100 (1 bar), and parameter 19 is set to 50%, then the actual Minimum preset pressure seen is 0.5 bar.

Parameter Number 19 – Set Maximum Preset Pressure

Step	1	2	3	4	5	
Press	acc 3-6 seconds	▼ or ▲	acc	▼ or ▲	acc	
Until Display Reads	Pxx	P 19	100.	###. Flashing Decimal (value between 0 and 100)	### Flashing	P20
Description	Accesses changeable parameters.	Accesses parameter no. 19.	Displays current parameter value. Incremental value is: % of F.S.	Edits parameter.	Accepts and saves new parameter setting.	Sequences to next parameter.

Parker Hannifin Corporation
Pneumatic Division
Richland, Michigan
www.parker.com/pneumatics

Behavior Control

The regulation speed of the pressure regulator can be modified by means of one parameter. (P 20)

The value in this parameter has a range from 0-5. A higher value indicates slower regulation speed, but will be more stable.

Parameter Number 20 – Set Behavior Control

Step	1	2	3	4	5	
Press	acc 3-6 seconds	▼ or ▲	acc	▼ or ▲	acc	
Until Display Reads	Pxx	P20	003.	###. Flashing Decimal (value between 0 and 5)	### Flashing	P21
Description	Accesses changeable parameters.	Accesses parameter no. 20.	Displays current parameter value.	Edits parameter 0 = custom set* 1 = fastest (narrow proportional band) 2 = fast 3 = normal 4 = slow 5 = slowest (proportional band is broad)	Accepts and saves new parameter setting.	Sequences to next parameter.

* When the value 0 is entered, you are able to create your own custom settings true parameters 12, 13 and 21.

F

P31P / P32P

PAR15

Fine Settings

Set Proportional Band

Proportional band is used for setting the reaction sensitivity of the regulator. The displayed value is X 10 mbar and has a range between 50 (0.5 bar) and 250 (2.5 bar).

Parameter Number 12 – Set Proportional Band (P20 Must be Set to 0)

Step	1	2	3	4	5	
Press	acc 3-6 seconds	▼ or ▲	acc	▼ or ▲	acc	
Until Display Reads	Pxx	P12	100. Flashing Decimal	###. Flashing Decimal (value between 50 and 250)	### Flashing	P13
Description	Accesses changeable parameters.	Accesses parameter no. 12.	Displays current parameter value. Incremental value is: x 10 mbar	Edits parameter.	Accepts and saves new parameter setting.	Sequences to next parameter.

Parker Hannifin Corporation
Pneumatic Division
Richland, Michigan
www.parker.com/pneumatics

Set Deadband

Deadband is the Minimum limit of accuracy at which the regulator is set for normal operation. The displayed value is X 10 mbar and has a range between 4 (40 mbar) and 40 (400 mbar).

Parameter Number 13 – Set Deadband (P20 Must be Set to 0)

Step	1	2	3	4	5	
Press	acc 3-6 seconds	▼ or ▲	acc	▼ or ▲	acc	
Until Display Reads	Pxx	P 13	0 15.	# # #. Flashing Decimal (value between 4 and 40)	# # # Flashing	P 14
Description	Accesses changeable parameters.	Accesses parameter no. 13.	Displays current parameter value. Incremental value is x 10 mbar	Edits parameter.	Accepts and saves new parameter setting.	Sequences to next parameter.

Proportional Effect

Parameter Number 21 – Set Proportional Effect (P20 Must be Set to 0)

Step	1	2	3	4	5	
Press	acc 3-6 seconds	▼ or ▲	acc	▼ or ▲	acc	
Until Display Reads	Pxx	P21	0 10.	# # #. Flashing Decimal (value between 5 and 100)	# # # Flashing	P22
Description	Accesses changeable parameters.	Accesses parameter no. 21.	Displays current parameter value.	Edits parameter. 5 = fastest regulation 100 = slowest regulation.	Accepts and saves new parameter setting.	Sequences to next parameter.

Parameter Number 39 – Displays Current Software Version

Step	1	2	3	
Press	acc 3-6 seconds	▼ or ▲	acc	
Until Display Reads	Pxx	P39	# # # Flashing Decimal	
Description	Accesses changeable parameters.	Accesses parameter no. 39.	Displays current parameter value. XXX = current software version	

Parker Hannifin Corporation
Pneumatic Division
Richland, Michigan
www.parker.com/pneumatics

P31P Bottom Exhaust Version

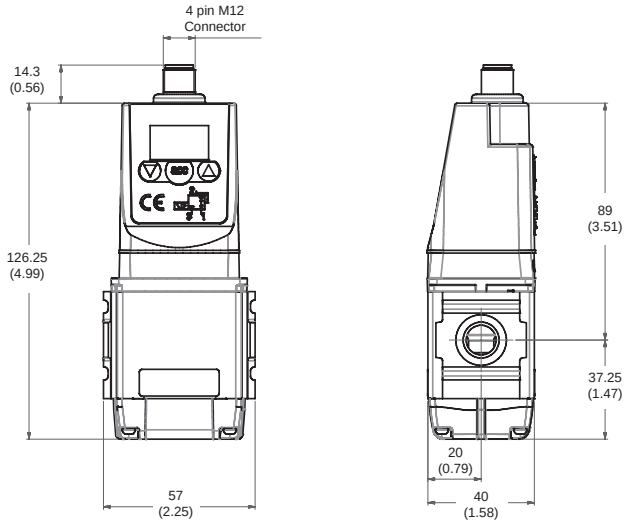

L-Bracket

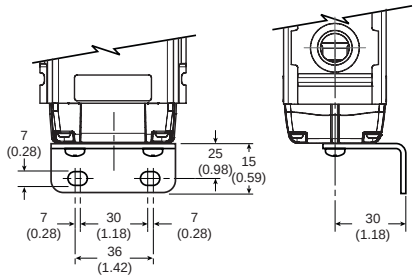

Foot Bracket

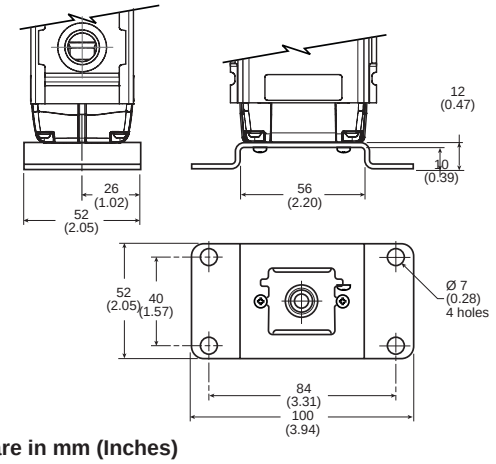

P32P Bottom Exhaust Version

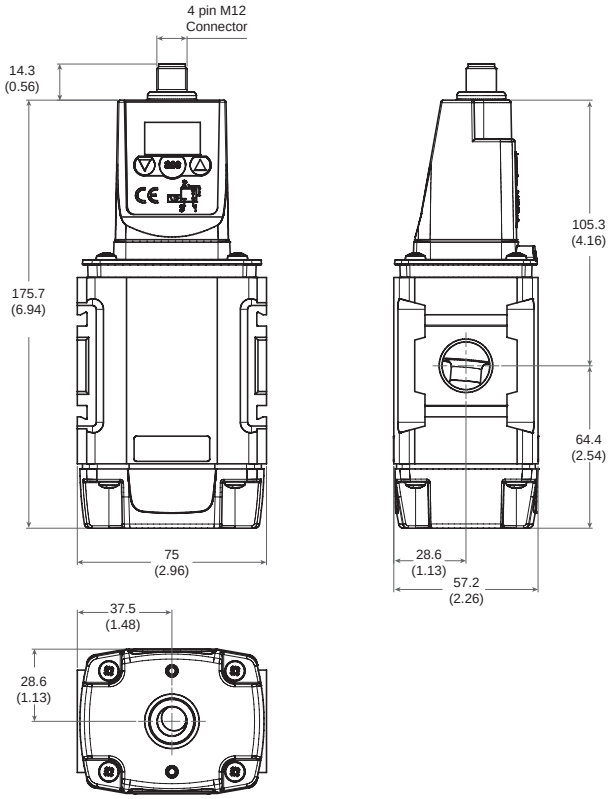

L-Bracket

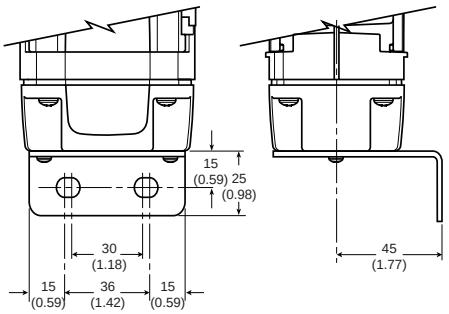

Foot Bracket

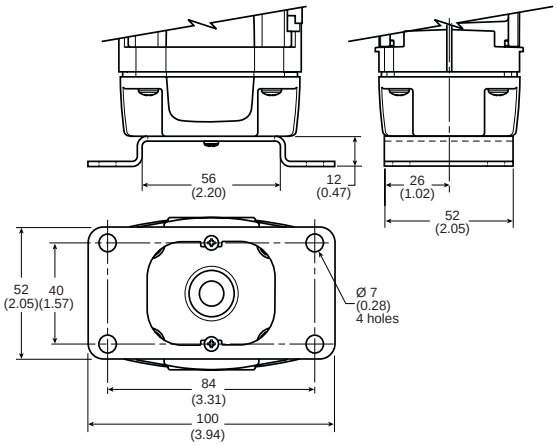

Dimensions are in mm (Inches)

Parker Hannifin Corporation
Pneumatic Division
Richland, Michigan
www.parker.com/pneumatics

Problem	Possible Reason	Solution
Display will not light up	No 24 volts power supply	Check if the wiring is connected according to the schematic wiring diagram
Unit will not, or not correctly respond to given setpoint	Wrong current applied (I.e. Volt instead of mA or mA instead of Volt	Change setpoint current or re configure the setpoint current through the software by changing parameter 4
		Check wiring if the setpoint signal lead is connected to the right pin within the male M12 connector (should be pin 2)
	Setpoint signal is not stable enough	Stabilize setpoint signal input
Display shows NoP.	Unit detects that required output pressure is higher than the supplied pressure	Adjust the inlet pressure to a higher value, preferably 0,5 bar higher than requested output pressure
		Give lower setpoint value which corresponds to a output pressure lower than the inlet pressure
	No inlet pressure at all	Connect port 1 to the supply pressure
Unit behavior is not considered normal	Faulty settings made in the parameters	Reset the unit to factory settings by using the green key function under parameter 0
Desired pressure can not be reached	Setpoint value to low	Increase setpoint value
	Pre-set pressure limit has been changed to a lower max. outlet pressure	Change max. outlet pressure back to required pressure by changing parameter 19
	Supply pressure is to low	Increase supply pressure
Secondary side stays pressurized	Setpoint value is higher than 0,1 Volt	Lower your setpoint value, preferably to 0 Volts
	Pre-set pressure has been enabled to a certain pressure	Reset parameter 18 to 0
Display shows unrealistic value	Display maybe configured in the wrong value (bar instead of psi)	Check through parameter 14, if the display value is set on either psi or bar, if necessary change it to the required setting
Unit response time too slow or too quick	Volume behind the unit is either too big or too small	Adjust the regulating speed of the unit through parameter 20
Unit gives too much overshoot	Relation between volume and response me is out of balance	Adjust response time to a higher value through parameter 20, to achieve more accurate behavior
Unit is adjusting/regulating constantly	Air leakage in the system behind the unit	Resolve leakage
	Constant changing volume behind the unit	Unit needs to regulate to keep required pressure at the same level
		Try to minimize the volume changes
	“Deadband “area is set too small	Enlarge deadband setting through parameter 13 in the software (parameter 20 has to be set to 0 before changing parameter 13)
Can not enter software through touchpad	Unit is currently working/processing	Make sure that the unit is in steady state while activating the software
	Activating time is too short	Hold the accept button for at least 3 seconds
Display indicates ‘OL’	Wiring not according to diagram (24 volt connected on the setpoint connection pin)	Rewire so that on the setpoint connection pin will be either 0-10v or 4-20mA
	Wrong setpoint value given in relation to programmed setpoint value acceptance	Change over setpoint value to either V or mA or Reprogram the unit to the correct setpoint value via parameter 4
Any other problem	Please consult factory	

Parker Hannifin Corporation
Pneumatic Division
Richland, Michigan
www.parker.com/pneumatics

Glossary

Hysteresis – The mechanical limits of accuracy of the unit. The regulator cannot be adjusted within the inherent mechanical limits of the design.

Dead Band – The minimum limit of accuracy at which the regulator is set for normal operation. This band must be equal to, or exceed, the inherent design limits of the regulator or the hysteresis band.

Proportional Band – The band used for setting reaction sensitivity of the regulator. The regulator senses the excursion from the set pressure and adjusts response in relation to the degree of excursion beyond the dead band. This band must exceed the dead band of the unit.

Proportional Effect – The speed at which the unit approaches P2 (secondary pressure).

Sensitivity – The smallest change in the control signal, or feedback signal, to cause a change in regulated output pressure.

Repeatability – a measurement of how consistently the unit can reproduce an output pressure in relation to a specific set pressure.

Linearity – A measure of how closely the relationship of output pressure vs. the control signal deviates from a straight line function.

PNP Output – Referred to as a “Sourcing” open collector transistor output where the voltage sources towards 24VDC when activated.

NPN Output – Referred to as a “Sinking” open collector transistor output. The output sinks towards 0VDC when activated.

Parker Hannifin Corporation
Pneumatic Division
Richland, Michigan
www.parker.com/pneumatics

PAR-15 Series

Programmable Air Regulating Valve

Digital Binary Regulator

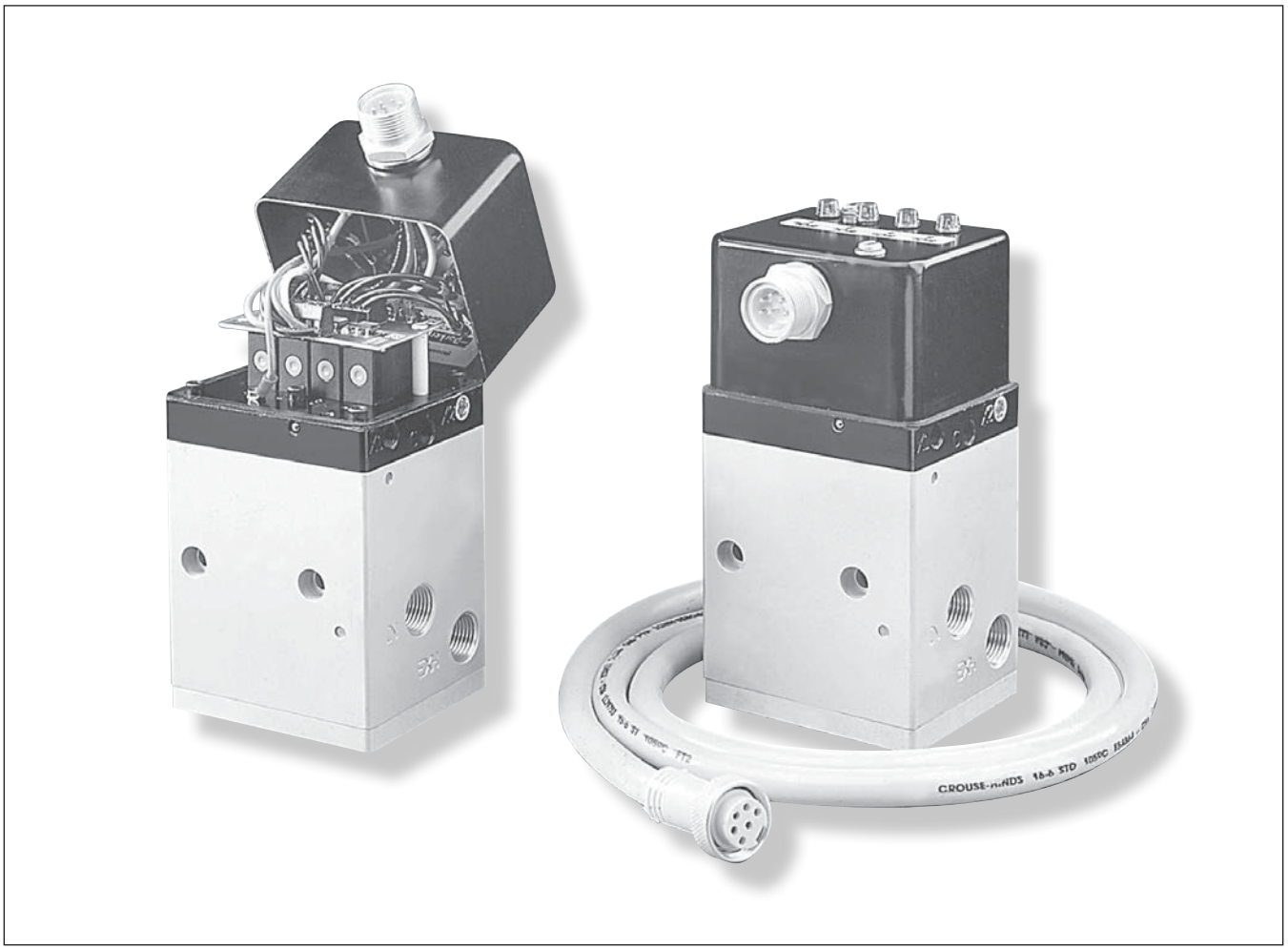

PAR™-15 Series Basic Features F20
Model Number Index F21
Solenoid Operated Valves F22
Truth Table & Dimensions..... F23
Narrow Band Control and Cascading..... F24
Cascading Truth Table F25
Technical Information.....F26-F27
Flow Characteristics & Response Time F28

Parker Hannifin Corporation
Pneumatic Division
Richland, Michigan
www.parker.com/pneumatics

Features

PAR™-15 is a unique 3-Way, programmable, air regulating valve that functions as a precise, high-flow, multi-purpose regulator.

Signals from a computer, programmable controllers or from simple electrical switches, fed to the valve's four solenoids, control the division of a single inlet pressure into any one of fifteen equally spaced output pressures.

The valve's response is instant and repeatable, reducing the need for expensive feedback controls.

It goes far beyond the capabilities of conventional controls by providing a limitless range of application possibilities including cylinder pressure/stroke control, clamping, retracting, approach, flow, and impact.

PAR™-15 eliminates shock absorbers, increases tool life, saves air, and reduces workpiece damage.

- Full flow capacity for direct air device operation.
- Quick, full flow exhaust.
- Instantly repeatable response.
- Air saving design, close crossover, non-constant bleed.
- Wide range of discrete output pressures.
- Normally closed or normally open operators.
- Compatible with computers and programmable controllers with digital solid state relay outputs.
- Meets NEMA 4 standard (6-Pin option only).

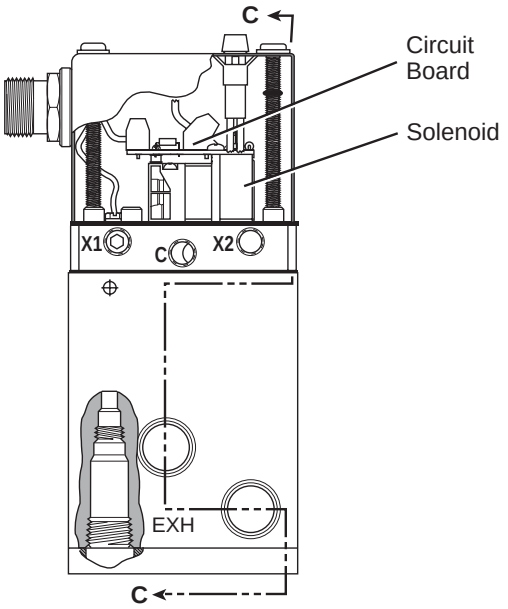

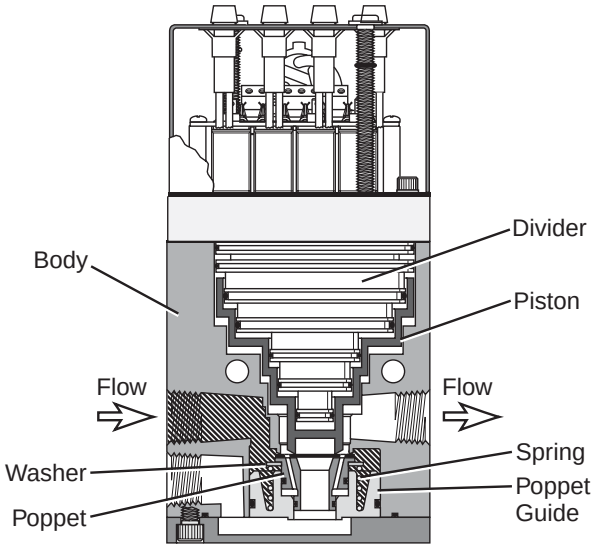

Section C-C

Pressure **Exhaust**

Electropneumatic System

A conventional system is usually composed by several electronic and pneumatic components as shown on the schematic. The cylinder which is moving a load is operated with a pilot valve which receives the instructions from an electropneumatic transducer. The transducer converts electronic signals to pneumatic signals. These electronic signals are usually of an analog type, but controllers/computer microprocessors send digital signals as outputs, therefore, a digital to analog signal converter is required.

The simplified schematic with the PAR™-15 is reduced to fewer components since the PAR™-15 takes the place of the digital to analog converter, the electropneumatic transducer, and the pilot valve. The benefits being fewer components, and less maintenance and downtime.

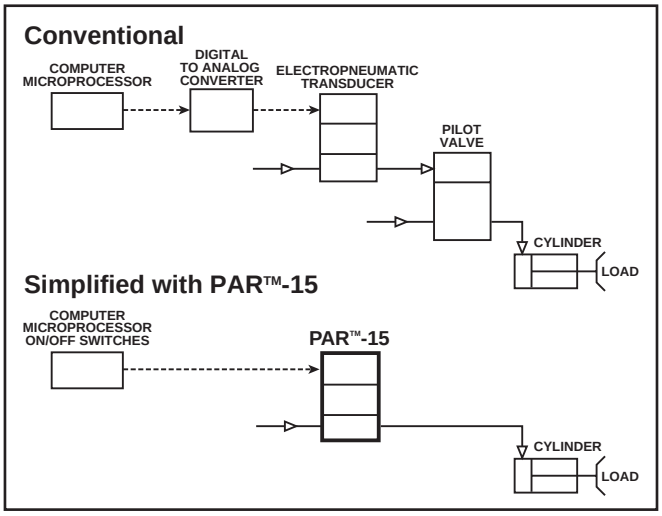

Parker Hannifin Corporation
Pneumatic Division
Richland, Michigan
www.parker.com/pneumatics

Basic Series	Actuation	Port Size / Thread Type	Enclosure / Connector / Quadrant	Solenoid Type / Pilot Source	Voltage	Label / Temp Option	Engineering Level
W21	**5**	**4**	**2**	**1**	**83**	**L**	**B**

Basic Series	
W21	PAR™-15 Version 2.0

Port Size / Thread Type	
4	**1/2" NPT**

Voltage	
72	24V/60Hz
75	12VDC
79	**24VDC**
83	**120/110V 60/50Hz**

Engineering Level	
B	**Current**

Actuation	
5	Solenoid Operated

Solenoid Type / Pilot Source	
1	**Normally Closed / Internal Pilot**
3	Normally Closed / External Pilot
5	Normally Open / Internal Pilot
7	Normally Open / External Pilot

Label / Temp Option	
Blank	**Standard Temperature**

Enclosure / Connector Quadrant	
0	No Enclosure
1	Metal Enclosure with 7/8" Conduit Opening at Quadrant 2
2	**NEMA 4 Enclosure with 6-Pin Mini Connector Quadrant 2, Cord Included**
3	Metal Enclosure with 7/8" Conduit Opening at Quadrant 4
4	NEMA 4 Enclosure with 6-Pin Mini Connector Quadrant 4, Cord Included
5	NEMA 4 Enclosure with 6-Pin Mini Connector Quadrant 2, No Cord
6	NEMA 4 Enclosure with 6-Pin Mini Connector Quadrant 4, No Cord
B*	Lighted Enclosure with 6-Pin Mini Connector at Quadrant 2, Cord Included
C*	Lighted Enclosure with 6-Pin Mini Connector at Quadrant 2, No Cord
E	NEMA 4 Enclosure with 6-Pin Micro Connector at Quadrant 2, Cord Included
F	NEMA 4 Enclosure with 6-Pin Micro Connector at Quadrant 4, Cord Included
G	NEMA 4 Enclosure with 6-Pin Micro Connector at Quadrant 2, No Cord
H	NEMA 4 Enclosure with 6-Pin Micro Connector at Quadrant 4, No Cord
K*	Lighted Enclosure with 6-Pin Micro Connector at Quadrant 2, Cord Included
L*	Lighted Enclosure with 6-Pin Micro Connector at Quadrant 2, No Cord
M*	Lighted Enclosure with 6-Pin Mini Connector at Quadrant 4, Cord Included
N*	Lighted Enclosure with 6-Pin Mini Connector at Quadrant 4, No Cord
P*	Lighted Enclosure with 6-Pin Micro Connector at Quadrant 4, Cord Included
Q*	Lighted Enclosure with 6-Pin Micro Connector at Quadrant 4, No Cord

Theoretically, Quadrant 1 is defined as the 6-Pin Connector on the same face with the inlet port. Looking from the top down and rotating the enclosure clockwise 90° you get Quadrant 2 or 270° for Quadrant 4.

* Available in 24VDC and 120VAC Only.
Not NEMA 4 rated.

Parker Hannifin Corporation
Pneumatic Division
Richland, Michigan
www.parker.com/pneumatics

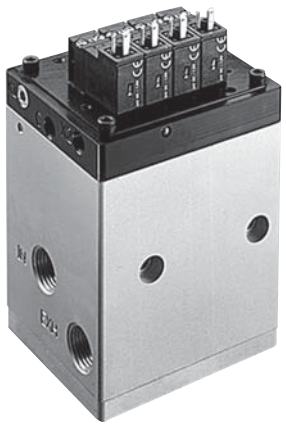

No Enclosure

NEMA 4 Enclosure – 6-Pin Connector

Application

Pneumatic systems operating under multiple pressures, and requiring almost instantaneous pressure changes are good application cases for the PAR™-15. Usually the more pressures needed for a particular operation, the easier it is to justify the valve, since it will take the place of several pneumatic regulators and selector valves.

Among the most common applications are brakes and clutches, painting, printing feeds and tension, robotics, and spot welding.

Other Applications:

- Air Chucks
- Air Cylinder Control
- Air Winches
- Blow Molding Control
- Contact Force Control
- Conveyor Control
- Die Cushioning
- Dynamic Braking
- Fuel Control
- Hopper Control
- Robot Gripper Control
- Valve Positioning
- Variable Clamping
- Variable Pressure Processing
- Torque Control
- Wire Tensioning

Operation

Four solenoids are controlled by on/off signals that selectively divide any input pressure into any one of 15 equally spaced pressures plus zero. See the truth table.

Full flow exhaust permits instant reduction to any lower selected pressure or zero. High relief capacity quickly vents downstream overpressure. The output pressure will begin to change within 20 milliseconds after a change in the electrical input to one or more of the solenoids. However, the time which elapses until the output pressure reaches the new level will depend upon the volume of air, the size of the connection from the PAR™-15 valve and the magnitude of the pressure change.

A small regulator may be used to feed the external pilot port X1 on units with normally closed solenoid operators or X2 on units with normally open solenoid operators. The PAR™-15 valve will then divide this pressure independent of mainline supply pressure so long as the pilot regulator is set to a pressure below the mainline supply pressure. A regulated external supply will eliminate the effects of fluctuating mainline pressures. (NOTE: A regulator placed upstream of the inlet also eliminates the effects of fluctuating pressures).

The PAR™-15 is available with two types of output pressure regulation: increasing output and decreasing output. In the increasing output pressure regulation type, normally closed solenoid operators are used to divide the input pressure into 15 equal steps, ranging from 0 PSIG (all solenoid operators de-energized) to full line pressure (all solenoid operators energized). With the decreasing output pressure regulation type, normally open solenoid operators are used to divide the input pressure into 15 equal steps, but starting with full line pressure (all solenoid operators de-energized) and ending with 0 PSIG (all solenoid operators energized).

Model Selection Information

Solenoid Operated – Normally Closed – Internal Pilot*			Voltage/Cycle	Port Size	
No Enclosure	NEMA 4 Enclosure - 6-Pin Connector				
	Quadrant 2 †	Quadrant 4 †		Body	Pilot
W21540172	W21542172	W21544172	24V/60Hz	1/2"	1/8"
W21540175	W21542175	W21544175	12VDC	1/2"	1/8"
W21540179	W21542179	W21544179	24VDC	1/2"	1/8"
W21540183	W21542183	W21544183	110/120V / 50/60Hz	1/2"	1/8"

* Normally open and external pilot options also available.

† Theoretically Quadrant 1 is defined as the 6-Pin connector on the same face with the inlet port. Looking from the top down and rotating the enclosure clockwise 90° you get Quadrant 2 or 270° for Quadrant 4.

Parker Hannifin Corporation
Pneumatic Division
Richland, Michigan
www.parker.com/pneumatics

Truth Table

Normally Closed Valves / Solenoids	Normally Open Valves / Solenoids			
Binary Input* 8 4 2 1	**Binary Input* 8 4 2 1**	**Proportion of Inlet Pressure**	**PSIG Output@ 75 PSIG Inlet††**	**PSIG Output@ 90 PSIG Inlet**
Pin Number † 5 3 2 1	**Pin Number † 5 3 2 1**			
0 0 0 0	1 1 1 1	0	0	0
0 0 0 1	1 1 1 0	1/15	5	6
0 0 1 0	1 1 0 1	2/15	10	12
0 0 1 1	1 1 0 0	3/15	15	18
0 1 0 0	1 0 1 1	4/15	20	24
0 1 0 1	1 0 1 0	5/15	25	30
0 1 1 0	1 0 0 1	6/15	30	36
0 1 1 1	1 0 0 0	7/15	35	42
1 0 0 0	0 1 1 1	8/15	40	48
1 0 0 1	0 1 1 0	9/15	45	54
1 0 1 0	0 1 0 1	10/15	50	60
1 0 1 1	0 1 0 0	11/15	55	66
1 1 0 0	0 0 1 1	12/15	60	72
1 1 0 1	0 0 1 0	13/15	65	78
1 1 1 0	0 0 0 1	14/15	70	84
1 1 1 1	0 0 0 0	15/15	75	90

Table above illustrates available output pressures for inlet pressures of 75 PSIG and 90 PSIG. Inlet pressure may be any value between 15 and 150 PSIG. Output pressure increment will be 1/15 of inlet pressure.

* 0 = Voltage "OFF"
1 = Voltage "ON"

† Available only on units with 6-Pin connector.

†† Shaded output pressures shown are theoretical and are below the minimum operating range of the valve and should not be used. Please refer to the Engineering Specifications for minimum output.

Dimensions

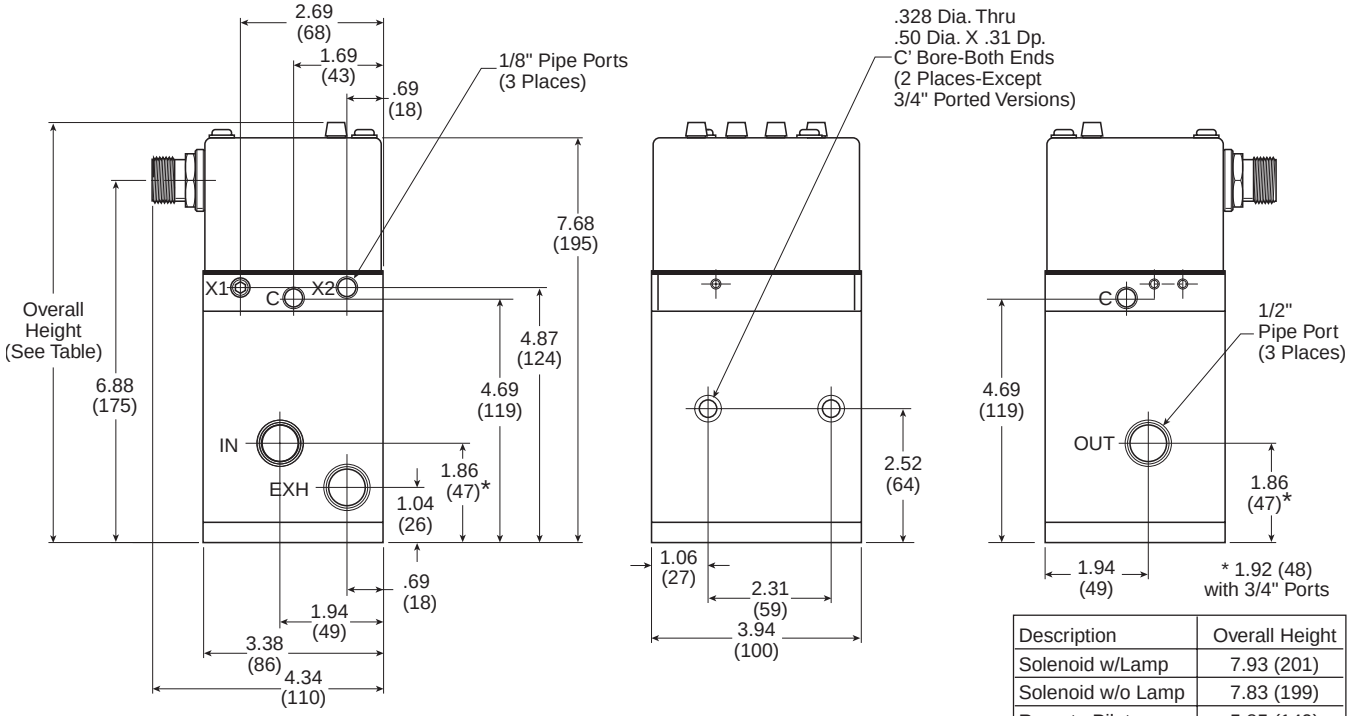

Description	Overall Height
Solenoid w/Lamp	7.93 (201)
Solenoid w/o Lamp	7.83 (199)
Remote Pilot	5.85 (149)

Parker Hannifin Corporation
Pneumatic Division
Richland, Michigan
www.parker.com/pneumatics

Narrow Band Control

The PAR™-15 can also be used to provide a narrower band of output pressures with the lowest selected pressure greater than zero.

EXAMPLE:

Assume valve with normally closed solenoids. Customer desires to divide a range from 25 PSIG to 100 PSIG into 15 increments of 5 PSIG each. This is done by applying 100 PSIG to the external pilot supply port X1 and 25 PSIG to the pilot exhaust port X2.

Two 1/8 inch relieving regulators are required. The addition of one 3-Way normally closed solenoid operated valve allows the additional selection of 0 PSIG. These are connected as shown in the diagram. The relieving regulators set the upper and lower band limits. With a normally closed PAR™-15 valve, zero output pressure may be selected by simultaneously de-energizing the 3-Way valve and the PAR™-15 valve solenoids. With a normally open PAR™-15 valve, zero output pressure may be selected by simultaneously de-energizing the 3-Way valve and energizing the PAR™-15 valve solenoids.

Narrow Band Control Diagram

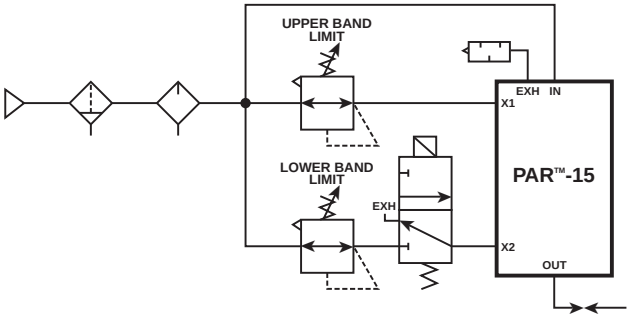

Note: For valves with normally open solenoids, reverse the X1 and X2 connections.

Cascading

Two PAR™-15's can also be used in conjunction to provide 240 steps (versus 15 steps from one valve), therefore more output pressures. See diagram.

Connect the outlet port marked OUT of the valve upstream to the 1/8" port marked C of the valve downstream. A port/pipe reducer(s) must be used to accomplish this task. If desired, a pressure gauge can be installed between these two points. A gauge isolator should be used to protect the gauge from pulsating pressures.

Connect the outlet port marked OUT of the valve downstream to the supply side of the system requiring multiple pressures. If desired, a pressure gauge can be installed downstream of the outlet port. A gauge isolator should be used to protect the gauge from pulsating pressures.

DO NOT PLUG THE 1/8" PORTS MARKED C AND X2 ON THE VALVE UPSTREAM AND X2 ON THE VALVE DOWNSTREAM.

Operation of the valves is the same as mentioned previously under the Operation section. See Cascading Truth Table for the proper input signal to each solenoid, and the resulting proportion of inlet pressure for an output pressure.

A formula can be used to calculate the output pressure of the valve downstream.

$$\text{OUTPUT PRESSURE (PSIG)} = \frac{\text{LINE PRESSURE (PSIG)}}{15} \times \left(\frac{\text{BINARY INPUT UPSTREAM VALVE}}{16} + \text{BINARY INPUT DOWNSTREAM VALVE} \right)$$

Where:

LINE PRESSURE is the supply pressure to both valves and it must be equal.

BINARY INPUT UPSTREAM VALVE is the binary number, a number from 0 to 15 depending on which solenoids are energized (normally closed solenoids) or de-energized (normally open solenoids) on the valve upstream.

BINARY INPUT DOWNSTREAM VALVE is the binary number, a number from 0 to 15 depending on which solenoids are energized (normally closed solenoids) or de-energized (normally open solenoids) on the valve downstream.

EXAMPLE:

Assume the line pressure is 120 PSIG, the valve upstream has inputs 1 & 2 energized, and the valve downstream has inputs 1 & 8 energized. Also, assume normally closed solenoids. What is the output pressure of the valve downstream?

SOLUTION:

BINARY INPUT VALVE UPSTREAM = 1 + 2 = 3
BINARY INPUT VALVE DOWNSTREAM = 1 + 8 = 9

$$\text{OUTPUT PRESSURE} = \frac{120}{15} \times \left(\frac{3}{16} + 9 \right) = 8 \times 9.1875 = 73.5 \text{ PSIG}$$

Cascade Diagram

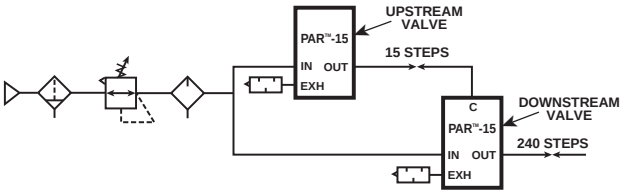

Parker Hannifin Corporation
Pneumatic Division
Richland, Michigan
www.parker.com/pneumatics

	Normally Closed Solenoids		Normally Open Solenoids					
	Down-Step Valve	Up-stream Valve	Down-stream Valve	Up-stream Valve	Down-stream Valve	Up-stream Valve		
	Binary Input* 8 4 2 1	8 4 2 1	8 4 2 1	8 4 2 1	Proportion	Proportion	PSIG Output @	PSIG Output @
	Pin Number † 5 3 2 1	5 3 2 1	5 3 2 1	5 3 2 1	of Inlet Pressure +	of Inlet Pressure	60 PSIG Inlet ††	120 PSIG Inlet ††
0	0 0 0 0	0 0 0 0	1 1 1 1	1 1 1 1	0	0	0.00	0.00
1	0 0 0 0	0 0 0 1	1 1 1 1	1 1 1 0	0	1/240	0.25	0.50
2	0 0 0 0	0 0 1 0	1 1 1 1	1 1 0 1	0	2/240	0.50	1.00
3	0 0 0 0	0 0 1 1	1 1 1 1	1 1 0 0	0	3/240	0.75	1.50
4	0 0 0 0	0 1 0 0	1 1 1 1	1 0 1 1	0	4/240	1.00	2.00
5	0 0 0 0	0 1 0 1	1 1 1 1	1 0 1 0	0	5/240	1.25	2.50
6	0 0 0 0	0 1 1 0	1 1 1 1	1 0 0 1	0	6/240	1.50	3.00
7	0 0 0 0	0 1 1 1	1 1 1 1	1 0 0 0	0	7/240	1.75	3.50
8	0 0 0 0	1 0 0 0	1 1 1 1	0 1 1 1	0	8/240	2.00	4.00
9	0 0 0 0	1 0 0 1	1 1 1 1	0 1 1 0	0	9/240	2.25	4.50
10	0 0 0 0	1 0 1 0	1 1 1 1	0 1 0 1	0	10/240	2.50	5.00
11	0 0 0 0	1 0 1 1	1 1 1 1	0 1 0 0	0	11/240	2.75	5.50
12	0 0 0 0	1 1 0 0	1 1 1 1	0 0 1 1	0	12/240	3.00	6.00
13	0 0 0 0	1 1 0 1	1 1 1 1	0 0 1 0	0	13/240	3.25	6.50
14	0 0 0 0	1 1 1 0	1 1 1 1	0 0 0 1	0	14/240	3.50	7.00
15	0 0 0 0	1 1 1 1	1 1 1 1	0 0 0 0	0	15/240	3.75	7.50
16	0 0 0 1	0 0 0 0	1 1 1 0	1 1 1 1	1/15	0	4.00	8.00
17	0 0 0 1	0 0 0 1	1 1 1 0	1 1 1 0	1/15	1/240	4.25	8.50
18	0 0 0 1	0 0 1 0	1 1 1 0	1 1 0 1	1/15	2/240	4.50	9.00
19	0 0 0 1	0 0 1 1	1 1 1 0	1 1 0 0	1/15	3/240	4.75	9.50
20	0 0 0 1	0 1 0 0	1 1 1 0	1 0 1 1	1/15	4/240	5.00	10.00
21	0 0 0 1	[illegible]	[illegible]	[illegible]	1/15	5/240	5.25	10.50
22	[illegible]	[illegible]	0 0 1 0	[illegible]	[illegible]	6/240	5.50	11.00
[illegible]	0 0 0 1	0 1 1 1	0 0 1 0	1 1 0 0	13/15	7/240	5.75	[illegible]
211	0 0 0 1	1 0 0 0	0 0 1 0	0 1 1 1	13/15	[illegible]	[illegible]	105.50
212	0 0 0 0	1 1 1 1	0 0 1 0	1 0 1 1	13/15	4/240	53.00	106.00
213	0 0 0 0	0 0 0 0	0 0 1 0	1 0 1 0	13/15	5/240	53.25	106.50
214	0 0 0 0	0 0 0 0	0 0 1 0	1 0 0 1	13/15	6/240	53.50	107.00
215	0 0 0 0	0 0 0 0	0 0 1 0	1 0 0 0	13/15	7/240	53.75	107.50
216	0 0 0 0	0 0 0 0	0 0 1 0	0 1 1 1	13/15	8/240	54.00	108.00
217	0 0 0 0	0 0 0 0	0 0 1 0	0 1 1 0	13/15	9/240	54.25	108.50
218	0 0 0 0	[illegible]	[illegible]	[illegible]	13/15	10/240	54.50	109.00
219	[illegible]	0 1 0 0	0 0 0 1	1 1 0 0	[illegible]	11/240	54.75	109.50
[illegible]	1 1 1 0	0 1 0 1	0 0 0 1	1 0 1 1	14/15	[illegible]	55.00	[illegible]
230	1 1 1 0	0 1 1 0	0 0 0 1	1 0 1 0	14/15	[illegible]	[illegible]	115.00
231	1 1 1 0	0 1 1 1	0 0 0 1	1 0 0 1	14/15	7/240	57.75	115.50
232	1 1 1 0	1 0 0 0	0 0 0 1	1 0 0 0	14/15	8/240	58.00	116.00
233	1 1 1 0	1 0 0 1	0 0 0 1	0 1 1 1	14/15	9/240	58.25	116.50
234	1 1 1 0	1 0 1 0	0 0 0 1	0 1 1 0	14/15	10/240	58.50	117.00
235	1 1 1 0	1 0 1 1	0 0 0 1	0 1 0 1	14/15	11/240	58.75	117.50
236	1 1 1 0	1 1 0 0	0 0 0 1	0 1 0 0	14/15	12/240	59.00	118.00
237	1 1 1 0	1 1 0 1	0 0 0 1	0 0 1 0	14/15	13/240	59.25	118.50
238	1 1 1 0	1 1 1 0	0 0 0 1	0 0 0 1	14/15	14/240	59.50	119.00
239	1 1 1 0	1 1 1 1	0 0 0 1	0 0 0 0	14/15	15/240	59.75	119.50
240	1 1 1 1	0 0 0 0	0 0 0 0	1 1 1 1	15/15	0	60.00	120.00

Table above illustrates available output pressures for inlet pressures of 75 PSIG and 90 PSIG. Inlet pressure may be any value between 15 and 150 PSIG. Output Pressure increment will be 1/15 of inlet pressure.

* 0 = Voltage "OFF"
1 = Voltage "ON"

† Available only on units with 6-Pin connector.

†† Shaded output pressures shown are theoretical and are below the minimum operating range of the valve and should not be used. Please refer to the Engineering Specifications for minimum output.

Note: Full table appears in instruction sheet enclosed with the product.

Parker Hannifin Corporation
Pneumatic Division
Richland, Michigan
www.parker.com/pneumatics

Flow Capacity

275 SCFM Inlet to Outlet

225 SCFM Outlet to Exhaust

Life Expectancy

Normal multi-million cycle life expectancy of these valves is based on the use of properly filtered air at room temperature.

Lubrication

Although the valve does not require lubrication for a normal service life, use of SAE 10 mineral base oil is recommended to extend component life. This should be supplied using a 1/2 inch full flow lubricator located upstream of the valve inlet port.

CAUTION:
DO NOT USE SYNTHETIC, RECONSTITUTED, OR OILS WITH AN ALCOHOL CONTENT.

Materials

Body, Bottom and Top Plates ..... Aluminum
Divider ..... Aluminum
Piston ..... Acetal
Poppet ..... Aluminum
Poppet Guide ..... Aluminum
Poppet Seal ..... Fluorocarbon
Seals ..... Nitrile
Spring ..... Stainless Steel

Output Response

20 milliseconds

Operating Pressure

Pressure Range	PSIG	kPa
Maximum Inlet	150	1035
Minimum Output	6	41

Shipping Weight

Without Enclosure 6.3 lbs. (2.9 kg.)

With 6-Pin Plug & Cord 8.0 lbs. (3.6 kg.)

Solenoid Enclosure

Meets NEMA-4 Standard (6-Pin Plug Optional Only)

Solenoid Kits & Electrical Data

Class F Solenoids				
Part Number	**Voltage / Cycles**	**Solenoid Type***	**Power Consumption (Watts)**	**Holding Current (AMPS)**
PS2982B45P	12VDC	NC	1.2W	0.1
PS2982B49P	24VDC	NC	1.2W	0.05
PS2982B53P	120V/60Hz	NC	1.6VA	0.013
PS2982B42P	24V/60Hz	NC	1.6VA	0.066
PS3202B42P	24V/60Hz	NO	2.4VA	0.1
PS3202B45P	12VDC	NO	1.8W	0.15
PS3202B49P	24VDC	NO	1.8W	0.075
PS3202B53P	120V/60Hz	NO	2.4VA	0.02

* NC = Normally Closed
NO = Normally Open

Temperature Range (Ambient)

32°F (0°C) to 140°F (60°C)

⚠ **Caution: If it is possible that the ambient temperature may fall below freezing, the media must be moisture free to prevent internal damage or unpredictable behavior.**

Voltage Range

+10% to -10% of rating

Wiring

Follow all national and local electrical codes.

Units with No Enclosure

Connect input and common signals to each one of the solenoids marked with the binary inputs 1, 2, 4 and 8, using the 3-Pin female connector kits shown in the catalog. Follow the installation instructions included with the 3-Pin female connector kits for the proper installation.

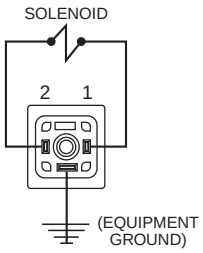

If you elect not to use the 3-Pin female connector kits, you may use three female spade connectors per solenoid and connect the wires as shown on the figure.

Units with Enclosure and Without 6-Pin Receptacle

Connect input and common signals to the terminal block on the circuit board labelled TB1. Connect each solenoid input (1, 2, 4, & 8) to the respective label on the circuit board. Connect each common to the input labelled C on the circuit board.

Parker Hannifin Corporation
Pneumatic Division
Richland, Michigan
www.parker.com/pneumatics

Units with Enclosure and 6-Pin Micro Receptacle

These units use the following brand names for 6-Pin micro connectors:

Brand Name	Receptacle	Connector w/ 6 Foot Cord
Brad Harrison	7R6006A19A120	706000D02F060
Joy	5000127-41	5000127-2

Connection is made as shown in the chart below.

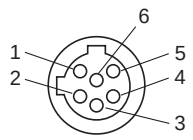

Micro

Pin	Wire Color	Function
1	Red-White	Input 1
2	Red	Input 2
3	Green	Equipment Ground
4	Red-Yellow	Common
5	Red-Black	Input 8
6	Red-Blue	Input 4

Units with Enclosure and 6-Pin Mini Connector

These units use either one of the following brand names for 6-Pin mini connectors:

Brand Name	Receptacle	Connector w/ 6 Foot Cord
Brad Harrison	42605	42602
Joy	X8987-2	X8987-4

Connection is made as shown in the chart below.

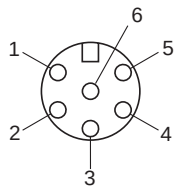

Mini

Pin	Wire Color	Function
1	Orange	Input 1
2	Blue	Input 2
3	Black	Input 4
4	White	Common
5	Red	Input 8
6	Green	Equipment Ground

Units with Enclosure, 6-Pin Connector and Indicator Lamps

Each indicator lamp signals when the corresponding solenoid operator is actuated. Lamps that fail to light may need to be replaced or a check made to see if a connection has become loose.

Follow the service kit instructions included with the repair kits for proper installation of replacement lamps.

For units with DC solenoids and indicator lamps red wire is (+) positive white wire is (-) negative.

⚠ **Caution: DC solenoids with indicator lamps are polarity sensitive. Observe polarities indicated above.**

Available Lamps

Description	Part Number
Lamp (120/60AC) with spring clip	K352428B
Lamp (24VDC) with spring clip	K352429B

15mm 3-Pin DIN 43650C

Description	Connector with 6' (2m) Cord	Connector
PS2932P	PS2932JP	Unlighted
PS294675P	PS2946J75P*	Light – 12VAC or DC
PS294679P	PS2946J79P*	Light – 24VAC or DC
PS294683P	PS2946J83P*	Light – 110/120VAC

* LED with surge suppression.

Note: Max ø6.5mm cable size required for connector w/o 6' (2m) cord.

Engineering Data:
Conductors: 2 Poles Plus Ground
Cable Range (Connector Only): 4 to 6mm (0.16 to 0.24 Inch)
Contact Spacing: 8mm

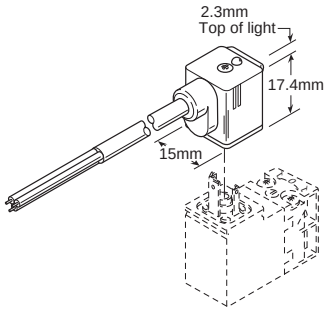

Service Kit

Part Number	Kit Contents
K352413B	Piston, Poppet Assembly, all Rubber Seals and Gaskets

Parker Hannifin Corporation
Pneumatic Division
Richland, Michigan
www.parker.com/pneumatics

Flow Characteristics

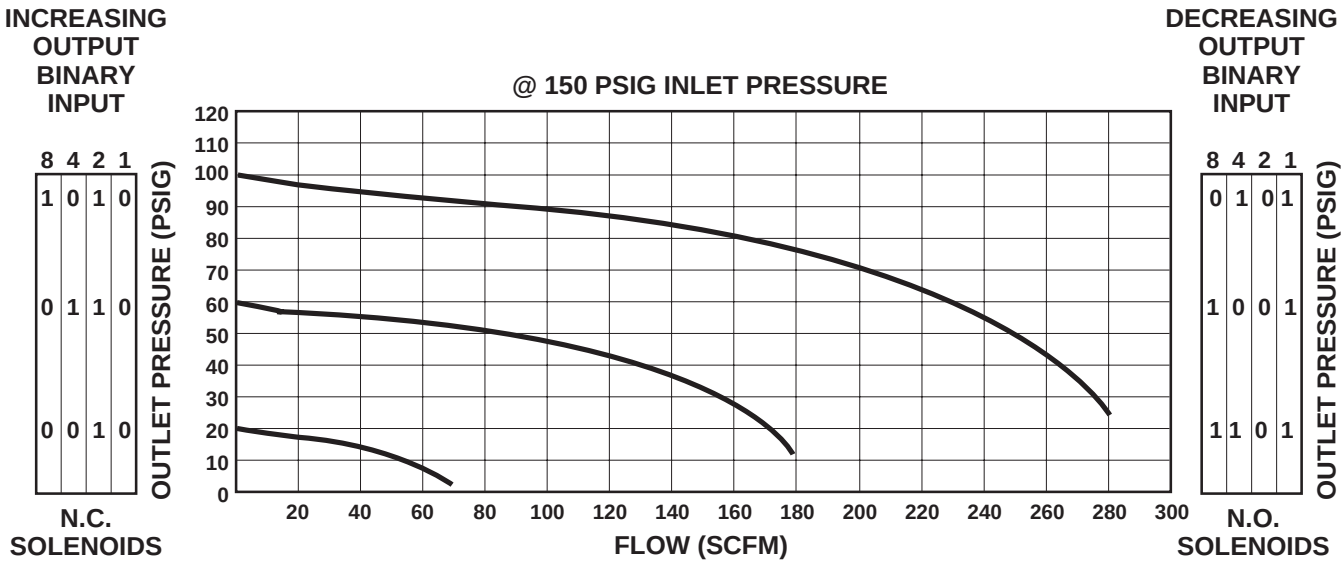

Typical Time Response

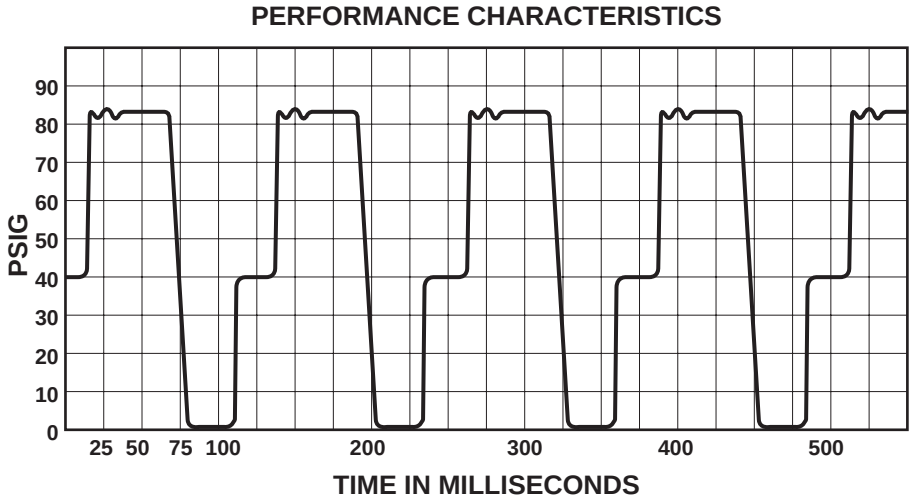

Actual test results show rapid response on a robot welding operation at a major U.S. automotive manufacturer.

NOTE: Although graph illustrates pressure dropping to 0 PSIG at the end of each cycle, the PAR™-15 valve can shift down to intermediate pressure steps, i.e. from 75 PSIG to 45 PSIG, without returning to 0 PSIG first.

Parker Hannifin Corporation
Pneumatic Division
Richland, Michigan
www.parker.com/pneumatics

LV & EZ Series

Lockout Valves, 3-Way, 3-Port, 2-Position

Section G

www.parker.com/pneu/lv

LV Series
- Basic Features G2
- Applications G2
- Mounting G2
- Dimensions G2

LV Series Technical Information
- Operation G3
- Specifications G3
- Ordering Information G3

EZ Series
- Basic Features G4
- Applications G4
- Mounting G4
- Dimensions G4

EZ Series Technical Information
- Operation G5
- Specifications G5
- Ordering Information G5

Flow & Safety Standards G6

Bold text part numbers are standard.
Standard text part numbers may have longer lead times.

Parker Hannifin Corporation
Pneumatic Division
Richland, Michigan
www.parker.com/pneumatics

LV Series

Features

- Used in systems for compliance with OSHA Standard 29 CFR Part 1910
- 3/8 inch to 1-1/4 inch Pipe Sizes
- Cv's from 6.0 to 14
- 3/4 and 1-1/4 inch Exhaust Ports available
- Rugged Cast Aluminum Alloy Body
- Inline or Surface Mountable
- Safety Yellow and Red for High Visibility
- Detented Spool
- Exhaust Port Threaded for Installation of Silencer or Line for Remote Exhausting

1-1/4" Exhaust Shown

Applications

Lockout valves are installed in pneumatic drop legs, or individual pneumatic control lines (see Figure 1). In accordance with OSHA procedures, lockout valves are used during maintenance and service procedures of pneumatically (air) operated equipment. Prior to servicing, the red handle is pressed inward, blocking pressure and relieving all downstream air pressure. A padlock is installed through the locking hasp, Preventing accidental actuation during the maintenance procedure. Following maintenance, the padlock is removed and the red handle is pulled outward, returning air pressure to the system. (For complete Lockout / Tagout procedures, consult OSHA Standard 29 CFR Part 1910 in U.S. Federal Register/Vol. 54 No. 169, Friday, September 1, 1989 / Page 36644.)

Mounting

Valves can be inline mounted or surface mounted using the two 11/32" mounting holes provided in the valve body. Mount valves in plain view with the handle oriented for accessibility.

Dimensions

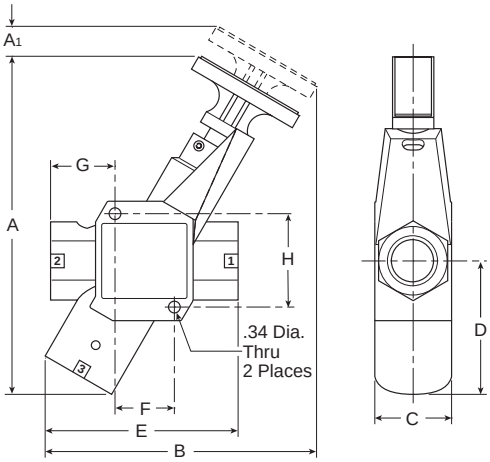

LV Series, 3/4" Exhaust Port Inches (mm)

A	A1	B	C	D
8.32 (211)	0.64 (16)	6.60 (168)	2.00 (51)	3.06 (78)
E	**F**	**G**	**H**	
4.24 (108)	1.32 (111)	1.56 (40)	2.21 (56)	

LV Series, 1-1/4" Exhaust Port Inches (mm)

A	A1	B	C	D
9.91 (252)	0.85 (22)	7.95 (202)	2.25 (57)	3.91 (99)
E	**F**	**G**	**H**	
5.65 (144)	1.74 (44)	1.89 (48)	2.74 (70)	

Parker Hannifin Corporation
Pneumatic Division
Richland, Michigan
www.parker.com/pneumatics

Operation

Normal Machine Operation – Valve Open
With the handle pulled outward. Inlet Port 1 is open to outlet Port 2. Exhaust Port 3 is blocked.

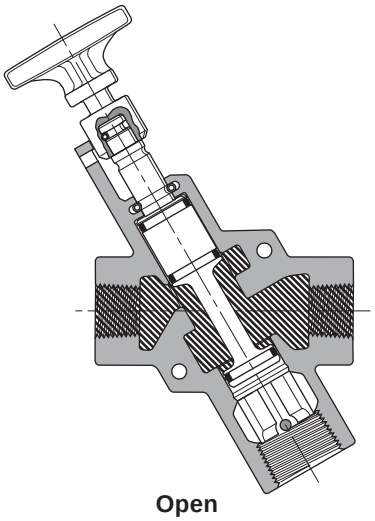

Open

Lockout Operation – Valve Closed
With the handle pushed inward. Inlet Port 1 is blocked. Outlet Port 2 is open to Exhaust Port 3.

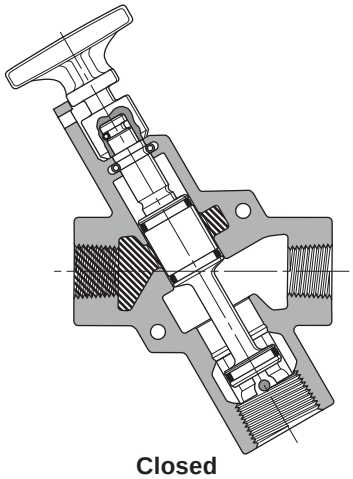

Closed

Specifications

Operating Pressure Range:
15 to 300 PSIG (103 to 2068 kPa)

Operating Temperature Range (Ambient):
40°F to 175°F (4°C to 80°C)

Lubrication:
For best results and service life, use clean, moisture free, lubricated air.

Recommended Lubricant:
F442 Oil

Materials of Construction

Body ..... Cast Aluminum Alloy
Handle ..... 3/8" - 1-1/4" Exhaust Port - Plastic
Spool ..... Aluminum
Seals ..... Carboxylated Nitrile
Detent Spring ..... Stainless Steel
Grease ..... Magnalube G†

† Trademark Magnalube

LV Series Model Number Index

Basic Series	Port Size	Thread Type	Port Size	Design Level
LV	6	N	A	B

Port Size (Inlet & Outlet Ports 1 & 2)

3	3/8" *
4	1/2" *
6	3/4" *‡
8	1" ‡
A	1-1/4" ‡

* Available with 3/4" Exhaust Port.
‡ Available with 1-1/4" Exhaust Port.

Thread Type (Ports 1, 2 & 3)

N	NPT
B	BSPP (G)

Port Size (Exhaust Port 3)

6	3/4"
A	1-1/4"

Design Level

B	Current

Parker Hannifin Corporation
Pneumatic Division
Richland, Michigan
www.parker.com/pneumatics

EZ Series

Features

- Combines Lockout and Soft-Start Functions in a Single Unit
- Used in systems for compliance with OSHA Standard 29 CFR Part 1910
- 3/8 inch to 1-1/4 inch Pipe Sizes
- Cv's from 3.7 to 13.7
- 3/4 and 1-1/4 inch: Exhaust Ports available
- Rugged Cast Aluminum Alloy Body
- Exhaust Port Threaded for Installation of Silencer or Line for Remote Exhausting
- Inline or Surface Mountable

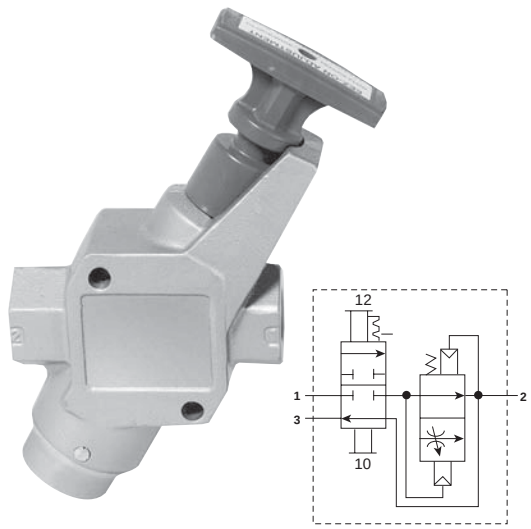

3/4" Exhaust Shown

Applications

EZ valves are installed in pneumatic drop legs, or individual pneumatic control lines (see Figure 1). In accordance with OSHA procedures, EZ valves are used during maintenance and service procedures of pneumatically (air) operated equipment. Prior to servicing, the blue handle is pressed inward, blocking pressure and relieving all downstream air pressure. A padlock is installed through the locking hasp, preventing accidental actuation during the maintenance procedure. Following maintenance, the padlock is removed and the blue handle is pulled outward, gradually returning air pressure to the system. (For complete Lockout / Tagout procedures, consult OSHA Standard 29 CFR Part 1910 in U.S. Federal Register/Vol. 54 No. 169, Friday, September 1, 1989 / Page 36644.)

Mounting

Valves can be inline mounted or surface mounted using the two 11/32" mounting holes provided in the valve body. Mount valves in plain view with the handle oriented for accessibility.

Dimensions

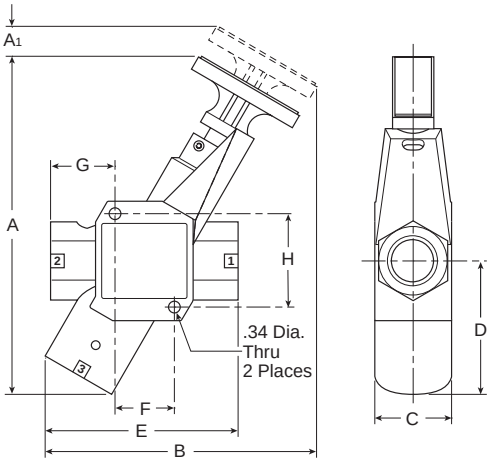

EZ Series, 3/4" Exhaust Port Inches (mm)

A	A1	B	C	D
8.32 (211)	0.64 (16)	6.60 (168)	2.00 (51)	3.06 (78)
E	**F**	**G**	**H**	
4.24 (108)	1.32 (111)	1.56 (40)	2.21 (56)	

EZ Series, 1-1/4" Exhaust Port Inches (mm)

A	A1	B	C	D
9.91 (252)	0.85 (22)	7.95 (202)	2.25 (57)	3.91 (99)
E	**F**	**G**	**H**	
5.65 (144)	1.74 (44)	1.89 (48)	2.74 (70)	

Parker Hannifin Corporation
Pneumatic Division
Richland, Michigan
www.parker.com/pneumatics

Operation

Normal Machine Operation – Valve Open
When the blue handle is pulled outward, the adjustable needle valve (accessed through the top of the handle) setting determines the rate of pressure buildup. When downstream pressure reaches the full flow described in the specifications below, Inlet Port 1 is open to outlet Port 2. Exhaust Port 3 is blocked.

Lockout Operation – Valve Closed
When the blue handle is pushed inward, the Inlet Port 1 is blocked. Downstream air is exhausted through Exhaust Port 3.

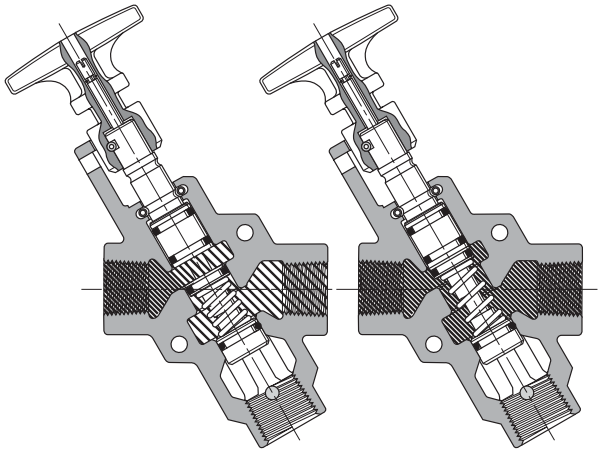

Open
Pressure Building Up

Open
Full Flow

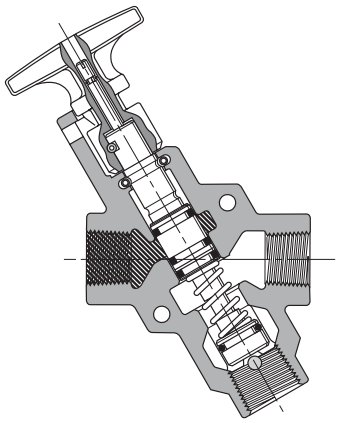

Closed

Specifications

Operating Pressure Range:
30 to 150 PSIG (2 to 10 bar)
Open to Full Flow: Inlet Pressure - 25 PSIG (1.7 bar)

Operating Temperature Range (Ambient):
40°F to 175°F (4°C to 80°C)

Lubrication:
For best results and service life, use clean, moisture free, lubricated air.

Recommended Lubricant:
F442 Oil

Materials of Construction

Body ..... Cast Aluminum Alloy
Handle ..... Plastic
Spool ..... Aluminum
Seals ..... Carboxylated Nitrile
Detent Spring ..... Stainless Steel
Grease ..... Magnalube G†

EZ Combination EEZ-On Series Model Number Index

Basic Series	Port Size	Thread Type	Design Level	Port Size
EZ	03	N	B	A

Port Size (Inlet & Outlet Ports 1 & 2)

03	3/8" *
04	1/2" *
06	3/4" *‡
08	1" ‡
0A	1-1/4" ‡

Thread Type (Ports 1, 2 & 3)

N	NPT
B	BSPP (G)
R	BSPT (R)

Design Level

B	Current

Port Size (Exhaust Port 3)

6	3/4"
A	1-1/4"

Notes:
* Available with 3/4" Exhaust Port.
‡ Available with 1-1/4" Exhaust Port.

† Trademark Magnalube

Parker Hannifin Corporation
Pneumatic Division
Richland, Michigan
www.parker.com/pneumatics

Technical Information

Flow

Model	1 to 2 Cv	2 to 3 Cv
LV3N6B	6.00	8.00
LV4N6B	7.10	8.30
LV6N6B	8.60	9.50
LV6NAB	13.00	12.00
LV8NAB	13.00	14.00
LVANAB	20.00	14.00

Model	1 to 2 Cv	2 to 3 Cv
EZ03NB6	3.79	3.78
EZ04NB6	5.31	3.77
EZ06NBA	6.01	9.25
EZ08NBA	11.18	8.13
EZ0ANBA	13.74	8.03

Schematic

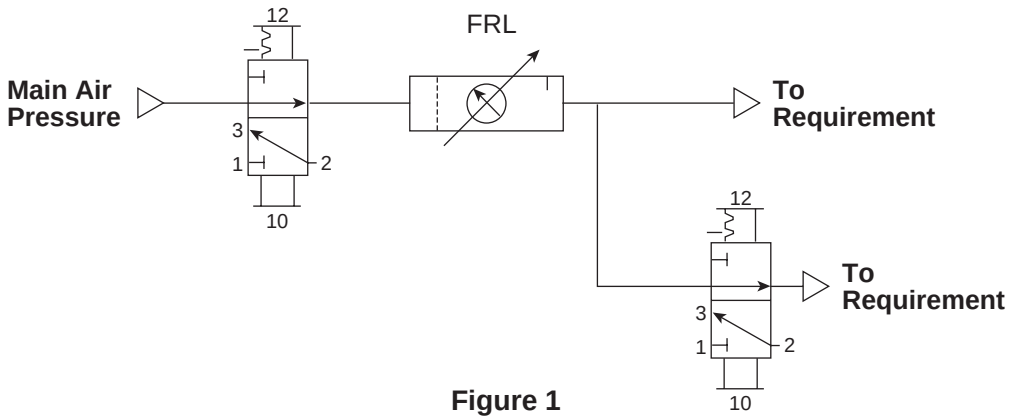

Figure 1
Lockout Valves Shown In The Passing Condition

Friday, September 1, 1989 the Occupational Safety and Health Administration (OSHA) passed a standard, 29CFR Part 1910, requiring certain lockout and / or tagout procedures for the control of a hazardous energy source. This standard addresses practices and procedures that are necessary to disable the release of potentially hazardous energy while maintenance and servicing activities are being performed. Tagout refers to the use of tags to warn workers when equipment using potentially hazardous energy is being serviced. Lockout is the procedure which ensures that all power to a piece of equipment is isolated, locked or blocked and dissipated using a method that cannot be readily removed to bypassed. Dissipation means stored energy at the equipment is brought to a neutral state. This standard is expected to save 120 lives and prevent 60,000 accidents a year. This OSHA Standard became effective October 31, 1989.

A typical application (Figure 1) shows a main lockout valve mounted in the main drop leg, before the split to machine functions. Additional lockout valves can be used to isolate individual control lines. Before servicing, the valve can be actuated and locked to isolate downstream from pressure, and exhaust downstream to atmosphere thus making equipment safe for maintenance.

To reference this standard see the U.S. Federal Register / Vol. 54, No. 169 / Friday, September 1, 1989 / Page 36644. For copies of this standard, contact U.S. Department of Labor, Occupational Safety and Health Administration, Office of Publication, Room N3101, Washington, DC 20210, (202) 523-9667.

Parker Hannifin Corporation
Pneumatic Division
Richland, Michigan
www.parker.com/pneumatics

Integrated Fittings

Section H

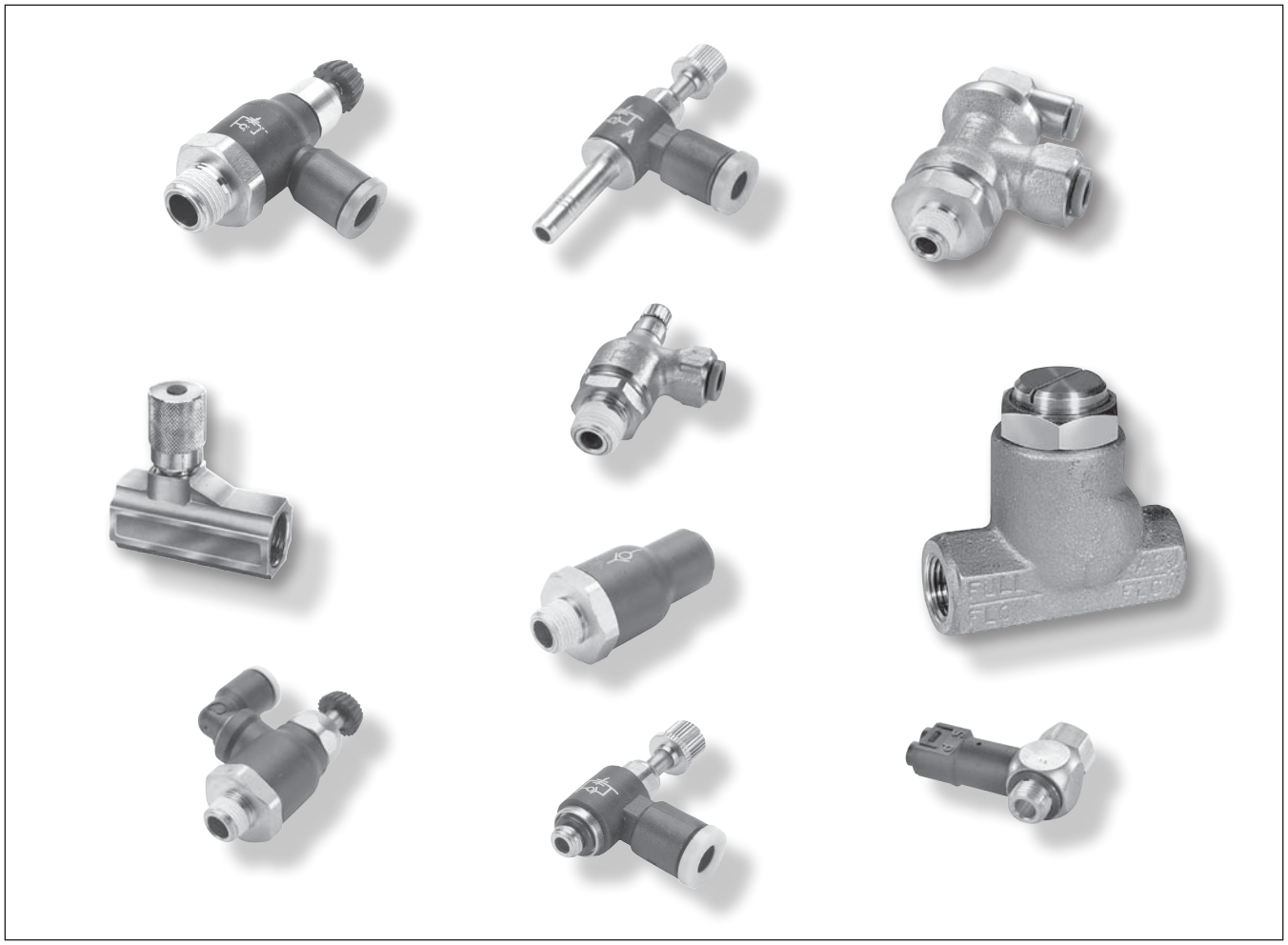

Product Index H2-H3
Compact Flow Control Valves H4-H5
Miniature Flow Control Valves H6-H7
Swivel Outlet Flow Control Valves H8-H9
Plug-in Flow Control Valves H10-H11
In-line Flow Control Valves H12-H15
Compact Metal Flow Control Valves H16-H17
Flow Control Check Valves H18-H20
Blocking Flow Controls Valves H22-H23
Threshold Sensor H24-H25

Parker Hannifin Corporation
Pneumatic Division
Richland, Michigan
www.parker.com/pneumatics

Compact Flow Control Valves	**FCC731** Meter Out Page H4	**FC731** Meter Out - BSPP Page H4	**FCCB731** Bi-Directional Flow Control Page H5	**FCCB731** Bi-directional Flow Control - BSPP Page H5	**FCKC731** Knobless Meter Out Flow Control Page H5
FCKC731 Knobless Flow Control - BSPP Page H5	**FCKCB731** Knobless Bi-directional Flow Control - BSPP Page H5	**Miniature Fow Control Valves**	**FCM731** Meter Out Flow Control Page H7	**FCM731** Flow Control - BSPP Page H7	**FCMB731** Bi-directional Flow Control - BSPP Page H7
FCMK731 Knobless Mini Meter Out Flow Control Page H7	**Swivel Outlet Flow Control Valves**	**FCCS731** Compact Swivel Outlet Flow Control Page H9	**FCMS731** Mini Swivel Outlet Flow Control Page H9	**FCMS731** Miniature Swivel Outlet - BSPP Page H9	**FCCS731** Compact Swivel Outlet - BSPP Page H9
Plug-In Flow Control Valves	**FCMSP731** Mini Flow Control Page H11	**FCMSP701** Miniature Flow Control Page H11	**FCCSP731** Compact Flow Control Page H11	**In-Line Flow Control Valves**	**FC832** Flow Control Page H13
FCB832 Bi-directional Flow Control Page H13	**FC832** Flow Control Page H13	**FCB832** Bi-directional Flow Control Page H13	**FCPM832** Panel Mountable Flow Control Page H13	**FC836** Threaded Flow Control Page H13	**FC836** Threaded Flow Control - BSPP Page H14
337 Series Micrometer Flow Control Valves Page H14	**337 Series** Micrometer Flow Control Valves - BSPP Page H14	**338 Series** Bi-directional Flow Control Valves Page H14	**338 Series** Bi-directional Flow Control Valves - BSPP Page H14	**3250 Series** Flow Control Valves Page H14	**3250 Series** Flow Control Valves - BSPP Page H15
3250 Series Flow Control Valves Page H15	**3250 Series** Flow Control Valves - BSPP Page H15	**Compact Metal Flow Control Valves**	**3251 Series** Right Angle Flow Control Valves Page H17	**FC705** Push-to-Connect Metal Flow Control Page H17	**FC701** Push-to-Connect Metal Flow Control - BSPP Page H17
FC708 Threaded Port Meter Out Flow Control Page H17	**FC702** Threaded Port Metal Flow Control - BSPP Page H17	**Flow Control Check Valves**	**32PLCK** In-Line Check Valve Page H19	**32PLCK** In-Line Check Valve Page H19	**W68PLCK** Male Check Valve Page H19

Parker Hannifin Corporation
Pneumatic Division
Richland, Michigan
www.parker.com/pneumatics

W68PLCKI Male Check Valve Meter In Page H19	**68PLCK** Male Check Valve Meter Out - BSPP Page H19	**68PLCKI** Male Check Valve Meter In - BSPP Page H19	**VC** Check Valve Page H19	**339 Series** Check Valve Page H20	**339 Series** Check Valve - BSPP Page H20
3047 Series Check Valve Page H20	**Blocking Flow Control Valves**	**FC601** Push-to-Connect Lock Out Valves Page H23	**FC601** Push-to-Connect Lock-Out Valve - BSPP Page H23	**FC602** Threaded Port Lock Out Valves Page H23	**FC608** Threaded Port Lock-Out Valve - BSPP Page H23
Threshold Sensor	**PSBJ731** Pneumatic - 5/32 Pilot Page H25	**PSBJ731** Pneumatic - 4mm Pilot Page H25	**PSPJ731** Pneumatic - 10-32 Pilot Page H25	**PSBJ708** Pneumatic - M5 Pilot Page H25	**PSPE701** Pneumati / Electric - BSPP Page H25

Parker Hannifin Corporation
Pneumatic Division
Richland, Michigan
www.parker.com/pneumatics

Features

Compact Flow Contol Valves

Materials Of Construction	
Body (Depending upon the Model):	• Glass reinforced nylon 6.6 • Brass
Gripping Ring:	Stainless Steel
Adjustment Screws	Nickel-plated brass
Locking Nut:	Nickel-plated brass
Base:	Nickel-plated brass

Nomenclature	
Example:FCC731-4-2	**Attribute:**
FC	Flow control
C	Compact
7	Right angle
3	Nylon body
1	Tube x Pipe
4	1/4 Tube O.D.
2	1/8 Pipe thread

Compact flow control regulators ensure excellent performance of flow and are perfectly suited for reduced spaces due to their small size. The sensitivity of the adjustment screw provides very precise air flow control and regulation. A locking nut guarantees stability of adjustment against vibration tampering of the flow setting.

Applicable Tube	
Tube O.D.	1/8, 5/32, 1/4, 3/8
Tube O.D. (mm)	4, 6, 8, 10, 12

Specifications	
Pressure Range:	15 to 145 PSI
Temperature Ranges:	30° to 160°F
Working Fluid:	Compressed air

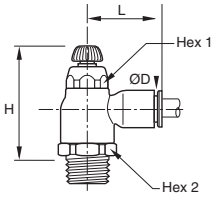

FCC731 Compact Meter Out

Part No.	Tube Size (In)	NPT	Hex 1 (In)	Hex 2 (In)	H Open	H Closed	L
FCC731-5/32-2	5/32	1/8	0.63	0.39	1.67	1.44	0.85
FCC731-5/32-4	5/32	1/4	0.63	0.39	1.67	1.44	0.85
FCC731-4-2	1/4	1/8	0.63	0.39	1.67	1.44	0.85
FCC731-4-4	1/4	1/4	0.63	0.39	1.67	1.44	0.85
FCC731-6-4	3/8	1/4	0.91	0.67	2.03	1.71	1.22
FCC731-6-6	3/8	3/8	0.91	0.67	2.03	1.71	1.22

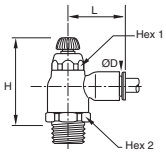

FC731 Compact Meter Out - BSPP

Part No.	Tube Size (mm)	BSPT	Hex 1 (mm)	Hex 2 (mm)	H Closed	H Open	L
FC731-4M-2G	4	1/8	10	16	38.0	44.0	22.0
FC731-6M-2G	6	1/8	10	16	38.0	44.0	22.0
FC731-6M-4G	6	1/4	10	16	36.5	42.5	22.0
FC731-8M-2G	8	1/8	14	19	41.5	48.0	28.0
FC731-8M-4G	8	1/4	14	19	41.5	48.0	28.0
FC731-8M-6G	8	3/8	14	19	41.5	48.0	28.0
FC731-10M-4G	10	1/4	17	23	45.5	53.5	31.5
FC731-10M-6G	10	3/8	17	23	45.5	54.0	31.5
FC731-12M-6G	12	3/8	17	23	45.5	54.0	35.0
FC731-12M-8G	12	1/2	17	24	45.5	54.0	35.0

Parker Hannifin Corporation
Pneumatic Division
Richland, Michigan
www.parker.com/pneumatics

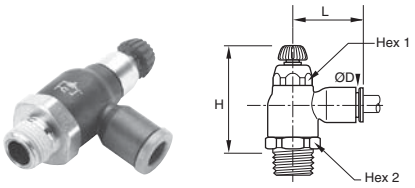

FCCB731 Compact Bi-Directional Flow Control

Part No.	Tube Size (In)	NPT	Hex 1 (In)	Hex 2 (In)	H Open	H Closed	L
FCCB731-5/32-2	5/32	1/8	0.63	0.39	1.67	1.44	0.85
FCCB731-4-2	1/4	1/8	0.63	0.39	1.67	1.44	0.85
FCCB731-4-4	1/4	1/4	0.63	0.39	1.67	1.44	0.85

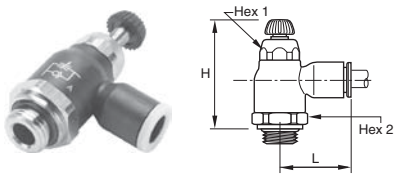

FCCB731 Compact Bi-directional Flow Control - BSPP

Part No.	Tube Size (mm)	BSPP	Hex 1 (mm)	Hex 2 (mm)	H Closed	H Open	L
FCCB731-4M-2G	4	1/8	10	16	38.0	44.0	22.0
FCCB731-6M-2G	6	1/8	10	16	38.0	44.0	22.0
FCCB731-6M-4G	6	1/4	10	16	36.5	42.5	22.0
FCCB731-8M-2G	8	1/8	14	19	41.5	48.0	28.0
FCCB731-8M-4G	8	1/4	14	19	41.5	48.0	28.0
FCCB731-8M-6G	8	3/8	14	19	41.5	48.0	28.0

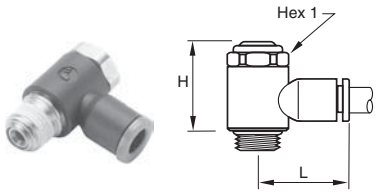

FCKC731 Knobless Meter Out Flow Control

Part No.	Tube Size (In)	NPT / UNF	Hex 1 (mm)	H	L
FCKC731-2-0	1/8	10-32		0.69	0.65
FCKC731-2-2	1/8	1/8	13	0.79	0.75
FCKC731-5/32-0	5/32	10-32		0.69	0.65
FCKC731-5/32-2	5/32	1/8	13	0.79	0.75
FCKC731-4-0	1/4	10-32		0.69	0.77
FCKC731-4-2	1/4	1/8	13	0.79	0.85
FCKC731-4-4	1/4	1/4	17	1.04	0.89
FCKC731-5-2	5/16	1/8	13	0.79	1.02
FCKC731-5-4	5/16	1/4	17	1.04	1.06
FCKC731-6-4	3/8	1/4	17	1.04	1.14
FCKC731-6-6	3/8	3/8	20	1.14	1.36

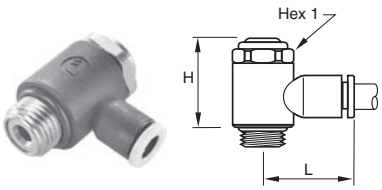

FCKC731 Knobless Compact Flow Control - BSPP

Part No.	Tube Size (mm)	BSPP / M5	Hex 1 (mm)	H	L
FCKC731-4M-M5	4	M5X0.8	8.0	17.5	17.0
FCKC731-4M-2G	4	1/8	13.0	25.0	19.0
FCKC731-6M-M5	6	M5X0.8	8.0	17.5	19.0
FCKC731-6M-2G	6	1/8	13.0	25.0	21.0
FCKC731-6M-4G	6	1/4	17.0	26.5	22.0
FCKC731-8M-2G	8	1/8	13.0	25.0	26.0
FCKC731-8M-4G	8	1/4	17.0	26.5	27.0
FCKC731-8M-6G	8	3/8	20.0	37.5	29.0
FCKC731-10M-4G	10	1/4	17.0	26.5	29.0
FCKC731-10M-6G	10	3/8	20.0	37.5	31.0
FCKC731-10M-8G	10	1/2	23.0	43.0	37.0
FCKC731-12M-6G	12	3/8	20.0	37.5	6.8
FCKC731-12M-8G	12	1/2	23.0	43.0	37.0

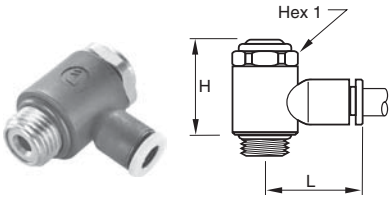

FCKCB731 Knobless Bi-directional Flow Control - BSPP

Part No.	Tube Size (mm)	BSPP / M5	Hex 1 (mm)	H	L
FCKCB731-4M-M5	4	M5X0.8	8	17.5	17.0
FCKCB731 -4M-2G	4	1/8	13	25.0	19.0
FCKCB731 -6M-M5	6	M5X0.8	8	17.5	19.0
FCKCB731 -6M-2G	6	1/8	13	25.0	21.0
FCKCB731 -6M-4G	6	1/4	17	26.5	22.0
FCKCB731 -8M-2G	8	1/8	13	25.0	26.0
FCKCB731 -8M-4G	8	1/4	17	26.5	27.0
FCKCB731 -8M-6G	8	3/8	20	37.5	29.0

Parker Hannifin Corporation
Pneumatic Division
Richland, Michigan
www.parker.com/pneumatics

Materials of Construction	
Body (Depending upon the Model):	• Glass reinforced nylon 6.6 • Brass
Gripping Ring:	Stainless Steel
Adjustment Screws	Nickel-plated brass
Locking Nut:	Nickel-plated brass
Base:	Nickel-plated brass

Nomenclature	
Example: FCM731-4-2	**Attribute:**
FC	Flow control
M	Miniature
7	Right angle
3	Nylon body
1	Tube x pipe
4	1/4 Tube O.D.
2	1/8 Pipe thread

Applicable Tube	
Tube O.D.	1/8, 5/32, 1/4
Tube O.D. (mm)	3, 4, 6, 8

Specifications	
Pressure Range:	15 to 145 PSI
Temperature Ranges:	30° to 160°F
Working Fluid:	Compressed air

The miniature flow control regulator is especially adapted for all very small sized pneumatic applications (micro-pneumatic in particular). They are specifically designed for use with small bore cylinders (pancake / flat cylinders). Miniature flow control regulators are available in meter out, meter in and bi-directional versions.

Parker Hannifin Corporation
Pneumatic Division
Richland, Michigan
www.parker.com/pneumatics

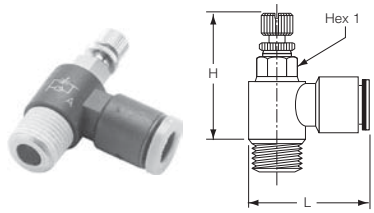

FCM731 Miniature Meter Out Flow Control

Part No.	Tube Size (In)	NPT	Hex 1 mm	H Open	H Closed	L
FCM731-2-0	1/8	10-32	6	1.14	0.91	0.67
FCM731-2-2	1/8	1/8	7	1.41	1.26	0.69
FCM731-5/32-0	5/32	10-32	6	1.02	0.93	0.67
FCM731-5/32-2	5/32	1/8	7	1.16	1.06	0.71
FCM731-4-0	1/4	10-32	6	1.02	0.93	0.73
FCM731-4-2	1/4	1/8	7	1.16	1.06	0.75
FCM731-4-4	1/4	1/4	8	1.28	1.18	0.77

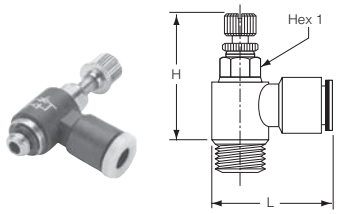

FCM731 Miniature Flow Control - BSPP

Part No.	Tube Size (mm)	BSPP	Hex 1	H Closed	H Open	L
FCM731-3M-M3	3	M3X0.5	6	23.5	26.0	17.0
FCM731-3M-M5	3	M5X0.8	6	23.5	26.0	17.0
FCM731-4M-M3	4	M3X0.5	6	23.5	26.0	16.5
FCM731-4M-M5	4	M5X0.8	6	23.5	26.0	17.0
FCM731-4M-2G	4	1/8	7	27.0	29.5	18.0
FCM731-6M-M5	6	M5X0.8	6	23.5	26.0	18.0
FCM731-6M-2G	6	1/8	7	27.0	29.5	18.5
FCM731-6M-4G	6	1/4	8	30.0	32.5	19.0
FCM731-8M-2G	8	1/8	13	26.5	31.0	26.0
FCM731-8M-4G	8	1/4	16	29.0	34.0	27.5
FCM731-8M-6G	8	3/8	20	36.0	42.0	29.0

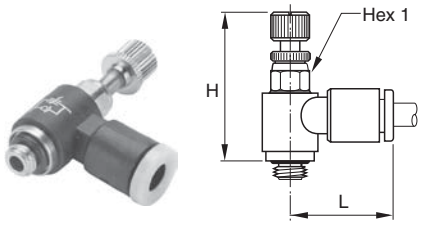

FCMB731 Miniature Bi-directional Flow Control - BSPP

Part No.	Tube Size (mm)	BSPP	Hex 1	H Closed	H Open	L
FCMB731-4M-M5	4	M5X0.8	6	23.5	26.0	16.5
FCMB731-4M-2G	4	1/8	7	27.0	29.5	17.0
FCMB731-6M-M5	6	M5X0.8	6	23.5	26.0	18.0
FCMB731-6M-2G	6	1/8	7	27.0	29.5	18.0
FCMB731-6M-4G	6	1/4	8	30.0	32.5	18.5

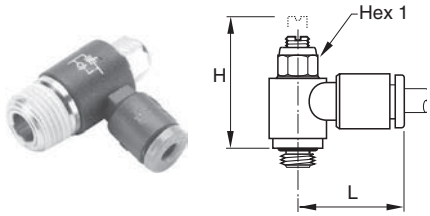

FCMK731 Knobless Mini Meter Out Flow Control

Part No.	Tube Size (In)	NPT	Hex 1 mm	H Open	H Closed	L
FCMK731-2-0	1/8	10-32	6	0.79	0.65	0.65
FCMK731-2-2	1/8	1/8	6	0.85	0.71	0.71
FCMK731-5/32-0	5/32	10-32	6	0.79	0.65	0.65
FCMK731-5/32-2	5/32	1/8	6	0.85	0.71	0.71
FCMK731-4-0	1/4	10-32	6	0.79	0.65	0.65
FCMK731-4-2	1/4	1/8	6	0.85	0.71	0.73
FCMK731-4-4	1/4	1/4	6	0.97	0.83	0.73

Parker Hannifin Corporation
Pneumatic Division
Richland, Michigan
www.parker.com/pneumatics

Materials of Construction	
Body:	Glass reinforced nylon 6.6
Gripping Ring:	Stainless Steel
Adjustment Screws	Nickel-plated brass
Locking Nut:	Nickel-plated brass
Base:	Nickel-plated brass

Nomenclature	
Example: FCMS731-5/32-2	**Attribute:**
FC	Flow control
M	Miniature
S	Swivel outlet
7	Right angle
3	Nylon body
1	Tube x pipe
5/32	5/32 Tube O.D.
2	1/8 Pipe thread

Applicable Tube	
Tube O.D.	5/32, 1/4, 3/8
Tube O.D. (mm)	4, 6, 8, 10, 12

Specifications	
Pressure Range:	15 to 145 PSI
Temperature Ranges:	30° to 160°F
Working Fluid:	Compressed air

Flow control regulators with “swivel outlet” are especially designed to allow a vertical or angled tube exit where access is restricted. The swivel outlet comes with instant push-in connection to ease installation. Flow control regulators with swivel outlet are available in meter out and meter in versions.

Parker Hannifin Corporation
Pneumatic Division
Richland, Michigan
www.parker.com/pneumatics

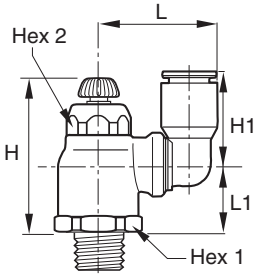

FCCS731 Compact Swivel Outlet Flow Control

Part No.	Tube Size (In)	NPT	Hex 1 mm	Hex 2 mm	H Closed	H Open	H1	L	L1
FCCS731-4-2	1/4	1/8	19	10	1.87	2.09	0.63	0.93	0.65
FCCS731-4-4	1/4	1/4	19	14	1.79	1.99	0.73	1.00	0.89
FCCS731-6-4	3/8	1/4	23	17	1.93	2.20	1.04	1.34	0.97
FCCS731-6-6	3/8	3/8	23	17	1.93	2.20	1.04	1.34	0.97

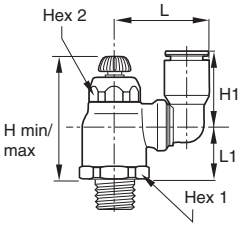

FCCS731 Compact Swivel Outlet - BSPP

Part No.	Tube Size (mm)	BSPP	Hex 1 mm	Hex 2 mm	H Closed	H Open	H1	L	L1
FCCS731-6M-2G	6	1/8	16	10	38.0	44.0	16.0	23.5	18.0
FCCS731-6M-4G	6	1/4	16	10	36.5	42.5	16.0	23.5	16.5
FCCS731-8M-2G	8	1/8	19	14	41.5	48.0	23.0	28.0	19.0
FCCS731-8M-4G	8	1/4	19	14	41.5	48.0	23.0	28.0	19.5
FCCS731-8M-6G	10	3/8	19	14	41.5	48.0	23.0	28.0	17.5
FCCS731-10M-4G	10	1/4	23	17	45.5	53.5	26.5	35.0	21.0
FCCS731-10M-6G	10	3/8	23	17	45.5	54.0	26.5	35.0	21.5
FCCS731-12M-6G	12	3/8	23	17	45.5	54.0	31.0	38.0	21.5
FCCS731-12M-8G	12	1/2	23	17	45.5	54.0	31.0	38.0	21.0

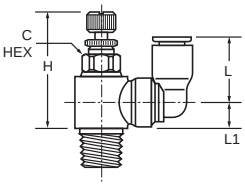

FCMS731 Mini Swivel Outlet Flow Control

Part No.	Tube Size (In)	NPT	Hex 1 mm	H Closed	H Open	H1	L	L1
FCMS731-5/32-0	5/32	10-32	6	0.96	1.08	0.55	0.73	0.26
FCMS731-5/32-2	5/32	1/8	8	1.08	1.20	0.55	0.73	0.33

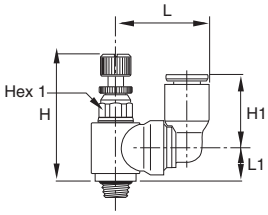

FCMS731 Miniature Swivel Outlet - BSPP

Part No.	Tube Size (mm)	BSPP	Hex 1 mm	H Closed	H Open	H1	L	L1
FCMS731-4M-M5	4	M5X0.8	6	24.5	27.5	14.5	19.5	6.5
FCMS731-4M-2G	4	1/8	7	27.5	31.0	14.5	20.0	8.5
FCMS731-6M-M5	6	M5X0.8	6	24.5	27.5	16.0	21.5	6.5
FCMS731-6M-2G	6	1/8	7	27.5	31.0	16.0	22.0	8.5

Parker Hannifin Corporation
Pneumatic Division
Richland, Michigan
www.parker.com/pneumatics

Features

Plug-In Flow Control Valves

Materials of Construction	
Body:	Glass reinforced nylon 6.6
Gripping Ring:	Stainless Steel
Adjustment Screws	Nickel-plated brass
Locking Nut:	Nickel-plated brass
Tailpiece:	Nickel-plated brass

Nomenclature	
Example: FCMS731-5/32-2	**Attribute:**
FC	Flow control
M	Miniature
7	Right angle
3	Nylon body
1	Tube x pipe
4	1/4 Tube O.D.
2	1/8 Pipe thread

Applicable Tube	
Tube O.D.	1/8, 5/32, 1/4
Tube O.D. (mm)	4, 6, 8, 10, 12

Specifications	
Pressure Range:	15 to 145 PSI
Temperature Ranges:	30° to 160°F
Working Fluid:	Compressed air

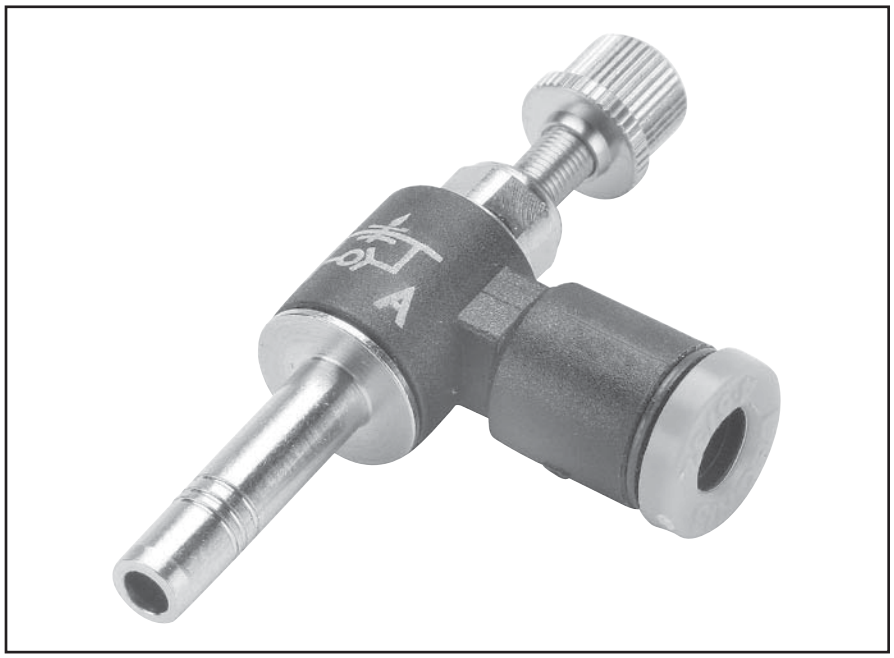

Plug-in flow control regulators can be directly mounted into existing fittings and allow very compact installations. They are particularly suited for mounting in manifolds using cartridges. Their design and function give equal performance to that of flow control regulators with threaded connections.

Parker Hannifin Corporation
Pneumatic Division
Richland, Michigan
www.parker.com/pneumatics

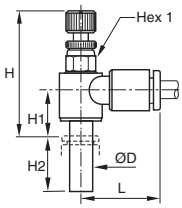

FCMSP731 Plug-In Mini Flow Control

Part No.	Tube Size (In)	Hex 1 mm	H Open	H Closed	H1	H2	L
FCMSP731-2	1/8	6	1.04	0.94	0.12	0.59	0.67
FCMSP731-5/32	5/32	6	1.10	1.00	0.37	0.61	0.67
FCMSP731-4	1/4	7	1.18	1.08	0.12	0.73	0.73

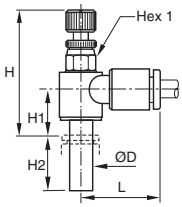

FCMSP701 - Plug-In Miniature Flow Control

Part No.	Tube Size (mm)	Hex 1 mm	H Closed	H Open	H1	H2	L
FCMSP701-4M	4	6	25.5	28.0	9.5	15.5	17.0
FCMSP701-6M	6	7	27.5	29.0	10.5	17.0	18.5

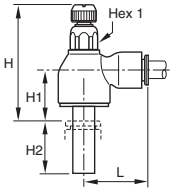

FCCSP731 Plug-In Compact Flow Control

Part No.	Tube Size (mm)	Hex 1 mm	H Closed	H Open	H1	H2	L
FCCSP731-6M	6	10	35.0	41.0	14.0	17.0	22.0
FCCSP731-8M	8	14	39.5	46.5	16.0	21.5	28.0
FCCSP731-10M	10	17	43.5	51.5	17.5	24.5	31.5
FCCSP731-12M	12	17	43.0	51.0	17.0	27.0	31.5

Parker Hannifin Corporation
Pneumatic Division
Richland, Michigan
www.parker.com/pneumatics

Materials of Construction	
Body:	Glass reinforced nylon 6.6
Gripping Ring:	Stainless Steel
Adjustment Screws	Nickel-plated brass
Locking Nut:	Nickel-plated brass
Tailpiece:	Nickel-plated brass

Nomenclature	
Example: FCMS731-5/32-2	**Attribute:**
FC	Flow control
M	Miniature
8	In-line
3	Nylon body
2	Tube x pipe
4	1/4 Tube O.D.

Applicable Tube	
Tube O.D.	5/32, 1/4, 5/16, 3/8, 1/2
Tube O.D. (mm)	4, 6, 8, 10, 12

Specifications	
Pressure Range:	15 to 145 PSI
Temperature Ranges:	30° to 160°F
Working Fluid:	Compressed air

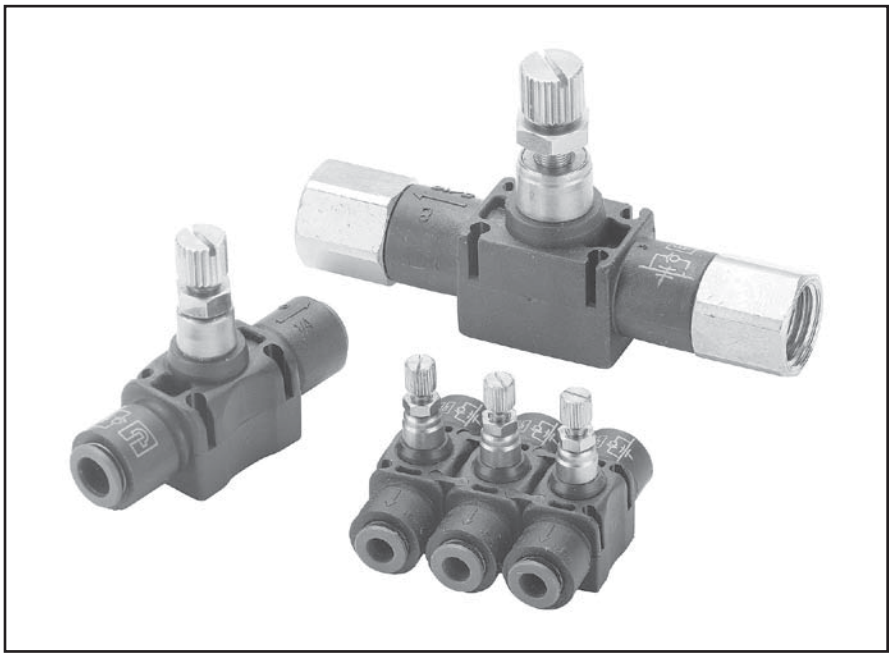

In-line flow controls are unidirectional flow control valves. Intake air flows freely through the flow control; exhaust air is metered out through a specially designed adjustment screw. An arrow on the body of the valve indicates the direction of controlled flow. They can be easily added to existing circuitry. Simply splice it into the cylinder port line.

They can be used individually or they may be stacked together using two joining clips.

Parker Hannifin Corporation
Pneumatic Division
Richland, Michigan
www.parker.com/pneumatics

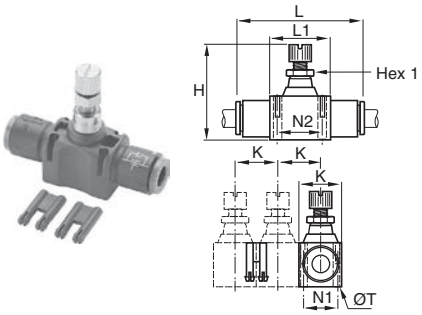

FC832 In-Line Flow Control

Part No.	Tube Size (In)	Hex 1 mm	H Closed	H Open	K	L	L1	N1	N2	T
FC832-5/32	5/32	5	1.15	1.31	0.47	1.52	0.59	0.31	0.43	0.09
FC832-4	1/4	8	1.54	1.74	0.66	2.00	0.90	0.43	0.66	0.12
FC832-5	5/16	11	1.73	1.97	0.73	2.38	1.02	0.49	0.79	0.13
FC832-6	3/8	14	2.03	2.38	0.94	2.87	1.29	0.62	1.01	1.60
FC832-8	1/2	14	2.24	2.63	1.09	3.35	1.37	0.78	1.07	0.16

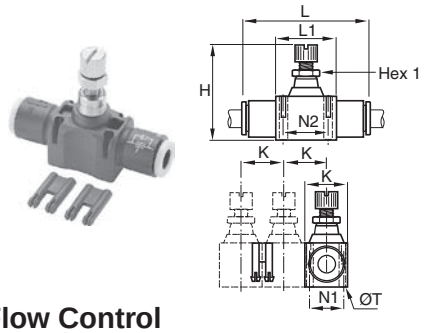

FC832 In-Line Flow Control

Part No.	Tube Size (mm)	Hex 1 mm	H Closed	H Open	K	L	L1	N1	N2	T
FC832-4M	4	5	29.5	33.5	12.0	39.0	15.0	8.0	11.0	2.2
FC832-6M	6	8	39.5	44.5	17.0	54.0	23.0	11.0	17.0	3.2
FC832-8M	8	11	44.0	50.0	18.5	60.5	26.0	12.5	20.0	3.2
FC832-10M	10	14	52.0	61.0	24.0	76.0	33.0	16.0	26.0	4.2
FC832-12M	12	14	57.5	67.5	28.0	86.0	35.0	20.0	27.5	4.2

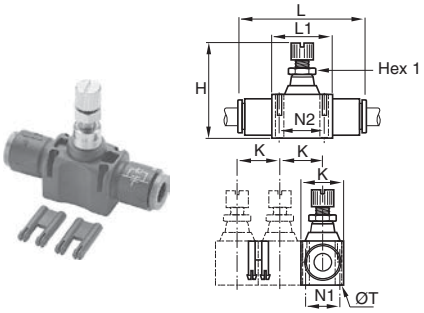

FCB832 In-Line Bi-directional Flow Control

Part No.	Tube Size (In)	Hex 1 mm	H Closed	H Open	K	L	L1	N1	N2	T
FCB832-5/32	5/32	5	1.15	1.31	0.47	1.52	0.59	0.31	0.43	0.09
FCB832-4	1/4	8	1.54	1.74	0.66	2.00	0.90	0.43	0.66	0.12
FCB832-5	5/16	11	1.73	1.97	0.73	2.38	1.02	0.49	0.79	0.13

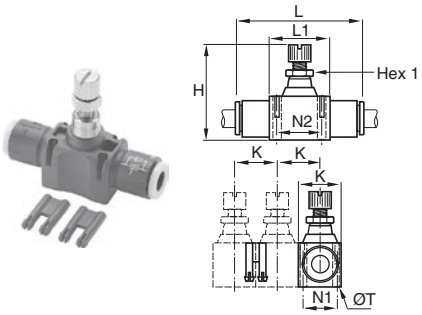

FCB832 In-Line Bi-directional Flow Control

Part No.	Tube Size (mm)	Hex 1 mm	H Closed	H Open	K	L	L1	N1	N2	T
FCB832-4M	4	5	29.5	33.5	12.0	39.0	15.0	8.0	11.0	2.2
FCB832-6M	6	8	39.5	44.5	17.0	54.0	23.0	11.0	17.0	3.2
FCB832-8M	8	11	44.0	50.0	18.5	60.5	26.0	12.5	20.0	3.2

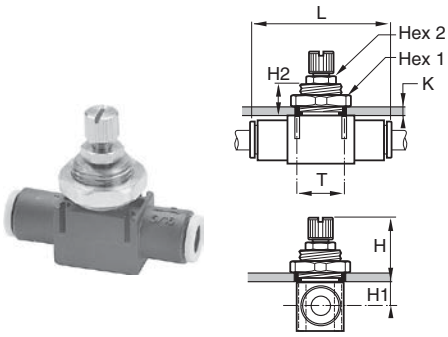

FCPM832 In-Line Panel Mountable Flow Control

Part No.	Tube Size (mm)	Hex 1 (mm)	Hex 2 (mm)	H Closed	H Open	K	L	H1	H2	T
FCPM832-4M	4	14		21.5	25.5	6.0	39.0	6.5	11.0	10.5
FCPM832-6M	6	19		27.5	32.5	7.0	54.0	7.5	13.5	16.5
FCPM832-8M	8	24	11	28.5	34.5	7.0	60.5	9.0	13.5	18.5
FCPM832-10M	10	30	14	29.5	38.5	7.0	76.0	11.5	13.5	24.5
FCPM832-12M	12	32	14	32.0	42.0	8.0	86.0	12.5	15.5	27.5

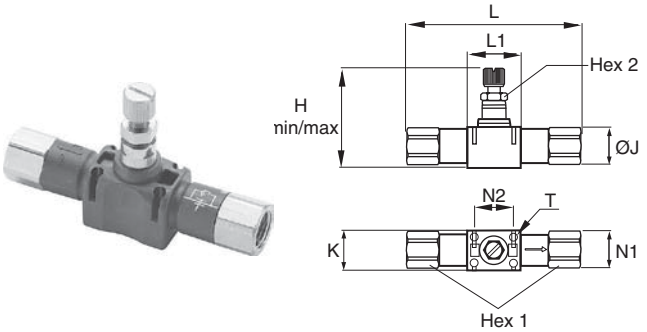

FC836 Threaded In-Line Flow Control

Part No.	NPT	Hex 1 (mm)	Hex 2 (mm)	H Closed	H Open	K	L	L1	N1	N2	T
FC836-2	1/8	13	8.00	1.56	1.75	0.67	2.70	0.91	0.43	0.67	0.12
FC836-4	1/4	16	11.00	1.73	1.97	0.73	3.27	1.02	0.49	0.79	0.12
FC836-6	3/8	22	14.00	2.05	2.40	0.94	3.82	1.30	0.63	1.02	0.16
FC836-8	1/2	24	14.00	2.26	2.66	1.10	4.76	1.38	0.79	1.08	0.16

Parker Hannifin Corporation
Pneumatic Division
Richland, Michigan
www.parker.com/pneumatics

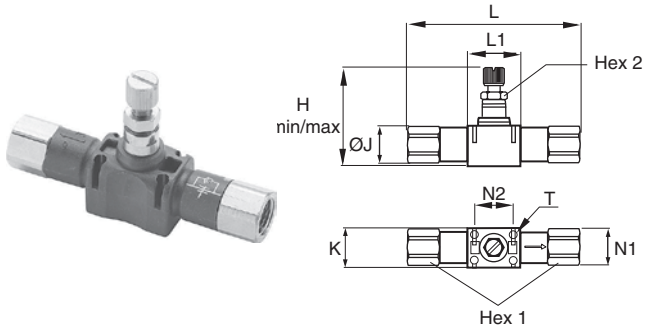

FC836 Threaded In-Line Flow Control - BSPP

Part No.	BSPP	Hex 1 (mm)	Hex 2 (mm)	H Closed	H Open	K	L	N1	N2	T
FC836-2G	1/8	13	8	39.5	44.5	17.0	68.5	11.0	17.0	3.2
FC836-4G	1/4	16	11	44.0	50.0	18.5	83.0	12.5	20.0	3.2
FC836-6G	3/8	19	14	52.0	61.0	24.0	97.0	16.0	26.0	4.2
FC836-8G	1/2	24	14	57.5	67.5	28.0	121.0	20.0	27.5	4.2

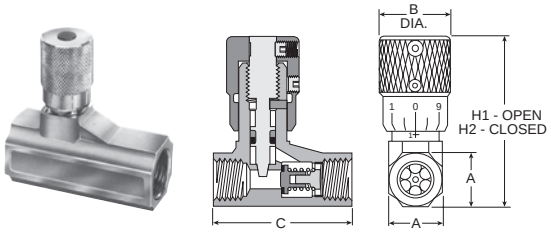

337 Micrometer Flow Control Valves

Part No.	Port Size	A	B	C	H1	H2
00337 1000	1/8"	9/16"	0.75	1.47	2.03	1.81
00337 1001	1/4"	11/16"	0.75	1.47	2.28	2.03
00337 1002	3/8"	7/8"	0.88	2.31	2.84	2.53
00337 1003	1/2"	1-3/16"	1.06	3.25	3.62	3.22
00337 1004	3/4"	1-3/8"	1.06	3.25	3.72	3.31

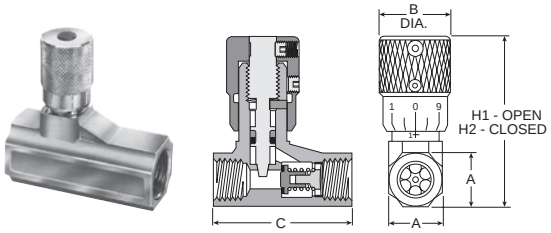

337 Micrometer Flow Control Valves - BSPP

Part No.	Port Size	A	B	C	H1	H2
00337G1000	1/8"	9/16"	0.75	1.47	2.03	1.81
00337G1001	1/4"	11/16"	0.75	1.47	2.28	2.03

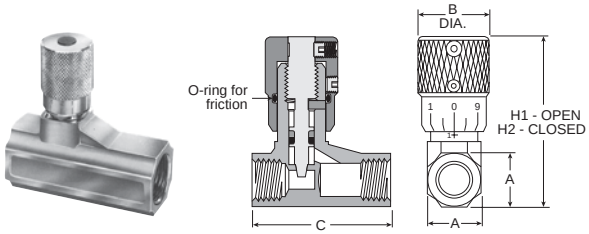

338 Bi-directional Flow Control Valves

Part No.	Port Size	A	B	C	H1	H2
00338 1100	1/8"	9/16"	0.75	1.47	2.03	1.81
00338 1101	1/4"	11/16"	0.75	1.47	2.28	2.03
00338 1102	3/8"	7/8"	0.88	2.31	2.84	2.53
00338 1103	1/2"	1-3/16"	1.06	3.25	3.62	3.22
00338 1104	3/4"	1-3/8"	1.06	3.25	3.72	3.31

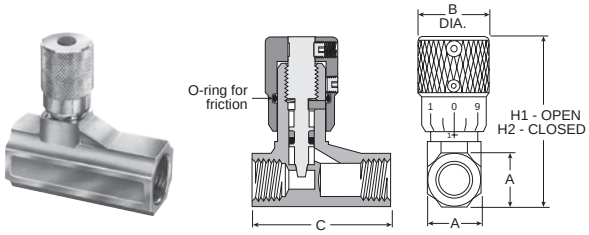

338 Bi-directional Flow Control Valves - BSPP

Part No.	Port Size	A	B	C	H1	H2
00338G1100	1/8"	9/16"	0.75	1.47	2.03	1.81
00338G1101	1/4"	11/16"	0.75	1.47	2.28	2.03

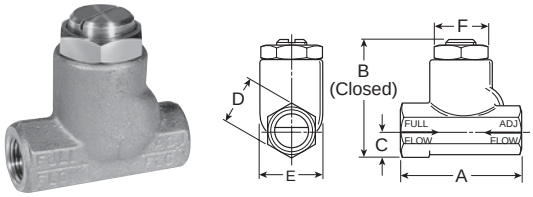

3250 Flow Control Valves

Part No.	Port Size	A	B	C	D	E	F
03250 0119	1/8"	1.75	1.56	0.37	0.62	0.81	0.68
03250 0219	1/4"	2.33	1.97	0.44	0.75	1.09	0.94
03250 0319	3/8"	2.66	2.44	0.56	1.00	1.38	1.19
03250 0419	1/2"	3.11	3.06	0.75	1.25	1.63	1.38
03250 0519	3/4"	3.56	3.69	0.88	1.50	2.00	1.75

Parker Hannifin Corporation
Pneumatic Division
Richland, Michigan
www.parker.com/pneumatics

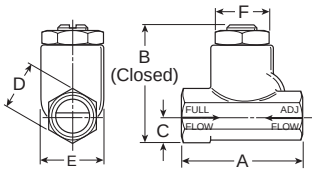

3250 Flow Control Valves - BSPP

Part No.	Port Size	A	B	C	D	E	F
3250G0119	1/8"	1.75	1.56	0.37	0.62	0.81	0.68
3250G0219	1/4"	2.33	1.97	0.44	0.75	1.09	0.94
3250G0319	3/8"	2.66	2.44	0.56	1.00	1.38	1.19
3250G0419	1/2"	3.11	3.06	0.75	1.25	1.63	1.38
3250G0519	3/4"	3.56	3.69	0.88	1.50	2.00	1.75

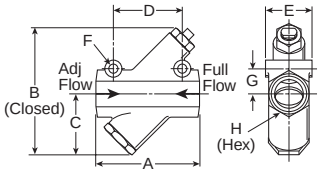

3250 Flow Control Valves

Part No.	Port Size	A	B	C	D	E	F	G	H
3250G1000	1"	5.00	6.50	3.00	3.25	2.25	.39	1.31	2.13
3250G1250	1-1/4"	5.00	6.50	3.00	3.25	2.25	.39	1.31	2.13
3250G1500	1-1/2"	5.88	8.00	3.75	3.50	2.50	.39	1.50	2.38

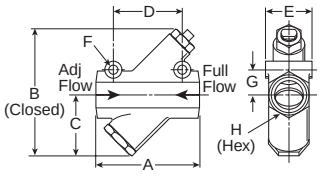

3250 Flow Control Valves - BSPP

Part No.	Port Size	A	B	C	D	E	F	G	H
03250 1000	**1"**	5.00	6.50	3.00	3.25	2.25	.39	1.31	2.13
03250 1250	**1-1/4"**	5.00	6.50	3.00	3.25	2.25	.39	1.31	2.13
03250 1500	**1-1/2"**	5.88	8.00	3.75	3.50	2.50	.39	1.50	2.38

Parker Hannifin Corporation
Pneumatic Division
Richland, Michigan
www.parker.com/pneumatics

Materials of Construction	
Body:	Treated Brass
Gripping Ring:	Stainless Steel
Adjustment Screws	Nickel-plated brass
Locking Nut:	Nickel-plated brass
Tailpiece:	Nickel-plated brass

Nomenclature	
Example: FCMS731-5/32-2	**Attribute:**
FC	Flow control
7	Right angle
0	Brass body
1	Tube x pipe
4	1/4 Tube O.D.
2	1/8 Pipe thread

Applicable Tube	
Tube O.D.	1/8, 5/32, 1/4, 3/8
Tube O.D. (mm)	4, 6, 8, 10, 12, 14

Metal flow control regulators are suited for use in severe conditions (temperatures, sparks, abrasion, etc). The screw and locking nut have been designed for easy manipulation, by hand. Adjustment can be made with a screwdriver and locking by use of a wrench.

Specifications	
Pressure Range:	15 to 145 PSI
Temperature Ranges:	30° to 160°F
Working Fluid:	Compressed air

Parker Hannifin Corporation
Pneumatic Division
Richland, Michigan
www.parker.com/pneumatics

Shown with Threaded Inlet

Shown with Prestolok Inlet Fitting

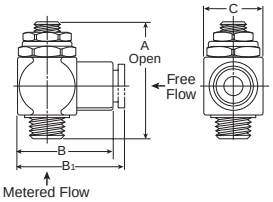

Model Number	Thread (NPT) Male	Thread (NPT) Female	A mm	B mm	C mm	Weight	Cv	
						kg.	Adjusted Flow	Free Flow
03251 0125	1/8	1/8	44	30	17	0.9	0.26	0.20
03251 0250	1/4	1/4	51	36	23	2.0	0.75	0.68
03251 0375	3/8	3/8	58	43	27	3.2	0.84	0.72
03251 0500	1/2	1/2	68	53	32	5.0	1.64	1.41
With Prestolok Fittings								
03251 1215	1/8	5/32	44	30	17	0.9	0.19	0.16
03251 1225	1/8	1/4	44	30	17	0.9	0.28	0.22
03251 2525	1/4	1/4	51	36	23	2.0	0.51	0.44
03251 2538	1/4	3/8	51	36	23	2.0	0.62	0.53
03251 3838	3/8	3/8	58	43	27	3.2	0.78	0.65

CAUTION: If it is possible that the ambient temperature may fall below freezing, the medium must be moisture-free to prevent internal damage or unpredictable behavior.

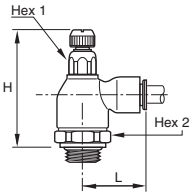

FC705 Push-to-Connect Metal Flow Control

Part No.	Tube Size (In)	NPT	Hex 1 mm	Hex 2 mm	H Closed	H Open	L
FC705-5/32-2	5/32	1/8	19	10	1.79	2.01	0.85
FC705-4-2	1/4	1/8	19	10	1.79	2.01	0.97
FC705-4-4	1/4	1/4	19	10	1.79	2.01	0.97
FC705-6-4	3/8	1/4	19	14	1.91	2.11	1.14
FC705-6-6	3/8	3/8	25	17	2.15	2.40	1.40

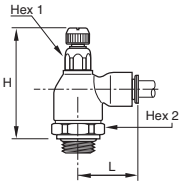

FC701 Push-to-Connect Metal Flow Control - BSPP

Part No.	Tube Size (mm)	BSPP	Hex 1	Hex 2	H Closed	H Open	L
FC701-4M-2G	4	1/8	10	19	47.0	53.0	21.0
FC701-6M-2G	6	1/8	10	19	47.0	53.0	24.5
FC701-6M-4G	6	1/4	10	19	47.5	53.0	24.5
FC701-8M-2G	8	1/8	14	19	50.0	55.0	29.0
FC701-8M-4G	8	1/4	14	19	50.0	56.0	29.0
FC701-8M-6G	8	3/8	17	25	56.0	62.0	30.5
FC701-10M-4G	10	1/4	14	19	50.0	56.0	35.0
FC701-10M-6G	10	3/8	17	25	56.0	62.0	35.0
FC701-12M-6G	12	3/8	17	25	56.0	62.0	38.0
FC701-12M-8G	12	1/2	17	25	55.0	62.0	38.0
FC701-14M-8G	14	1/2	17	25	55.0	62.0	41.0

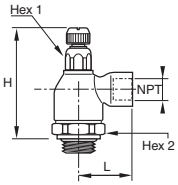

FC708 Threaded Port Meter Out Flow Control

Part No.	NPT	Hex 1 mm	Hex 2 mm	H Closed	H Open	L	L1	L2
FC708-2	1/8	19	10	1.79	2.01	0.89	0.87	1.14
FC708-4	1/4	19	14	1.91	2.11	1.28	0.87	1.28
FC708-6	3/8	25	17	2.15	2.40	1.36	0.91	1.44
FC708-8	1/2	25	17	2.15	2.40	1.50	0.91	1.50

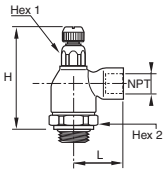

FC702 Threaded Port Metal Flow Control - BSPP

Part No.	BSPP	Hex 1 mm	Hex 2 mm	H Closed	H Open	L
FC702-2G	1/8	10	19	47.0	52.5	22.5
FC702-4G	1/4	14	19	50.5	55.5	32.0
FC702-6G	3/8	17	25	56.0	62.0	34.5
FC702-8G	1/2	17	25	55.0	62.0	37.5

Parker Hannifin Corporation
Pneumatic Division
Richland, Michigan
www.parker.com/pneumatics

Materials of Construction	
Body:	• 32PLCK: Nylon/nickel plated brass • 68PLCK: Nylon body with nickel-plated brass base • VC: Acetal
Gripping Ring:	Stainless Steel
O-Ring:	• Nitrile (32PLCK & 68PLCK) • EPDM (VC)

Nomenclature	
Example: W68PLCK-4-2	**Attribute:**
W	White thread sealant
68	Tube x Pipe
PL	Prestolok
CK	Check Valve
4	1/4 Tube O.D.
2	1/8 Pipe thread

Nomenclature	
Example: A4VC4-MG	**Attribute:**
A	Acetal
4	1/4 Tube O.D.
VC	Valve, Check
4	1/4 Tube O.D.
MG	Metal gripping ring

Applicable Tube	
Tube O.D.	• PLCK: 5/32, 1/4, 5/16, 3/8 • VC: 1/4, 5/16, 3/8
Tube O.D. (mm)	PLCK: 4, 6, 8, 10, 12

Specifications	
Pressure Range:	15 TO 145 PSI
Temperature Ranges:	34°F to 150°F
Cracking Pressure:	• PLCK: 7 PSI • VC: 1/3 PSI
Working Fluid:	Compressed air

These in-line check valves allows air to pass in one direction while blocking flow in the other direction. Their extreme compactness and light weight make them suitable as a safety item in compressed air circuits. The body of the fitting contains an arrow to indicate the direction of flow.

Parker Hannifin Corporation
Pneumatic Division
Richland, Michigan
www.parker.com/pneumatics

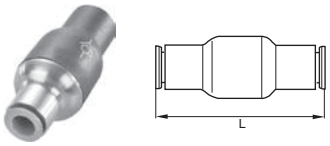

32PLCK In-Line Check Valve

Part No.	Tube Size (In)	L
32PLCK-5/32	5/32	1.52
32PLCK-4	1/4	1.61
32PLCK-5	5/16	2.03
32PLCK-6	3/8	2.50

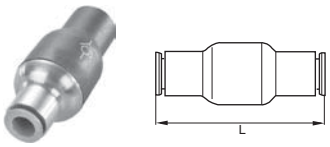

32PLCK In-Line Check Valve

Part No.	Tube Size (mm)	L
32PLCK-4M	4	38.5
32PLCK-6M	6	41.0
32PLCK-8M	8	51.5
32PLCK-10M	10	63.5
32PLCK-12M	12	66.5

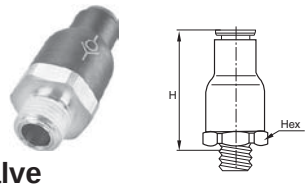

W68PLCK Male Check Valve

Part No.	Tube Size (in)	NPT / UNF	Hex (mm)	H
68PLCK-5/32-0	5/32	10-32	9	1.26
W68PLCK-5/32-2	5/32	1/8	16	1.12
W68PLCK-4-2	1/4	1/8	19	1.42
W68PLCK-4-4	1/4	1/4	19	1.42
W68PLCK-6-4	3/8	1/4	23	1.65
W68PLCK-6-6	3/8	3/8	23	1.65

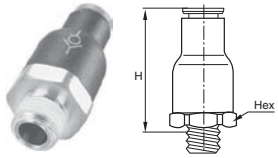

W68PLCKI Male Check Valve Meter In

Part No.	Tube Size (In)	NPT / UNF	Hex (mm)	H
68PLCKI-5/32-0	5/32	10-32	9	1.26
W68PLCKI-5/32-2	5/32	1/8	16	1.12
W68PLCKI-4-2	1/4	1/8	19	1.42
W68PLCKI-4-4	1/4	1/4	19	1.42
W68PLCKI-6-4	3/8	1/4	23	1.65
W68PLCKI-6-6	3/8	3/8	23	1.65

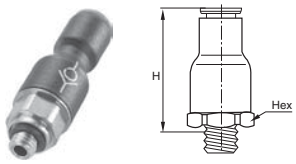

68PLCK Male Check Valve Meter Out - BSPP

Part No.	Tube Size (mm)	BSPP	Hex 1 (mm)	H
68PLCK-4M-M5	4	M5X0.8	9	32.0
68PLCK-4M-2G	4	1/8	16	28.5
68PLCK-6M-2G	6	1/8	16	30.5
68PLCK-6M-4G	6	1/4	16	30.5
68PLCK-8M-2G	8	1/8	19	36.0
68PLCK-8M-4G	8	1/4	19	36.0

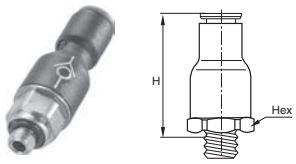

68PLCKI Male Check Valve Meter In - BSPP

Part No.	Tube Size (mm)	BSPP	Hex 1 (mm)	H
68PLCKI-4M-M5	4	M5X0.8	9	32.0
68PLCKI-6M-2G	6	1/8	16	30.5
68PLCKI-8M-2G	8	1/8	19	36.0
68PLCKI-8M-4G	8	1/4	19	36.0
68PLCKI-10M-6G	10	3/8	23	42.0
68PLCKI-12M-6G	12	3/8	23	42.0
68PLCKI-12M-8G	12	1/2	23	44.0

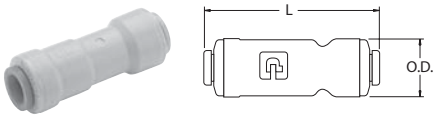

VC – Check Valve

Part No.	Tube Size (In)	L	O.D.
A4VC4-MG	1/4	2.00	.66
A5VC5-MG	5/16	2.10	.70
A6VC6-MG	3/8	2.15	.80

Parker Hannifin Corporation
Pneumatic Division
Richland, Michigan
www.parker.com/pneumatics

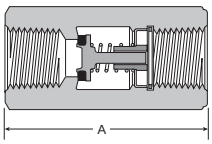

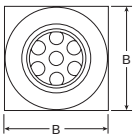

339 Check Valve

Part No.	Port Size	A	B
00339 3000	1/8"	1.22	0.56
00339 3001	1/4"	1.34	0.69
00339 3002	3/8"	2.00	0.88
00339 3003	1/2"	2.56	1.19
00339 3004	3/4"	2.66	1.38

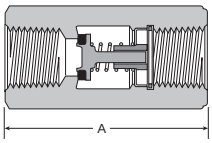

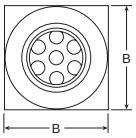

339 Check Valve - BSPP

Part No.	Port Size	A	B
00339G3000	1/8"	1.22	0.56
00339G3001	1/4"	1.34	0.69

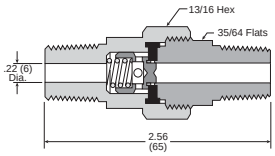

3047 Check Valve

Model Number	Pipe Thread
03047 0099	1/4"

Parker Hannifin Corporation
Pneumatic Division
Richland, Michigan
www.parker.com/pneumatics

Notes

Parker Hannifin Corporation
Pneumatic Division
Richland, Michigan
www.parker.com/pneumatics

Materials of Construction	
Body:	Treated Brass
Gripping Ring:	Stainless Steel
Seals, Diaphragm:	Nitrile

Nomenclature	
Example: FC601-4-2	**Attribute:**
FC	Flow control
6	Blocking
0	Brass body
1	Tube x pipe
4	1/4 Tube O.D.
2	1/8 Pipe thread

Applicable Tube	
Tube O.D.	1/8, 5/32, 1/4, 3/8
Tube O.D. (mm)	4, 6, 8, 10, 12, 14

Specifications	
Pressure Range:	15 to 145 PSI
Temperature Ranges:	-4° to 160°F
Number of Cycles	> 10 million at 68°F and 1 Hz
Leak Rate:	< 3.2 CCM
Working Fluid:	Compressed air

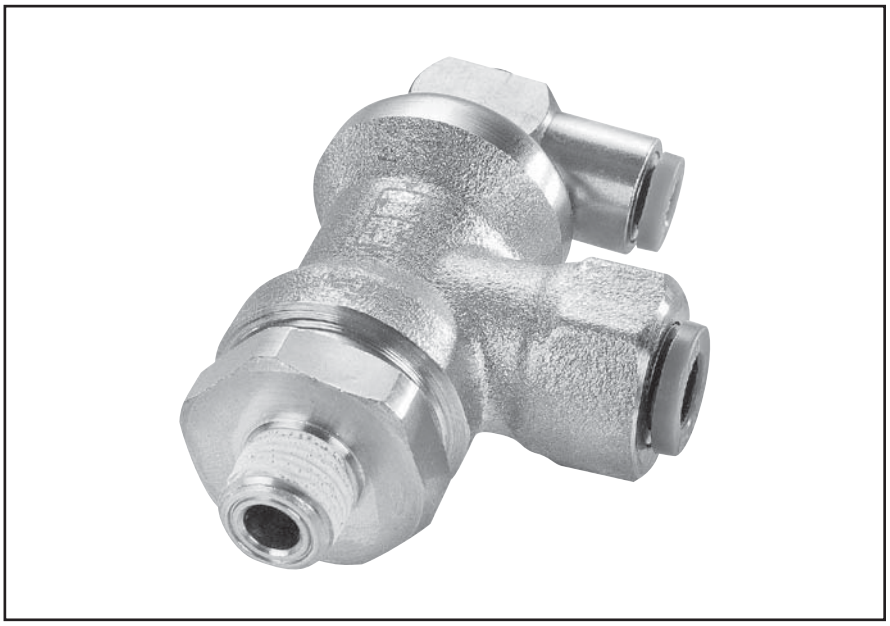

Blocking valves prevents damage to work and equipment in the event of a loss of pressure. Blocking valves which are mounted in pairs on a cylinder lock the piston by simultaneously cutting off the supply and exhaust. Functional locks are more precise and rapid when blocking valves are located on the cylinder: the volume of air in the pipework no longer needs to be taken into consideration.

Parker Hannifin Corporation
Pneumatic Division
Richland, Michigan
www.parker.com/pneumatics

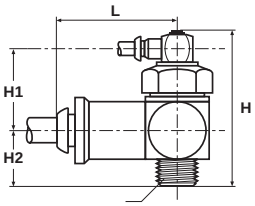

FC601 Push-to-Connect Lock Out Valves

Part No.	Tube Size (in)	NPT	Hex (mm)	H	H1	H2	L
FC601-4-2	1/4	1/8	21	2.03	1.24	0.79	1.10
FC601-4-4	1/4	1/4	21	2.03	1.24	0.79	1.10
FC601-6-6	3/8	3/8	24	2.19	1.14	1.04	1.38
FC601-8-8	1/2	1/2	24	2.19	1.14	1.04	1.69

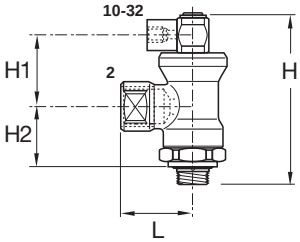

FC602 Threaded Port Lock Out Valves

Part No.	1 NPT	2 NPT	Hex (mm)	H	H1	H2	L
FC602-2	1/4	1/8	21	2.03	1.24	0.79	1.04
FC602-4	1/4	1/4	21	2.03	1.24	0.79	1.04
FC602-6	3/8	3/8	24	2.19	1.14	1.04	1.34
FC602-8	1/2	1/2	24	2.19	1.14	1.04	1.57

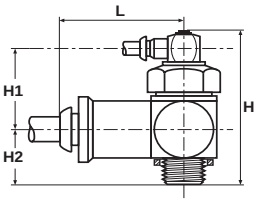

FC601 Push-to-Connect Lock-Out Valve - BSPP

Part No.	Tube Size (mm)	BSPP	Hex 1 (mm)	H	H1	H2	L
FC601-6M-2G	6	1/8	21	53	24.5	21.0	28.0
FC601-6M-4G	6	1/4	21	53	24.5	21.0	28.0
FC601-8M-4G	8	1/4	21	53	24.5	21.0	28.0
FC601-8M-6G	8	3/8	24	56	25.0	23.0	34.5
FC601-10M-6G	10	3/8	24	56	25.0	23.0	35.0
FC601-12M-8G	12	1/2	24	56	25.0	23.0	37.5

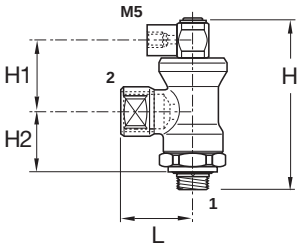

FC608 Threaded Port Lock-Out Valve - BSPP

Part No.	BSPP 1	BSPP 2	Hex 1 (mm)	H	H1	H2	L
FC608-4G-2G	1/8	1/4	21	53	24.5	21.0	28.0
FC608-4G-4G	1/4	1/4	21	53	24.5	21.0	28.0
FC608-6G-6G	3/8	3/8	24	56	25.0	23.0	34.0
FC608-8G-8G	1/2	1/2	24	56	25.0	23.0	41.0

Parker Hannifin Corporation
Pneumatic Division
Richland, Michigan
www.parker.com/pneumatics

Specifications: Models PSBJ, PSPJ	
Working Temperature:	5° to 140°F
Working Pressure:	45 to 115 PSI
Breaking Pressure:	8.5 PSI
Response Time:	3 Ms

Specifications: Model PSPE	
Working Pressure:	45 to 115 PSI
Breaking Pressure:	7 PSI
Current Rating:	5A / 250VAC - 5W / 48VDC

UL Listed Component	
Reset Pressure:	10 PSI

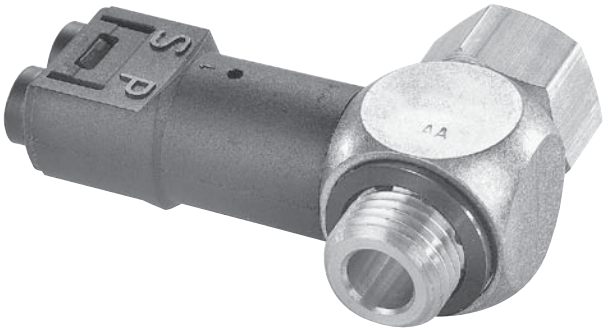

The sensor fitting detects the absence of pressure and translates it to a high pressure pneumatic output. When used to monitor the decaying or exhausting side of a pneumatic cylinder's piston, it emits a positive output. When the cylinder comes to the end of its stroke, wherever that may be, the signal emitted from the sensor can then be used to pilot the next step.

Parker Hannifin Corporation
Pneumatic Division
Richland, Michigan
www.parker.com/pneumatics

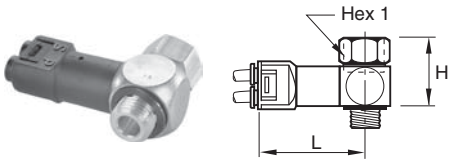

PSBJ731 Pneumatic Threshold Sensor - 5/32 Pilot

Part No.	NPT / UNF	Hex (mm)	H	L
PSBJ731-0	10-32	5/16	0.62	1.70
PSBJ731-2	1/8	9/16	0.90	1.74
PSBJ731-4	1/4	5/8	1.09	1.81
PSBJ731-6	3/8	7/8	1.13	1.91
PSBJ731-8	1/2	1	1.17	2.05

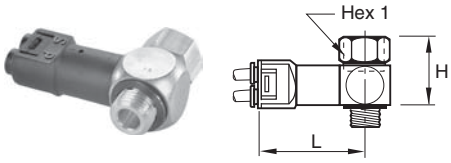

PSBJ731 Pneumatic Threshold Sensor - 4mm Pilot

Part No.	BSPP	Hex 1 (mm)	H	L
PSBJ731-M5	M5X0.8	8	16	43.5
PSBJ731-2G	1/8	14	23	44.5
PSBJ731-4G	1/4	17	28	46.5
PSBJ731-6G	3/8	22	29	49.0
PSBJ731-8G	1/2	27	30	52.5

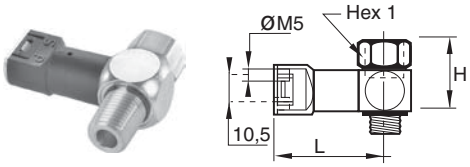

PSPJ731 Pneumatic Threshold Sensor - 10-32 Pilot

Part No.	NPT	Hex 1 (mm)	H	L
PSPJ731-2	1/8	9/16	0.90	1.58
PSPJ731-4	1/4	5/8	1.09	1.66
PSPJ731-6	3/8	7/8	1.13	1.76

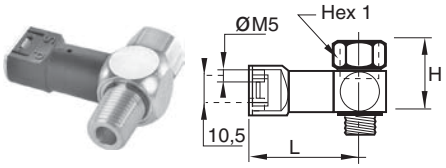

PSBJ708 Pneumatic Threshold Sensor - M5 Pilot

Part No.	BSPP	Hex 1 (mm)	H	L
PSBJ708-2G	1/8	14	23	40.5
PSBJ708-4G	1/4	17	28	42.5

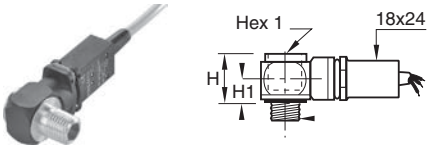

PSPE701 Pneumatic / Electric Threshold Sensor - BSPP

Part No.	BSPP	Hex 1 (mm)	H	H1	L
PSPE701-M5	M5X0.8	8	20	10	49
PSPE701-2G	1/8	6	20	10	52
PSPE701-4G	1/4	8	20	10	54
PSPE701-6G	3/8	10	22	12	57
PSPE701-8G	1/2	12	26	14	58

Parker Hannifin Corporation
Pneumatic Division
Richland, Michigan
www.parker.com/pneumatics

Notes

Parker Hannifin Corporation
Pneumatic Division
Richland, Michigan
www.parker.com/pneumatics

Accessories

Section J

www.parker.com/accessories

Tank Valves & Air Chucks.....J2
EM Series Exhaust Mufflers.....J3
Muffler / Flow Controls J3
Breather Vents.....J4
ES Series Silencer J4
ASN Air Line Silencer.....J5
P6M Air Line Silencer J6
Muffler-Reclassifier ECS J7
Automatic Drip Leg Drain & Relief Valve.....J8
Relief Valves - Diaphragm Type.....J9
Shuttle Valves & Quick Exhaust J10-J12
Pressure Switches.....J13-J15
Drain Valves.....J16-J17
Safety Blow Guns.....J18-J20

Parker Hannifin Corporation
Pneumatic Division
Richland, Michigan
www.parker.com/pneumatics

Tank Valves

For tanks, steel barrels, compressors and other pneumatic containers where a dependable automatic air valve is needed. Equipped with standard valve core and sealing cap. Maximum operating pressure is 185 PSIG. Temperature range is -40°F to 220°F.

Model No. 09166 0060

Has a 1/8" pipe thread at bottom for minimum protrusion. N/P finish, dome shaped cap.
Packed 25 to a box.

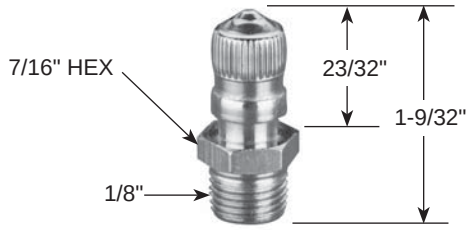

Model No. 00645 0060

A 1/8" pipe thread at bottom permits maximum protrusion. N/P finish, screwdriver type cap.
Packed 25 to a box.

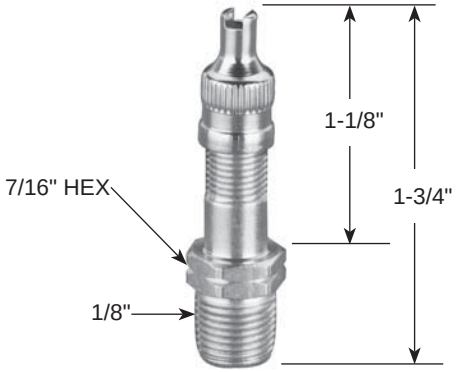

Model No. 01468 0006

Has a 1/8" pipe thread part way up the stem which allows for minimum protrusion. N/P finish, has screwdriver type cap.
Packed 25 to a box.

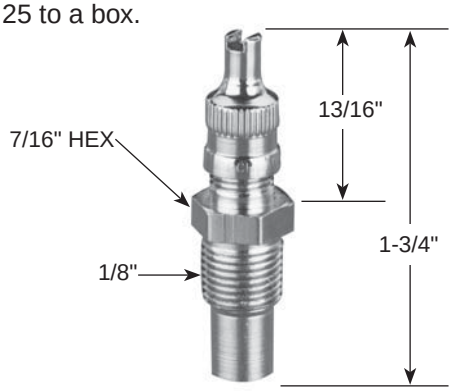

Air Chucks

For regular airlines.

Model No. 05499 0000

Ball-foot air chuck, 1/4" female port.
Packed 10 to a box.

Model No. 06739 0000

Ball-foot air chuck with clip. Fits standard valve mouth. Saves holding on by hand. Has 1/4" port for connecting to hose.
Packed 10 to a box.

Parker Hannifin Corporation
Pneumatic Division
Richland, Michigan
www.parker.com/pneumatics

EM Series – Sintered Bronze Muffler / Filters

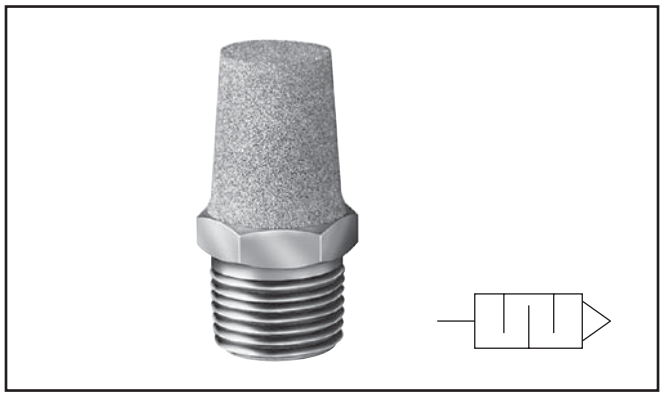

General Description

Muffler / filters effectively reduce air exhaust noises to an industry accepted level with minimum flow restriction. They protect valves, impact wrenches, screw drivers and other air tools by preventing dirt and other foreign matter from entering the system. Non-corrosive. Can be cleaned with many common solvents.

Specifications

Maximum Operating Pressure.....250 PSIG (Air)

Operating Temperature ..... 0° to 300°F*

* Ambient temperatures below freezing require moisture-free air. Ambient temperatures below freezing and above 180° require lubricants especially selected for suitability at these temperatures. Pneumatic valves should be used with filtered and lubricated air.

Model Number	Pipe Thread	Overall Length	Hex Size
EM12	1/8"	1.00	7/16"
EM25	1/4"	1.32	9/16"
EM37	3/8"	1.54	11/16"
EM50	1/2"	1.85	7/8"
EM75	3/4"	2.29	1-1/6"
EM100	1"	2.91	1-5/16"
EM125	1-1/4"	3.25	1-11/16"
EM150	1-1/2"	3.69	2"

Muffler / Flow Controls

General Description

Muffler / flow controls provide an acceptable exhaust noise level and effectively meter exhaust. Installed in valve exhaust ports, they control cylinder piston speeds throughout a wide range. The adjusting screw cannot be accidently blown out, can be locked to maintain setting. Brass and bronze construction. Clean with commonly used solvents.

Specifications

Maximum Operating Pressure.....250 PSIG (Air)

Operating Temperature ..... 0° to 300°F*

* Ambient temperatures below freezing require moisture-free air. Ambient temperatures below freezing and above 180° require lubricants especially selected for suitability at these temperatures. Pneumatic valves should be used with filtered and lubricated air.

Model Number	Pipe Thread	Overall Length	Hex Size
04502 0002	1/8"	1.15	9/16"
04504 0004	1/4"	1.42	1/2"
04506 0060	3/8"	1.49	11/16"
04508 0080	1/2"	1.77	7/8"
04512 0012	3/4"	1.98	1-1/16"
04516 0016	1"	2.15	1-5/16"

Parker Hannifin Corporation
Pneumatic Division
Richland, Michigan
www.parker.com/pneumatics

Breather Vents

NOTE: Breather vents should not be used as exhaust mufflers.

General Description

These low silhouette versions of the muffler / filter are useful where space is a problem and / or to prevent contamination. Use for vacuum relief or pressure equalization in gear boxes, oil tanks, reservoirs, etc. Non-corrosive.

Specifications

Maximum Operating Pressure.....150 PSIG (Air)

Operating Temperature ..... 0° to 300°F*

* Ambient temperatures below freezing require moisture-free air. Ambient temperatures below freezing and above 180° require lubricants especially selected for suitability at these temperatures. Pneumatic valves should be used with filtered and lubricated air.

Model Number	Pipe Thread	Overall Length	Hex Size
04702 0002	1/8"	0.44	7/16"
04704 0004	1/4"	0.63	9/16"
04706 0006	3/8"	0.75	11/16"
04708 0008	1/2"	0.88	7/8"
04712 0012	3/4"	1.00	1-1/6"
04716 0016	1"	1.31	1-5/16"
04720 0020	1-1/4"	1.41	1-11/16"
04724 0024	1-1/2"	1.50	2"

ES Series – Silencer

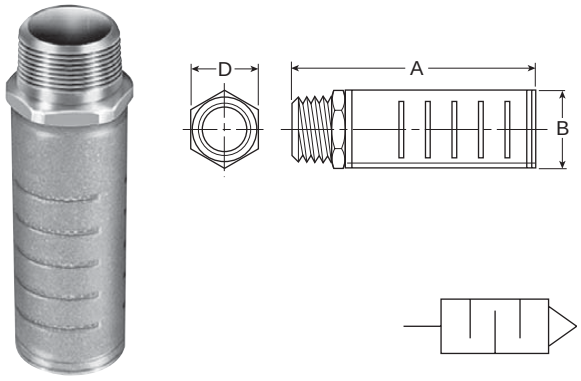

General Description

These low silhouette versions of the muffler / filter are useful where space is a problem and / or to prevent contamination. Use for vacuum relief or pressure equalization in gear boxes, oil tanks, reservoirs, etc. Non-corrosive.

The silencer is designed to give superior performance in noise control with a minimum effect on air efficiency. “Trimline” design allows location in the tightest places without extra plumbing and fittings. Fits directly into the exhaust port of more than 90% of present commercial valves. Slotted body permits rapid discharge of air without undesirable back pressure. Unique nylon screen element resists dirt buildup or clogging.

Specifications

Maximum Operating Pressure.....250 PSIG (Air)

Operating Temperature ..... 0° to 300°F*

* Ambient temperatures below freezing require moisture-free air. Ambient temperatures below freezing and above 180° require lubricants especially selected for suitability at these temperatures. Pneumatic valves should be used with filtered and lubricated air.

Model Numbers		Pipe Thread	Flow SCFM @ 100 PSIG Inlet	Dimensions		
NPTF	BSPT (R)			A	B	D
ES12MC	**ESB12MC**	1/8"	115	1.85	0.81	0.63
ES25MC	**ESB25MC**	1/4"	129	1.85	0.81	0.63
ES37MC	**ESB37MC**	3/8"	219	3.31	1.26	1.00
ES50MC	**ESB50MC**	1/2"	549	3.31	1.26	1.00
ES75MC	**ESB75MC**	3/4"	893	4.56	2.01	1.62
ES100MC	**ESB100MC**	1"	1,013	4.56	2.01	1.62
ES125MC	**ESB125MC**	1-1/4"	1,486	5.69	2.88	—
ES150MC	**ESB150MC**	1-1/2"	1,580	5.69	2.88	—

Parker Hannifin Corporation
Pneumatic Division
Richland, Michigan
www.parker.com/pneumatics

Air Line Silencer – Plastic

ASN Series – M5, 1/8", 1/4", 3/8" & 1/2"

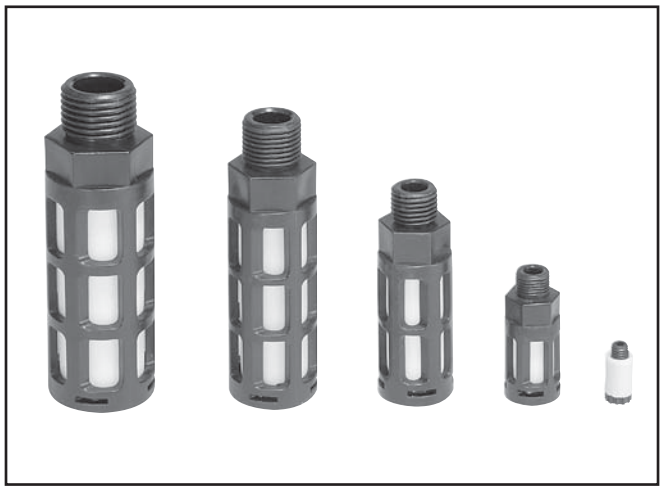

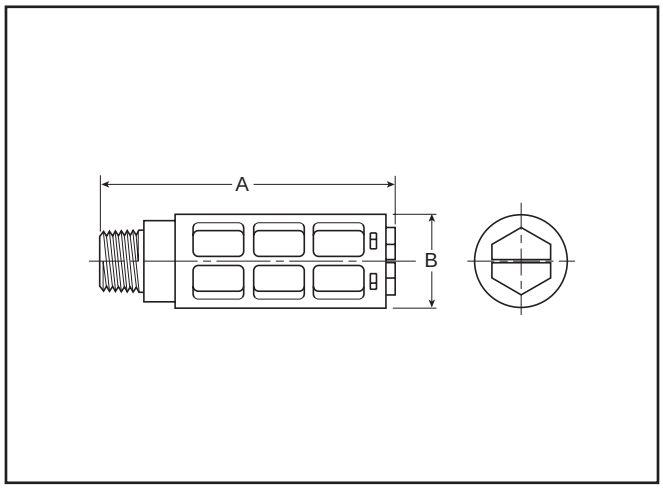

Features

- Compact
- Lightweight
- Easy to Install
- Excellent Noise Reduction
- Protects Components from Contamination
- NPT and BSPT Threads Available

Part Number		Thread Size	A (mm)	B (mm)	Maximum Flow (SCFM) 100 PSIG Inlet	Sound Pressure Level (dBA)	
NPT	BSPT					20 PSIG Inlet	100 PSIG Inlet
AS-5		M5	0.43 (11)	0.32 (8)	15	69	79
ASN-6	AS-6	1/8"	1.57 (40)	0.63 (16)	51	69	81
ASN-8	AS-8	1/4"	2.56 (65)	0.83 (21)	124	67	84
ASN-10	AS-10	3/8"	3.35 (85)	0.98 (25)	247	83	98
ASN-15	AS-15	1/2"	3.74 (95)	1.18 (30)	370	69	96

Application

The plastic silencer is designed to give excellent noise reduction with a minimum effect on air efficiency. The "Trimline" design allows for locating the silencer in the tightest places without extra plumbing or fittings. Fits directly into the exhaust port of most commercial valves. Open surface area of element allows for rapid discharge of air without undesirable back pressure.

Specifications

Pressure Rating.....0 to 150 PSIG (0 to 10 bar, 0 to 1034 kPa)

Temperature Rating .....14°F to 140°F (-10°C to 60°C)

Body .....Acetal (Plastic)

Element ..... Polyethylene

Parker Hannifin Corporation
Pneumatic Division
Richland, Michigan
www.parker.com/pneumatics

Air Line Silencer – Plastic

P6M Series – G Threads

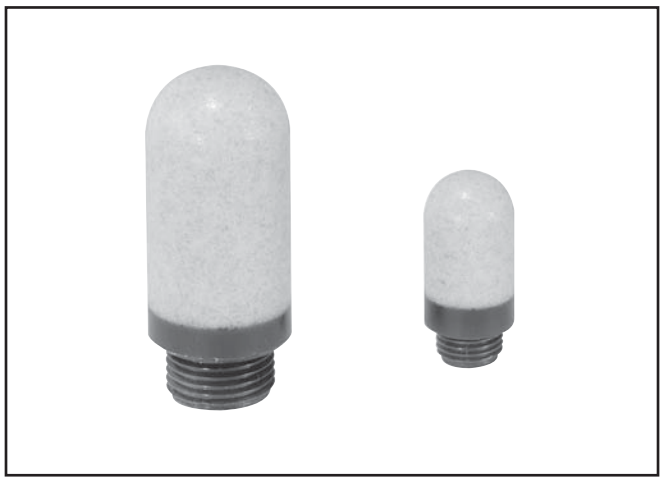

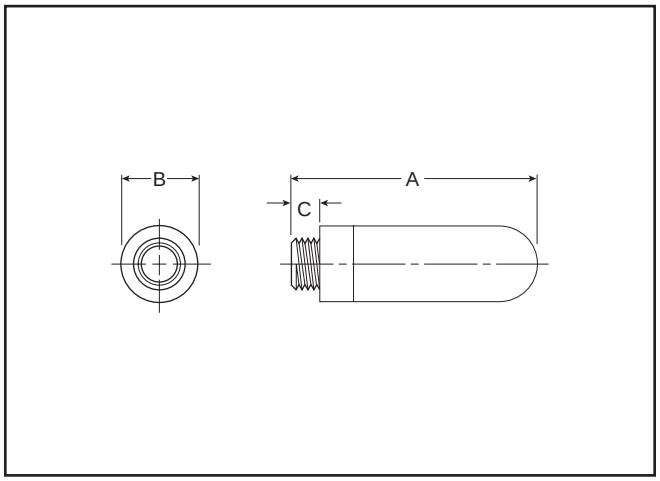

Features

- All Plastic Ultra Light Weight Versions
- High Noise Level Reduction
- Low Back Pressure Generation

Application

The plastic silencer is designed to give excellent noise reduction with a minimum effect on air efficiency. The "Trimline" design allows for locating the silencer in the tightest places without extra plumbing or fittings. Fits directly into the exhaust port of most commercial valves. Open surface area of element allows for rapid discharge of air without undesirable back pressure.

Part Number	Port Thread	A	Diameter B	C	Weight (grams)
P6M-PAC5	M5	0.91 (23)	0.26 (6,5)	0.16 (4)	0.01
P6M-PAB1	G1/8	1.14 (29)	0.55 (14)	0.24 (6)	0.02
P6M-PAB2	G1/4	1.34 (34)	0.67 (17)	0.24 (6)	0.04
P6M-PAB3	G3/8	2.36 (60)	0.98 (25)	0.35 (9)	0.06
P6M-PAB4	G1/2	2.52 (64)	0.98 (25)	0.43 (11)	0.10
P6M-PAB6	G3/4	5.51 (140)	1.50 (38)	0.55 (14)	0.50
P6M-PAB8	G1	6.30 (160)	1.89 (48)	0.79 (20)	0.62

Specifications

Pressure Rating..... 0 to 246 PSIG
(0 to 17 bar, 0 to 1700 kPa)

Temperature Rating

Plastic .....14°F to 176 °F (-10°C to 80°C)
Metal.....14°F to 165 °F (-10°C to 74°C)

Efficiency 92%

Parker Hannifin Corporation
Pneumatic Division
Richland, Michigan
www.parker.com/pneumatics

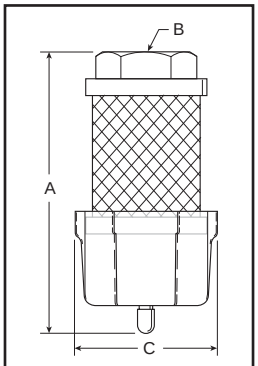

Dimensions:

Model	A	B	C
ECS3	5.30 (135 mm)	1/2" NPT	2.57 (65 mm)
ECS5	7.30 (185mm)	1" NPT	2.57 (65mm)

Performance Characteristics

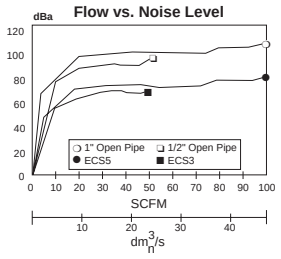

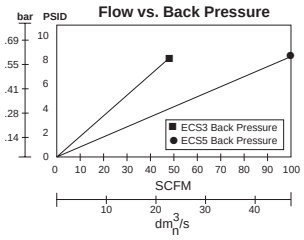

Features

The ECS (Muffler-Reclassifier) eliminates unwanted oil mist and reduces exhaust noise from pneumatic valves, cylinders and air motors.

- 99.97% Oil Removal Efficiencies
- 25 dBA Noise Attenuation
- 1/2" NPT and 1" NPT
- Disposable Units
- Continuous or Plugged Drain Option
- Metal Retained Construction
- Fast Exhaust Time

Improve Overall Plant Environment

Exhaust oil mist and noise pollution have a direct impact on worker productivity.

Oil aerosol mist from lubricators and compressors is pervasive and enters the industrial plant environment through the exhaust ports of valves, cylinders and air motors. This rapidly expanding exhaust also produces sudden and excessive noise.

The ECS (Muffler-Reclassifier) is 99.97% efficient at removing the oil aerosols. The ECS also acts as a silencer to lower the dBA levels below O.S.H.A. requirements.

The result is a cleaner, quieter environment which equates to greater work productivity and safety.

Operation

Compressor oils and lubricating oils are exhausted from valves, cylinders and air motors into the ECS. Oil aerosols are “coalesced” into larger droplets and gravity pulls them into the attached drain sump. The sump can then be drained manually or by using a 1/4" ID plastic tube drain. The air flowing into the ECS is also muffled or silenced as it enters the inside of the ECS and passes through the filter media into the atmosphere.

Proven Technology

The ECS units are constructed from the same materials that go into our oil removal coalescing filter elements.

The seamless design insures media uniformity and strength. This proven technology provides high coalescing efficiency with low pressure drop.

The filter media is supported by cylindrical perforated steel retainers both inside and out. These retainers, fully plated for excellent corrosion resistance, give the ECS units high rupture strength in either flow direction. These filters can also be used as high efficiency inlet or bypass filters for vacuum pumps, or breather elements to protect the air above critical process liquids.

ECS3 / ECS5

The ECS solves two problems inherent in compressed air exhaust from valves, cylinders and air motors - oil mist removal and noise abatement.

The ECS will improve your industrial plant environment, thereby improving worker productivity.

Specifications

Maximum Operating Temperature ..... 125°F (52°C)

Maximum Line Pressure..... 100 PSIG (6.8 bar)

Ordering Information

ECS	3	*

Size
3 1/2 inch
5 1 Inch

Engineering Level
* Will be entered at factory.

Parker Hannifin Corporation
Pneumatic Division
Richland, Michigan
www.parker.com/pneumatics

Automatic Drip Leg Drain

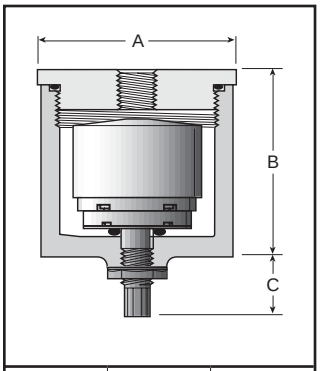

A	B	C
2.50	2.37	0.87
64 mm	60 mm	22 mm

Features

- Auto Drain Ported 1/8" to Pipe Away Liquid.
- Drain has Manual Override
- Easily Serviced without Tool
- 20-250 PSIG Range
- Compact Size

Specifications

Housing & Cap.....Aluminum

Port Threads..... 1/4" - 1/2" Top
1/8" Drain

Pressure and Temperature Ratings:
Metal Bowl..... 20 to 250 PSIG (0 to 17.2 bar)
32°F to 175°F (0°C to 80°C)

Seals.....Buna N

Ordering Information

Consists of Drip Leg Drain Housing WITH Auto Drain.

Model No.	Size
06D1NA	1/4"
06D3NA	1/2"

Relief Valve

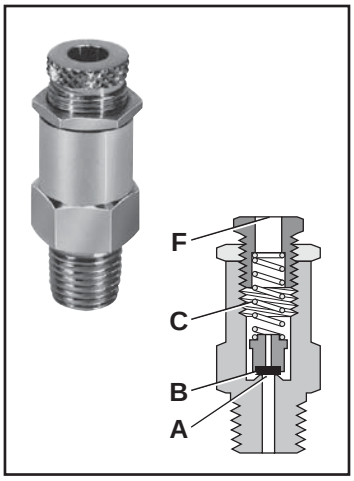

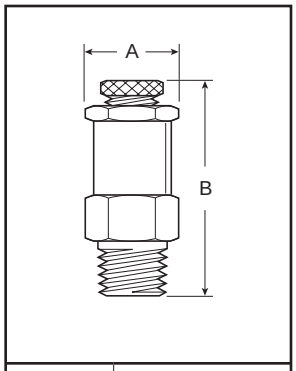

A	B
0.75 Hex	1.88 - 2.25
19 mm	47.8 - 57.2 mm

Features

- Large Relief Capacity (70.39 SCFM @ 150 PSI when fully opened) in a Compact Size
- Lightweight Aluminum Construction with Resilient Seat

Application

The RV01A1N Pop Off Relief Valve is designed to protect against excessive pressure buildup in a pneumatic circuit or system.

Operation*

With the relief valve mounted in a reservoir or system, the force of system pressure at **(A)** is offset by the force of spring **(C)** acting on poppet seat **(B)**. At pressures lower than the setting, the poppet seat **(B)** is held against the body at **(A)** effecting a seal. As pressure approaches set point, the poppet begins to vent until set point is reached, at which time the poppet seat **(B)** lifts off the body at **(A)** allowing the excess pressure to vent to atmosphere at **(F)**. When the excess pressure has been vented, the spring **(C)** acts on the poppet seat **(B)** forcing it to seat on the body at **(A)**, sealing off the flow of air.

Specification

Body & Adjusting Screw .....Aluminum
Locking Nut .....Steel
Seat.....Nitrile
Spring.....Steel
Poppet..... Plastic
Operating Temperature .....32°F to 200°F (0°C to 93°C)
Port Threads..... 1/4 Inch Male
Relief Range ..... 10 to 200 PSIG (.7 to 14 bar)
with standard spring.

* Ref: 1RV100B Installation & Service Instructions

Ordering Information

RV01A1N **XXX** [ ]

10 -200 PSI

Seals

Blank **BUNA**
V Flurocarbon

Parker Hannifin Corporation
Pneumatic Division
Richland, Michigan
www.parker.com/pneumatics

130 Relief Valve

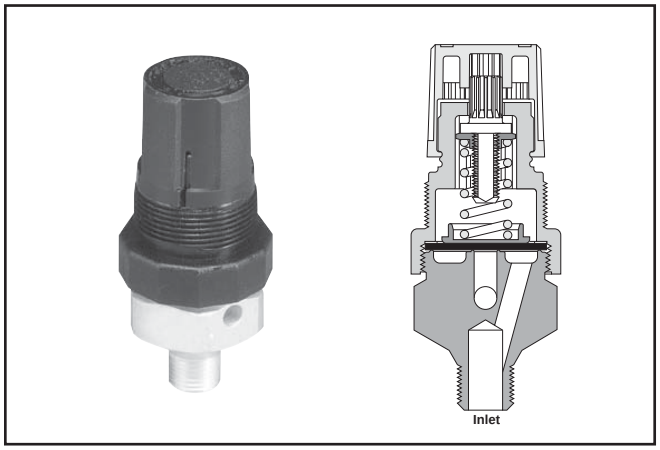

Features

- Compact, Sensitive Diaphragm-type Relief Valve
- Push-pull, Locking Knob
- Knob and Top Work the Same as a Miniature Regulator
- 130 has Lightweight Aluminum Construction
- 134 has a brass body, captured exhaust and is an Inline Type with 3 Inlet Ports and 1 Outlet Port

Applications

- Designed to Protect Against Excessive Pressure Buildup in a Pneumatic Circuit or System
- For Use where Gradual Proportional Relief is Required

Operation

- Turn relief valve knob clockwise for maximum pressure.
- Set pressure going into relief valve at desired pressure.
- Turn relief valve knob counter-clockwise until exhaust starts to bleed.
- Turn relief valve knob clockwise until exhaust stops bleeding. Push to lock knob.

Ordering Information

Relief Valve	Spring Range			
	0-15 PSIG	0-25 PSIG	0-50 PSIG	0-100 PSIG
130	130-02AA 130-02AAP*	130-02A 130-02AP*	130-02B 130-02BP*	130-02C 130-02CP*
134	134-02AA 134-02AAP*	134-02A 134-02AP*	134-02B 134-02BP*	134-02C 134-02CP*

* Panel mount nut included.

134 Relief Valve

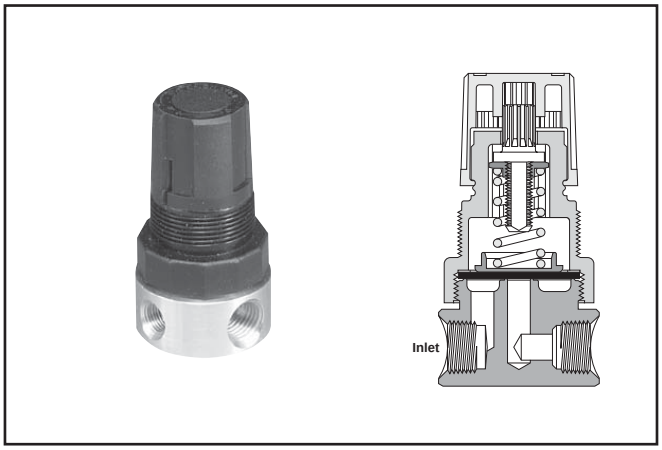

Dimensions

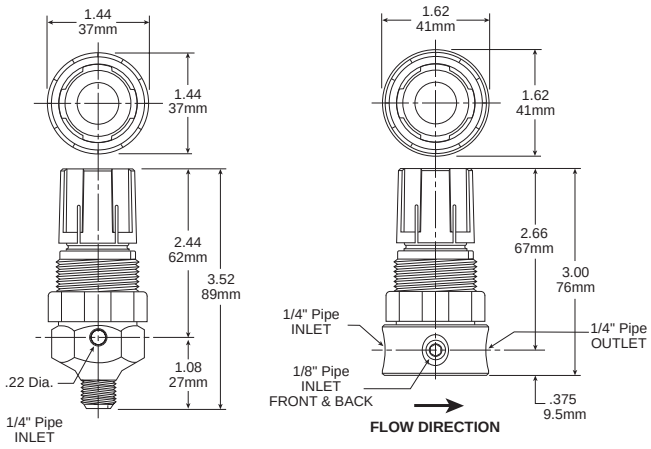

130 **134**

Relief Valve Kits

Bonnet Assembly Kit PCKR364Y
Panel Mount Nut PR05X51

Specifications

Relief Range ..... 0 to 100 PSIG (0 to 6.9 bar)
Maximum Inlet Pressure ..... 300 PSIG (20.7 bar)
Operating Temperature ..... 40°F to 120°F (4°C to 49°C)
Port Threads:
130 ..... 1/4" Pipe Male Only
134 ..... Inlet Port – Two 1/8" & One 1/4" Pipe
Outlet Port – 1/4" Pipe

Materials of Construction

Adjusting Knob ..... Polypropylene
Adjusting Screw ..... Zinc-plated Steel
Body ..... Aluminum (130); Brass (134)
Diaphragm / Disc ..... Buna-N
Nut ..... Chromated Steel
Spring Cage ..... Acetal
Spring ..... Zinc-plated Steel

Parker Hannifin Corporation
Pneumatic Division
Richland, Michigan
www.parker.com/pneumatics

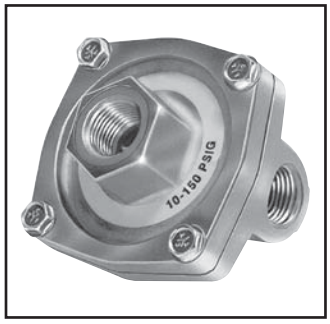

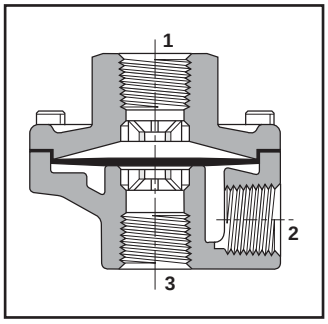

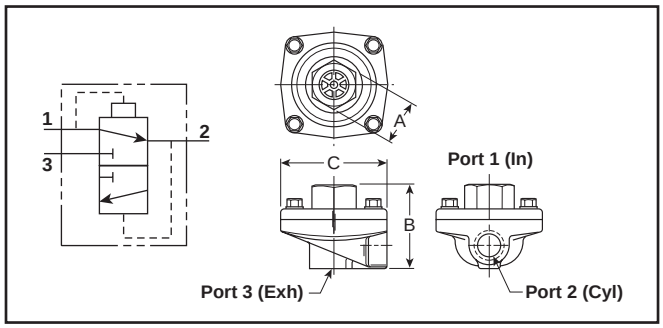

General Information

Quick exhaust valves provide rapid exhaust of control air when placed between control valve and actuator. They can also be used as shuttle valves. Diaphragm materials are available in urethane, Nitrile, Fluorocarbon, and PTFE to meet a wide variety of operating conditions.

Valve Specifications

Operating Pressure (Air)

Maximum:
150 PSIG
200 PSIG for Model No. 0R37TB (PTFE diaphragm)

Minimum:
3 PSIG
50 PSIG for Model No. 0R37TB (PTFE diaphragm)

Operating Temperature:
Urethane: 0°F to 180°F* (-18°C to 80°C)
Nitrile: 0°F to 180°F* (-18°C to 80°C)
Fluorocarbon: 0°F to 400°F* (-18°C to 205°C)
PTFE: 0°F to 500°F* (-18°C to 260°C)

* Ambient temperatures below freezing require moisture-free air. Ambient temperatures below freezing and above 180° require lubricants especially selected for suitability at these temperatures. Pneumatic valves should be used with filtered and lubricated air.

Component Materials

Body Material..... Die cast aluminum

Static Seals.....Nitrile standard with urethane (Others see below)

Diaphragm ..... Standard – Urethane
Optional – Fluorocarbon, PTFE, or Nitrile (Depending on size)

Mounting Bracket Kit – No. 03640 8100

(Including body screws)

For “0R12” and “0R25” sizes with 7/8" “A” Dimension.

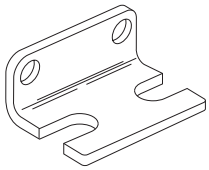

Model Selection, Performance Data and Dimensions

Port 1	Port 2	Port 3	Flow (SCFM†)	Model Number NPTF	Model Number BSPP “G”	A	B	C	Service Kit No.
STANDARD URETHANE DIAPHRAGMS (Nitrile static seals)									
1/4"	1/4"	3/8"	150	**0R25NB**	0RB25NB	1" Hex	2.06	2.44	03340 0105
	3/8"	3/8"	240	**0R25PB**	—	1" Hex	2.06	2.44	03340 0105
3/8"	3/8"	3/8"	240	**0R37B**	0RB37B	1" Hex	2.06	2.44	03340 0105
1/2"	1/2"	1/2"	450	**0R50B**	0RB50B	1-1/2" Hex	2.88	3.38	03475 0109
3/4"	3/4"	3/4"	550	**0R75B**	0RB75B	1-1/2" Hex	2.88	3.38	03475 0109
NITRILE DIAPHRAGMS (Nitrile static seals)									
1/8"	1/8"	1/8"	70	**0R12B**	0RB12B	7/8" Sq.	1.75	1.88	03640 8000
	1/8"	1/4"	70	**0R12NB**	0RB12NB	7/8" Sq.	1.75	1.88	03640 8000
1/4"	1/4"	1/4"	90	**0R25B**	0RB25B	7/8" Sq.	1.75	1.88	03640 8000
	1/4"	3/8"	90	0R25NFB	0RB25NFB	7/8" Sq.	1.75	1.88	03340 8000
3/8"	3/8"	3/8"	240	0R37FB	0RB37FB	1" Hex	2.06	2.44	03340 8000
3/4"	3/4"	3/4"	550	0R75FB	0RB75FB	1-1/2" Hex	2.88	3.38	03475 9000
FLUOROCARBON DIAPHRAGMS for extended temperature operation (Fluorocarbon static seals)									
1/8"	1/8"	1/8"	70	0R12VB	0RB12VB	7/8" Sq.	1.75	1.88	03650 8000
	1/8"	1/4"	70	0R12NVB	0RB12NVB	7/8" Sq.	1.75	1.88	03650 8000
1/4"	1/4"	1/4"	90	0R25VB	0RB25VB	7/8" Sq.	1.75	1.88	03650 8000
3/8"	3/8"	3/8"	240	0R37VB	0RB37VB	1" Hex	2.06	2.44	03340 0319
1/2"	1/2"	1/2"	450	0R50VB	0RB50VB	1-1/2" Hex	2.88	3.38	03475 0120
3/4"	3/4"	3/4"	550	0R75VB	0RB75VB	1-1/2" Hex	2.88	3.38	03475 0120
PTFE DIAPHRAGMS for higher pressure and temperature (Fibre static seals)									
3/8"	3/8"	3/8"	240	0R37TB	0RB37TB	1" Hex	2.06	2.44	03340 0504

† At 100 PSIG inlet pressure with full pressure drop.

BOLD ITEMS ARE MOST POPULAR.

Parker Hannifin Corporation
Pneumatic Division
Richland, Michigan
www.parker.com/pneumatics

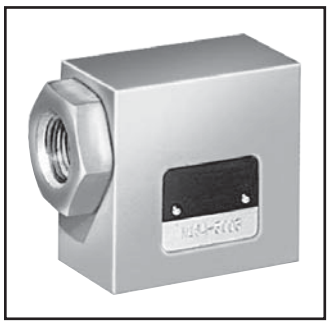

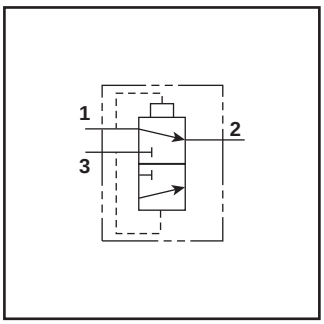

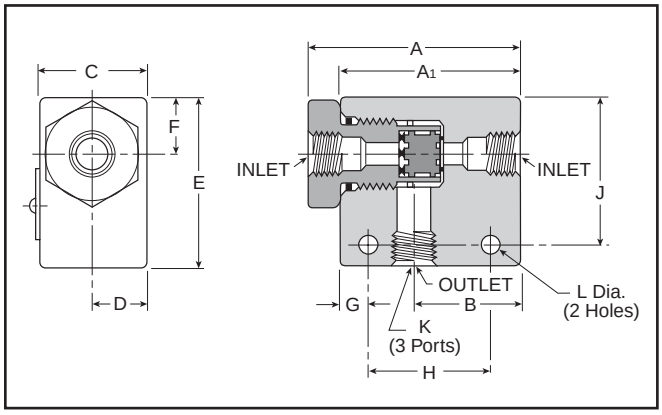

General Information

Shuttle valves determine a single pneumatic output from two separate inputs. If pressure is applied to both ports simultaneously, the valve will select the port with the higher pressure.

Valve Specifications

Maximum Operating Pressure.....200 PSIG Maximum
3 PSIG Minimum: Differential Pressure

Operating Temperature .....0° to 160°F*

* Ambient temperatures below freezing require moisture-free air. Ambient temperatures below freezing and above 180° require lubricants especially selected for suitability at these temperatures. Pneumatic valves should be used with filtered and lubricated air.

Component Materials

Body Material.....Aluminum
Internal Components..... Aluminum
Seals.....Nitrile

Model Selection and Dimensions

Model Number	Port Size	Dimensions											
		A	A1	B	C	D	E	F	G	H	J	K	L
N164 1001	1/8"	N/A	1.62	0.81	0.62	0.31	1.00	0.281	0.312	1.00	0.75	1/8 - 27	0.219
N164 2003	1/4"	2.50	2.12	1.25	1.25	0.62	2.00	0.67	0.265	1.25	1.35	1/4 - 18	0.219
N164 3003	3/8"	2.50	2.12	1.25	1.25	0.62	2.00	0.67	0.265	1.25	1.35	3/8 - 16	0.219

Performance Data – Flow

Model Number	Port Size	Flow (Cv)
N164 1001	1/8"	0.32
N164 2003	1/4"	1.65
N164 3003	3/8"	2.02

Parker Hannifin Corporation
Pneumatic Division
Richland, Michigan
www.parker.com/pneumatics

Typical "Quick Exhaust Valve" Applications

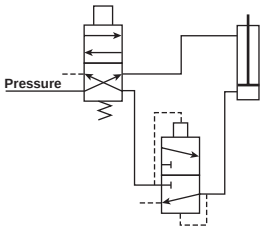

Rapid Retraction – Double Acting Cylinder

In this circuit, air is exhausted through a Quick Exhaust Valve that is **close coupled** to the cap end of the cylinder. Because the Quick Exhaust Valve has a greater exhaust capacity than the four-way Control Valve, increased cylinder speed can be accomplished with a smaller and less expensive control valve.

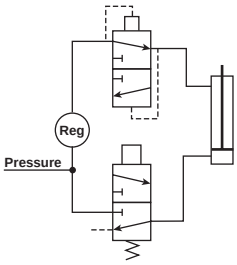

Dual Pressure Actuation of Double Acting Cylinder

This circuit utilizes a Quick Exhaust Valve and a three-way Control Valve to permit rapid extension of the cylinder at a high pressure. nder life.

NOTE: Line pressure must be 3 or 4 times greater than rod end pressure. Effective working pressure is the differential between the cap and rod end.

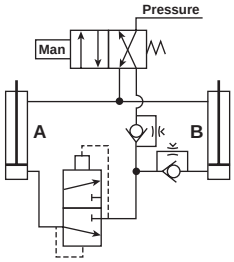

Bi-Directional Control of Two Double Acting Cylinders

This circuit provides maximum control with a minimum of valving. A large four-way Control Valve is not needed to permit the rapid retraction of Cylinder A, as the Quick Exhaust Valve performs this function. The extension of Cylinders A and B and retraction of Cylinder B are controlled by Speed Control Valves.

Typical "Shuttle Valve" Applications

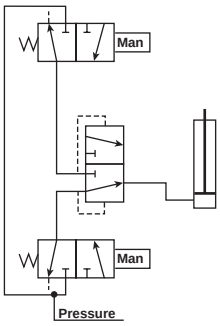

"OR" Circuit

The most common application of the Shuttle Valve is the "OR" Circuit. Here a cylinder or other work device can be actuated by either control valve. The valves can be manually or electrically actuated and located in any position.

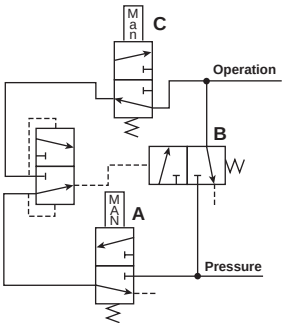

Memory Circuit

This circuit enables continuous operation once initiated. Pressure is delivered to the circuit when Valve A is actuated. This allows pressure to pass through the shuttle valve actuating Valve B. Pressure then flows through Valve B and also the other side of the shuttle valve which holds Valve B open for continuous operation. To unlock the circuit, Valve C must be opened to exhaust the circuit and allow Valve B to return to its normally closed position.

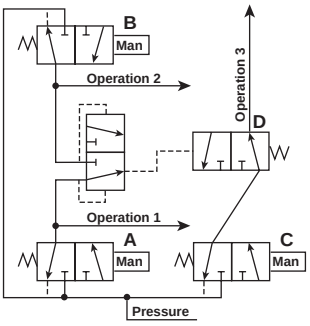

Interlock

This circuit prevents the occurrence of a specific operation while one or another operation takes place. When either Valve A or B is actuated to perform operation 1 or 2, Valve D is shifted to the closed position and prevents operation 3 from occurring.

Parker Hannifin Corporation
Pneumatic Division
Richland, Michigan
www.parker.com/pneumatics

Pressure Switch – P01909

Air Line Accessories

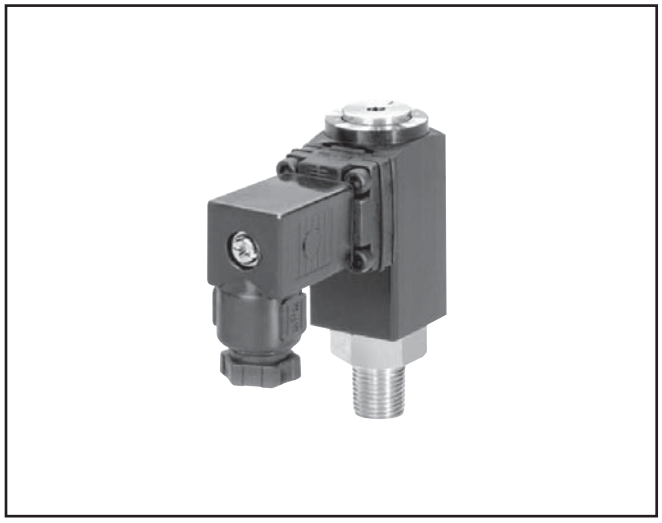

Features:

- Inline Mounting
- Dial Indicator for Easy Pressure Setting
- 5 amp Rated Snap Action Micro Switch
- Heavy Duty Aluminum Components
- Compact Size
- DIN 43650HCM Connector
- IP65 Rated
- Field Adjustable 30-150 PSIG
- +/- 2% Repeatability
- Single Pole/Double Throw Switch

Operation

The pressure switch monitors the air pressure in your pneumatic system. When the pressure in your system either drops below or exceeds the set point pressure, an electrical output is given.

Using a 0.125" (3mm) hex wrench, turn the adjusting screw **(A)** clockwise to increase the pressure set point and counterclockwise to decrease the pressure setting. One complete revolution of the adjusting screw covers the complete adjustment range of 30 to 150 PSIG (2 to 10 bar).

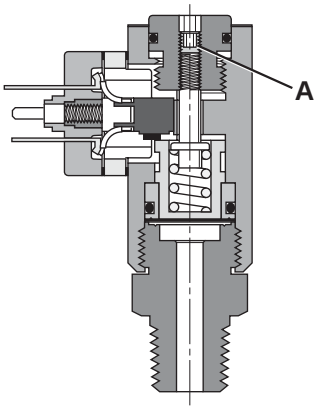

Definitions and Terminology

Repeatability — Accuracy is the maximum allowable set point deviation of a single pressure or temperature switch under one given set of environmental and operational conditions.

Single Pole Double Throw (SPDT) Switching element — A SPDT switching element has one normally open, one normally closed and one common terminal. Three terminals mean that the switch can be wired with the circuit either normally open (NO), or normally closed (NC), or both.

Dead Band — The dead band, sometimes referred to as “differential” or “hysterisis”, is the change in pressure between actuation and deactuation set points.

Dimensions

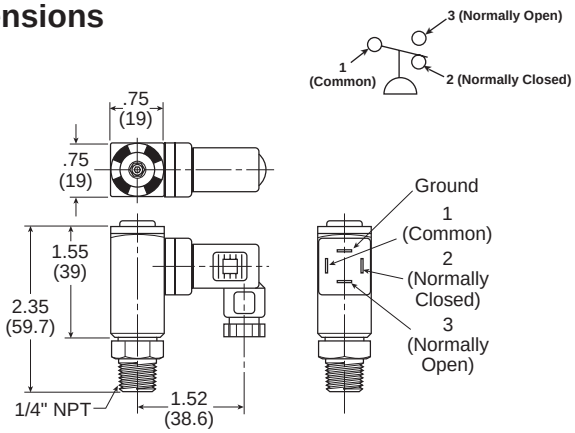

Kits and Accessories

Bushing 1/4" to 3/8" 209P-6-4
Bushing 1/4" to 1/2" 209P-8-4

Specifications

Electrical ..... 5 AMP, 12/24VDC, 125/250VAC
Maximum Inlet Pressure ..... 300 PSIG (20 bar)
Mechanical Life ..... 10^6 at standard operating conditions
Electrical Connection ..... DIN 43650HCM
Electrical Protection IP65
Repeatability ..... ±2% at 70°F (20°C) Ambient
Temperature Range ..... -40°F to 180°F (-40°C to 80°C)
Weight ..... 0.13 lb. (0.06 Kg)

Materials of Construction

Diaphragm ..... Nitrile
Housing ..... Anodized Aluminum

Parker Hannifin Corporation
Pneumatic Division
Richland, Michigan
www.parker.com/pneumatics

Pressure Switch – P01908

Air Line Accessories

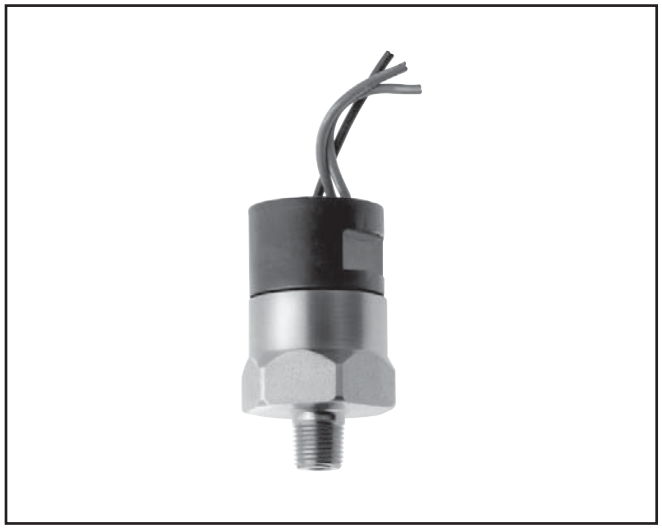

Features:

- Inline Mounting
- 5 amp Rated Snap Action Micro Switch
- Brass Body
- Compact Size
- Flying Leads Electrical Connection
- IP65 Rated
- Field Adjustable 25-100 PSIG
- +/- 2% Repeatability
- Single Pole / Double Throw Switch

Operation

The pressure switch monitors the air pressure in your pneumatic system. When the pressure in your system either drops below or exceeds the set point pressure, an electrical output is given.

Remove screw **(A)** from the top of the switch. Using a 0.125" (3mm) hex wrench, turn the adjusting screw **(B)** clockwise to increase the pressure set point and counterclockwise to decrease the pressure setting, replace screw **(A)**. Adjustment range of 25 to 100 PSIG (1.7 to 7.5 bar).

Standard electrical circuit
Black..... Common
Green..... Normally Closed
Red..... Normally Open

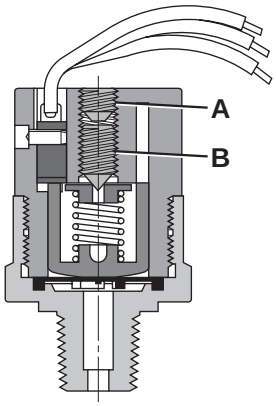

Definitions and Terminology

Repeatability — Accuracy is the maximum allowable set point deviation of a single pressure or temperature switch under one given set of environmental and operational conditions.

Single Pole Double Throw (SPDT) Switching element — A SPDT switching element has one normally open, one normally closed and one common terminal. Three terminals mean that the switch can be wired with the circuit either normally open (NO), or normally closed (NC), or both.

Dead Band — The dead band, sometimes referred to as “differential” or “hysterisis”, is the change in pressure between actuation and deactuation set points.

Dimensions

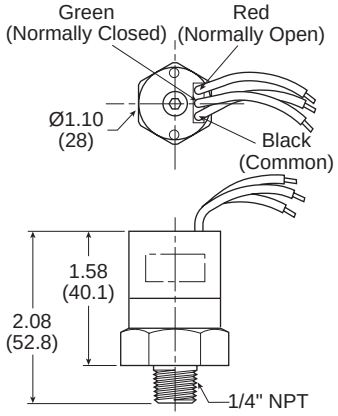

Kits and Accessories

Bushing 1/4" to 3/8" 209P-6-4
Bushing 1/4" to 1/2" 209P-8-4

Specifications

Electrical ..... 5 AMP, 12/24VDC, 125/250VAC
Maximum Inlet Pressure ..... 300 PSIG (20 bar)
Mechanical Life ..... $2x10^6$ at 75 PSIG (5 bar)
Electrical Connection ..... 18" Flying Leads
Electrical Protection IP65
Repeatability ..... ±2% at 70°F (20°C) Ambient
Temperature Range ..... -40°F to 180°F (-40°C to 80°C)
Weight ..... 0.23 lb. (0.11 Kg)

Materials of Construction

Diaphragm ..... Nitrile
Housing ..... Brass

Parker Hannifin Corporation
Pneumatic Division
Richland, Michigan
www.parker.com/pneumatics

Mobile Pressure Switch
P04159 – Normally Closed
P04160 – Normally Open

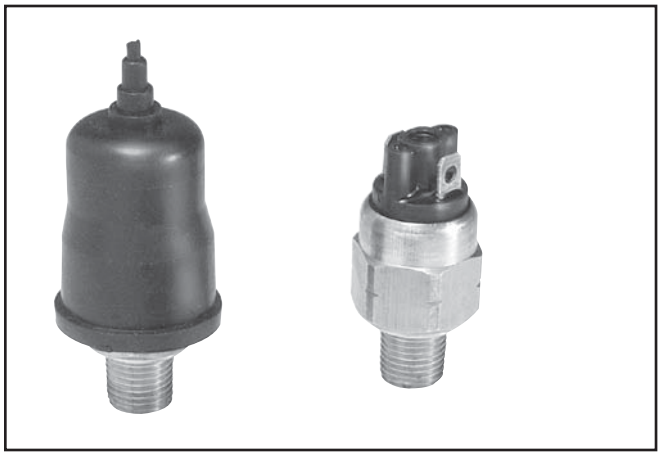

Features

- Inline Mounting
- 4 Amp Rated Snap Action Micro Switch
- Brass Body
- Compact Size
- Spade Electrical Connection
- Field Adjustable 15 to 150 PSIG
- Rubber Boot Protection
- ±5% Repeatability @ 70°F (20°C) Ambient Temperature
- Temperature Range -40°F to 220°F (-40°C to 105°C)

Applications

These Pressure Switches are intended for use in mobile, general-purpose, compressed air systems. Product is suitable for all trailer air-ride systems, truck suspension systems, associated bus door systems, and electro-pneumatic operations. The performance requirements and reliability are suitable for the extreme cold weather environment of North American winters.

Operation

The pressure switch monitors air pressure and provides an electrical output when the pressure drops below or exceeds an adjustable preset pressure.

Adjust the pressure switch using a flat head screwdriver; turn adjustment screw clockwise to increase set point or counterclockwise to decrease set point.

Dimensions

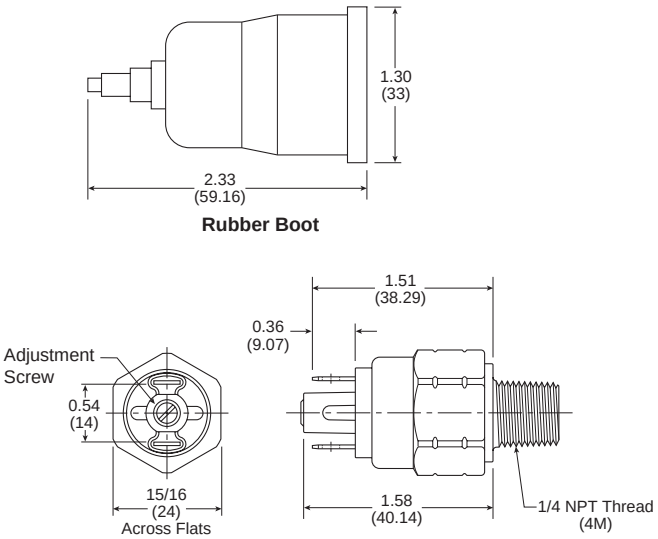

Kits and Accessories

Rubber Boot P04161

Specifications

Switch Position
P04159 ..... Normally Closed
P04160 ..... Normally Open

Electrical Rating 100VA

Electrical Life ..... 4 Amp in Rush @ 12VDC >2,000,000 Cycles

Maximum Inlet Pressure ..... 300 PSIG (20 bar)

Mechanical Life ..... >2 x 10^6 @ 75 PSIG (5 bar)

Electrical Connection ..... 1/4 x 1/32 Spade

Electrical Protection ..... Rubber Boot

Repeatability ..... ±5% @ 70°F (20°C)

Ambient & Medium Temperature Range ..... -40°F to 220°F (-40°C to 105°C)

Weight ..... 0.14 lb. (0.06 Kg)

Materials of Construction

Diaphragm ..... Kapton

Housing ..... Brass

Parker Hannifin Corporation
Pneumatic Division
Richland, Michigan
www.parker.com/pneumatics

Automatic Electrical Drain Valve

WDV3 Series

WDV3-G

The WDV3 Electrical Drain is designed to remove condensate from compressors, compressed air dryers and receivers up to any size, type or manufacturer.

The WDV3 offers true installation simplicity and it is recognized as the most reliable and best performing condensate drain worldwide. The large orifice in the direct acting valve, combined with its sophisticated timer module ensure many years of trouble-free draining of condensate.

Specifications

Operating Pressure..... 230 PSIG (15,9 bar)

Ambient Operating Range Temperature:
34° to 130°F (1.1° to 54°C)

Coil Insulation
Class H .....340°F (171.1°C)

Voltages
AC 115, 230/50-60

Timer:
Open Time ..... .5 to 10 sec., Adjustable
Cycle Time..... .5 sec. to 45 min., Adjustable

Maximum Current Rating .....4mA Max.

Port Size..... 1/4, 3/8, 1/2 NPT

Weight ..... 1.8 lb. (0.8 kg)

Materials of Construction

Valve Body .....Brass / Stainless Steel

Enclosure (NEMA 4)..... ABS Plastic

Internal Parts .....Brass / Stainless Steel

Sealing Material..... FPM (Fluorocarbon)

Benefits

- Does Not Air-Lock During Operation
- Compressed Air Systems Up to Any Size
- Also Available In Stainless Steel
- The Direct Acting Valve Is Serviceable
- Suitable for All Types of Compressors
- TEST (Micro-Switch) Feature
- High Time Cycle Accuracy
- Large (4.5mm) Valve Orifice

Ordering Information

	Family	Voltage	Pipe Size	Valve Material	Pressure
WDV3 –	G	1	2	B	L

Family
G General

Voltage
1 120V AC
2 230V AC
3* 24VDC

* Available in 1/2" Only

Pipe Size
2 1/4" General
3 3/8" General
4 1/2" General

Valve Material
B Brass

Pressure
L 230 PSIG (16 bar)

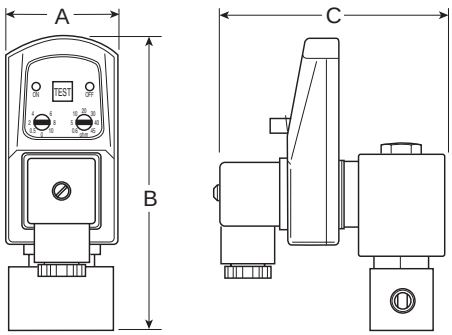

Model Selection and Dimensions

Model Number	A	B	C
WDV3-G**BL	1.73 (44)	4.53 (115)	3.46 (88)

Parker Hannifin Corporation
Pneumatic Division
Richland, Michigan
www.parker.com/pneumatics

WDV2-425

Features

- Zero Air Loss
- Automatically Self-Adjusting for Voltages from 110 to 230V
- Sensor Device with No Moving Parts
- Sophisticated Electronic Controls
- Alarm with Remote Contacts
- Large Inlet Port to Eliminate Clogging
- Manual Push-to-Test Button
- Automatically Clears Slugs

Benefits

- Energy Efficient
- World-Wide Applications
- Long Life
- High Reliability
- Versatility, Early Warning
- Low Maintenance
- On Demand Operation
- Maintenance Free

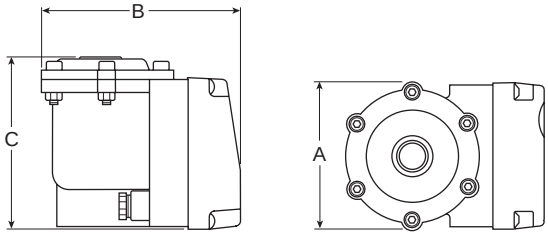

Model Selection and Dimensions

Model Number	A	B	C
WDV2-425	3.23 (82)	4.61 (117)	4.65 (118)

Specifications

Drain Volume ..... 0.01 Gallons / Cycle
Maximum Fluid Temperature ..... 150°F (60°C)
Voltage ..... 110 to 240V, 50/60 Hz
Inlet Ports (2) ..... 1/2" NPT
Outlet Ports (1) ..... 5/16" (8mm) I.D. Hose

Operating Conditions

Ambient Temperature ..... 33° to 140°F (0° to 60°C)
Maximum Operating Pressure ..... 232 PSIG (16 bar)

The WDV2 Electronic Demand Drain Valves, with zero air loss, are suitable for all compressed air system applications from aftercoolers to filters to receivers to refrigerated dryers. These drain valves activate automatically and are both reliable and economical.

Alarm Mode

Should the drain fail to discharge due to an excessive volume of condensate or blocked outlet piping, an alarm condition is activated. During the alarm condition, the drain cycles continuously in an attempt to remove the excess condensate. At the same time, the volt free alarm contacts change state and the normally green power LED flashes to indicate a problem. When the excess condensate or blockage has been cleared, the drain will resume normal operation.

Operation

1. Upon power up, the outlet valve is closed and sensor is constantly monitoring for presence of liquid.

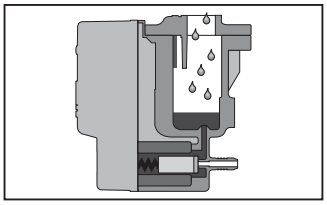

2. When condensate is detected by the sensor, the outlet valve is opened for a pre-set time.

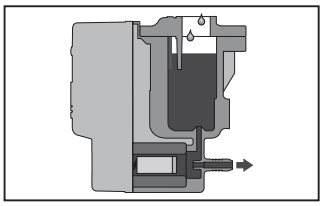

3. The condensate is discharged from the outlet port, due to the system pressure acting on the top of the liquid.

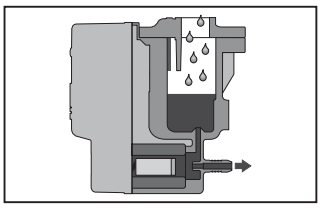

4. The outlet valve is closed after a pre-set time has expired. The opening time has been calculated to always ensure a small amount of liquid remains in bowl. This liquid acts as a seal, preventing air loss.

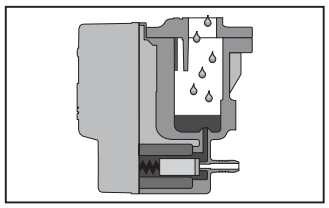

Level monitoring and discharge operation are continuous.

Parker Hannifin Corporation
Pneumatic Division
Richland, Michigan
www.parker.com/pneumatics

O.S.H.A. Certification — All safety blow guns conform to the requirements of Compressed Air Standards as currently described in the U.S. Bureau of Labor Standards, paragraph 1910.242, when pressurized at the inlet to a maximum of 100 PSIG. Conform to current O.S.H.A. Directive No. 100-1.

Brass Nozzle Blow Guns

Contoured lever or button control both provide a natural, comfortable grip even when used with gloves. Finger guard and hang-up hook for finger protection and quick safe storage. Die cast zinc body, painted finish.

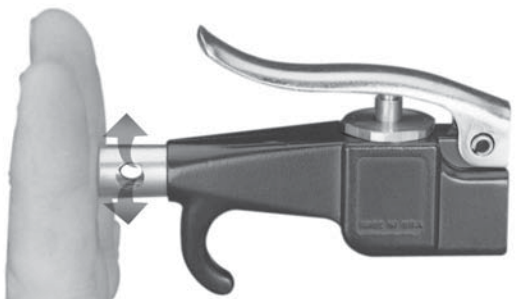

Lever Operated

Part Number	Inlet Port	SCFM Rating*
00475 0010	1/4"	20

Button Operated

Part Number	Inlet Port	SCFM Rating*
00470 0010	1/4"	20

*Based on 100 PSIG inlet pressure.

Vortec FLO-GAIN Blow Guns

A quiet Vortec FLO-GAIN nozzle is combined with a high performance blow gun. Compressed air attains sonic velocity through an adjustable slot and attaches to the exterior surface of the cone shaped nozzle. Settings are shown on a micrometer dial. Sound level of 80 dBA with 80 PSIG inlet. Finger guard and hang-up hook offers desirable finger protection and quick secure storage.
Die cast zinc body, painted finish.

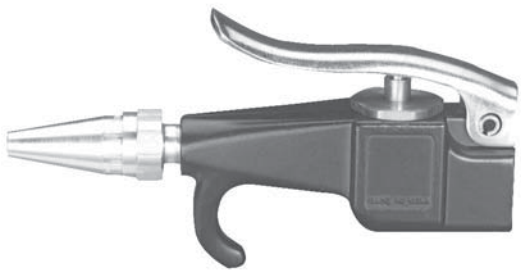

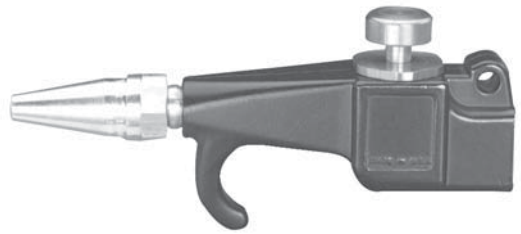

Lever Operated

Part Number	Inlet Port	SCFM Rating*
00475 0900	1/4"	70+

Button Operated

Part Number	Inlet Port	SCFM Rating*
00470 0900	1/4"	70+

*Based on 100 PSIG inlet pressure.

Parker Hannifin Corporation
Pneumatic Division
Richland, Michigan
www.parker.com/pneumatics

Self-Regulating Blow Gun

Designed with integral self-regulating pressure reducing valve for automatic shut-off when nozzle is blocked. Prevents air pressure buildup over 30 PSIG in compliance with U.S. Dept. of Labor standards.

Air shield aids in protecting the operator against blow back of flying chips of dirt. Designed to operate at less than 90 dBA to comply with government regulations. Die cast zinc body, painted finish.

May be used with nozzle extensions on page H4.

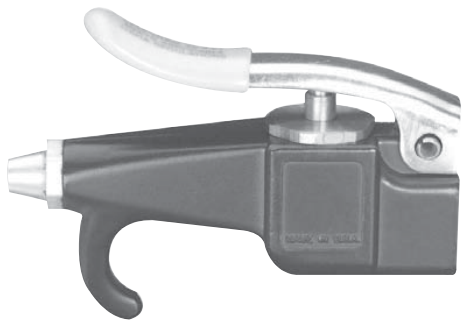

Lever Operated

Part Number	Inlet Port	SCFM Rating*
00475 2900	1/4"	10

Performance Data

Inlet Pressure	Blocked Pressure	Sound Level
70 PSIG	17.0 PSIG	79 dBA
100 PSIG	21.0 PSIG	83 dBA
175 PSIG	28.0 PSIG	87 dBA

*Based on 100 PSIG inlet pressure.

Pistol Grip Blow Gun

Pistol grip is easy to aim for quick and efficient cleaning. Ideal for all shop housekeeping purposes. Lightweight and easy to handle. Easy trigger action features instant spring adjustment for controlled air. Get the amount of air where you want it with no restrictions, no cut-offs! Makes for a convenient connection for overhead or under bench floor air use.

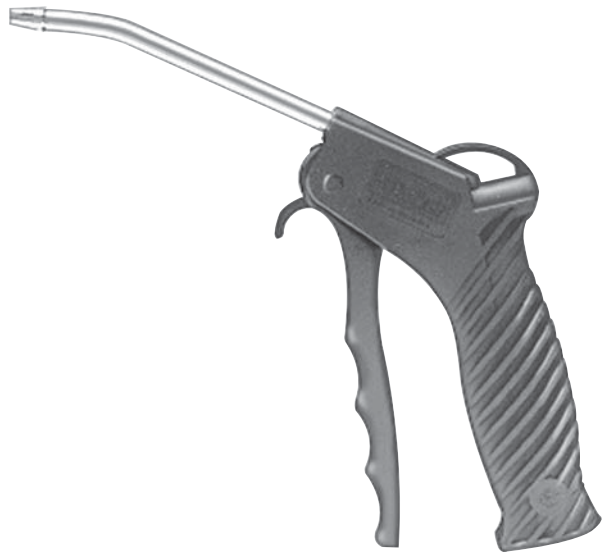

Part Number	Inlet Port	Rated Pressure	Temperature Range	OSHA Rated
BG441-NBL	1/4"	175 PSI	120° F	No

Parker Hannifin Corporation
Pneumatic Division
Richland, Michigan
www.parker.com/pneumatics

Brass Nozzle
Model No. 00470 7020

General purpose nozzles are supplied as standard on 00470 0010, 00475 0010 and 07184 1000 blow guns. Conform to the requirements of the Williams Steiger Occupational Safety and Health Act of 1970, paragraph 1910.242 when fitted with blow guns pressurized at the inlet to a maximum of 100 PSIG. Conform to O.S.H.A. Directive 100-1.

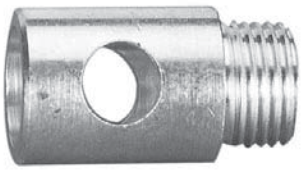

FLO-GAIN Nozzle
Model No. W1110 0900

This FLO-GAIN nozzle is the most widely used of the transvector products for industrial blow off. Compressed air attains sonic velocity through an adjustable slot and attaches to the cone shaped exterior surface of the nozzle. Induction and entrainment take place outside the nozzle. Factory slot setting is .008 inch, but is adjustable from closed to .012 inch. A micrometer dial allows adjustment without the use of shims or gauges.

Must be used with filtered air.

470 and 475 Series Blow Guns

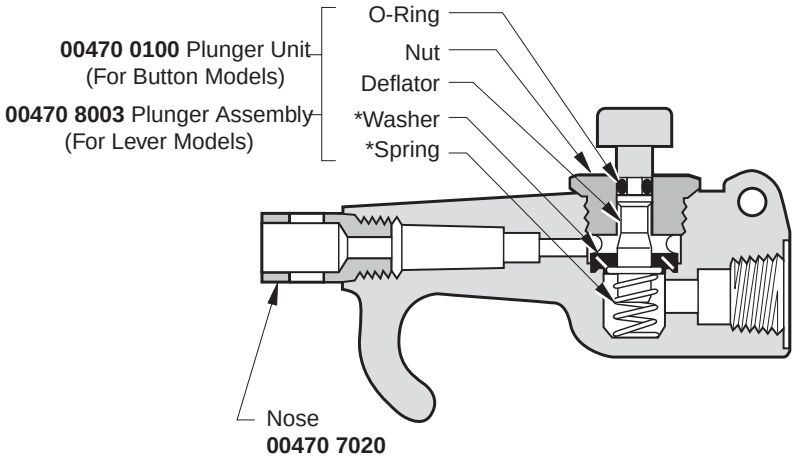

* Contained in Service Kit No. **00470 0090**

Parker Hannifin Corporation
Pneumatic Division
Richland, Michigan
www.parker.com/pneumatics

Ball Valves

1/4" to 2", 2-Way
1/4" to 1", 2-Way Vented

Plug Valves

1/8" to 1/4" Pipe Size

Section K
www.parker.com/pneu/ball

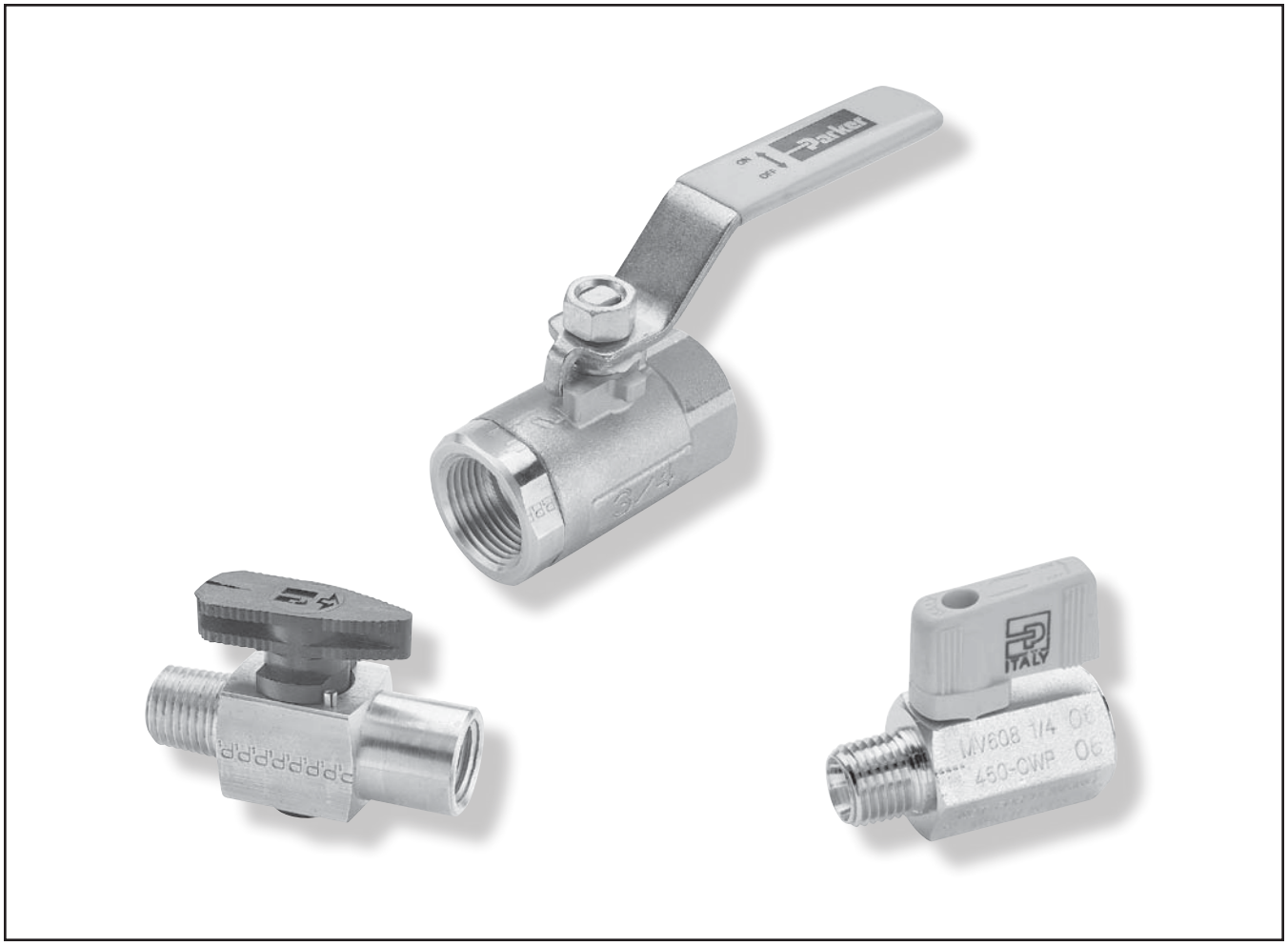

Product Index K2
Ball Valves
Basic Features K3
Part Numbers & Dimensions..... K4
Stainless Steel Ball Valves K5
Plug Valves
Basic Features K6
Part Numbers & Dimensions..... K7
Drain Cocks
Basic Features K8
Part Numbers K8

Parker Hannifin Corporation
Pneumatic Division
Richland, Michigan
www.parker.com/pneumatics

Brass Ball Valves	**XV500P** Female-Female Page K4	**MV200** Mini Valve Page K4	**MV608** Mini Valve Page K4	**MV609** Mini Valve Page K4	
Stainless Steel Valves	**XV502SS** Female-Female Page K5				
Plug Valves & Drain Cocks	**PV607** Male-Male Plug Valve Page K7	**PV608** Male-Female Plug Valve Page K7	**PV609** Female-Female Plug Valve Page K7	**DC602** Internal Seal Drain Cock Page K8	**DC604** External Seal Drain Cock Page K8

Parker Hannifin Corporation
Pneumatic Division
Richland, Michigan
www.parker.com/pneumatics

Materials of Construction	
Valve Body:	Forged brass
Ball:	Chrome plated brass
Seats / Seals:	PTFE
Handle:	Steel

Style	Type	Material	Size	Options
V	**500**	**P**	**-4**	**-00**
Style	• V-Valve • VP-Valve, Padlocking handle • VV-Valve, Vented • VVP-Valve, Vented, Padlocking handle			
Type	500-Female / Female PTF ports			
Material	P- Brass PN-Nickel plated			
Size	4 = 1/4", 6 = 3/8", 8 - 1/2", 12 = 3/4", 16 = 1", 20 = 1-1/4", 24 = 1-1/2", 32 = 2"			
Options	• 01-Stainless steel ball & stem • 02-Stainless steel handle & nut • 03-Stainless steel ball, stem, handle & nut • 04-Tee handle • 08-Unmarked yellow vinyl handle cover • 21-Oval handle			

Specifications	
Operating Instructions:	Quarter turn is “ON” or “OFF”. (Provides positive stop action for full shutoff.)
Pressure Range:	• 600 WOG, cold non-shock • Saturated steam up to 150 PSI and 400°F • Vacuum service to 29 inches Hg. • Vented up to 250 PSI
Temperature Ranges:	0° to +350°F
Note:	Periodically check the adjustable packing nut and tighten as required.

Flow Data	
Valve Size	**Cv**
1/4	4.0
3/8	5.8
1/2	12.0
3/4	25.0
1	35.0
1-1/4	57.0
1-1/2	92.0
2	224.0

Parker’s industrial ball valve product line is intended for general purpose use. Please be aware that ball valves are intended for use in the fully open or closed positions. Depending on application conditions, throttling of the valve may result in premature seal failure and/or inability to turn the valve handle.

For use as fuel line shutoffs for gasoline and diesel powered over the highway, off highway, and construction equipment vehicles. Water and air service lines on capital equipment and plant design plumbing that require total shutoff capability.

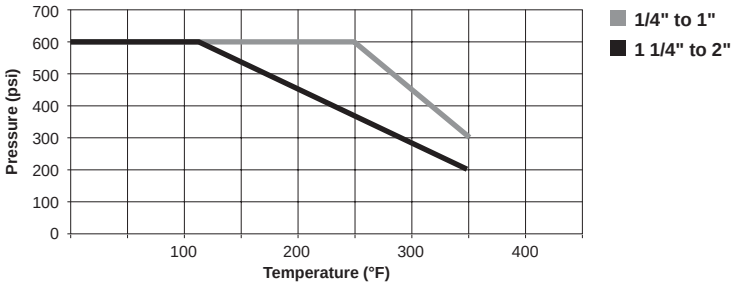

Parker Hannifin Corporation
Pneumatic Division
Richland, Michigan
www.parker.com/pneumatics

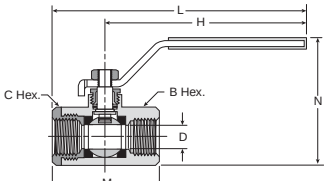

Female-Female Pipe Ends XV500P

Part No.	Pipe Thread	B Hex	C Hex	H	L	M	N	Flow Dia. D
XV500P-4	1/4	15/16	15/16	3.96	4.90	2.03	2.47	.375
XV500P-6	3/8	15/16	15/16	3.96	4.90	2.03	2.47	.375
XV500P-8	1/2*	1-1/16	1-1/16	3.96	5.00	2.20	2.58	.500
XV500P-12	3/4**	1-1/4	1-5/16	3.96	5.25	2.42	2.81	.685
XV500P-16	1**	1-1/2	1-9/16	3.96	5.34	2.75	3.08	.875

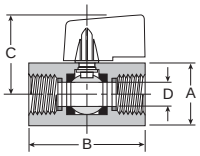

Female Pipe Ends, Compact Handle, Mini Ball Valve MV609

Part No.	Pipe Thread	A Hex	B	C	Flow Dia. D
MV609-2	1/8	.83	1.71	1.22	.24
MV609-4	1/4	.83	1.71	1.22	.31
MV609-6	3/8	.83	1.71	1.22	.31
MV609-8	1/2	.98	2.11	1.30	.39
MV609-6-4	3/8x1/4	.83	1.71	1.22	.31

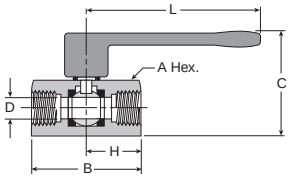

Female Pipe Ends, Lever Handle, Mini Ball Valve MV200

Part No.	Pipe Thread	A Hex	B	C	H	L	Flow Dia. D
MV200-2	1/8	.83	1.71	1.20	.91	2.83	.31
MV200-4	1/4	.83	1.71	1.20	.91	2.83	.31
MV200-6	3/8	.83	1.71	1.20	.91	2.83	.31
MV200-8	1/2	.98	2.11	1.28	1.10	2.83	.39

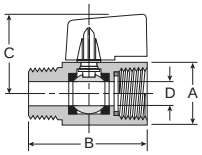

Male-Female Pipe Ends, Compact Handle, Mini Ball Valve MV608

Part No.	Pipe Thread	A Hex	B	C	Flow Dia. D
MV608-2	1/8	.83	1.72	1.22	.20
MV608-4	1/4	.83	1.72	1.22	.31
MV608-6	3/8	.83	1.72	1.22	.31
MV608-8	1/2	.98	2.11	1.30	.39

Parker Hannifin Corporation
Pneumatic Division
Richland, Michigan
www.parker.com/pneumatics

Materials of Construction	
Valve Body:	CF-8M Stainless Steel
Ball:	Stainless Steel
Seats / Seals:	PTFE
Handle:	Stainless Steel

Pressure and Temperature Range	
Pressure Range	2,000 PSI Sizes: 1/4" - 1" 1,500 PSI Sizes: 1-1/4" - 2"
Temperature Range	0° to +400°F

Style	Type	Material	Size	Options
V	**502**	**SS**	**-4**	**-00**
Style	V - Valve VP - Valve, Padlocking handle			
Type	502-Panel mount female/ Female PTF ports			
Material	SS-stainless steel			
Size	4 = 1/4", 6 = 3/8", 8 = 1/2", 12 = 3/4", 16 = 1", 20 = 1-1/4", 24 = 1-1/2", 32 = 2"			
Options	20 - Short handle 21 - Oval handle 35 - Welded retainer nut			

Approvals
Meets material requirements of NACE MR-01-75

Parker's industrial ball valve product line is intended for general purpose use. Please be aware that ball valves are intended for use in the fully open or closed positions. Depending on application conditions, throttling of the valve may result in premature seal failure and/or inability to turn the valve handle.

Applications include chemical plants, refineries, steel mills, industrial fuel lines and agricultural equipment. Meets material requirements of NACE MR-01-75.

Flow Data	
Valve Size	**Cv**
1/4	4.0
3/8	6.0
1/2	14.0
3/4	35.0
1	54.0
1-1/4	74.0
1-1/2	120.0
2	226.0

Note: Periodically check the adjustable packing nut and tighten as required.

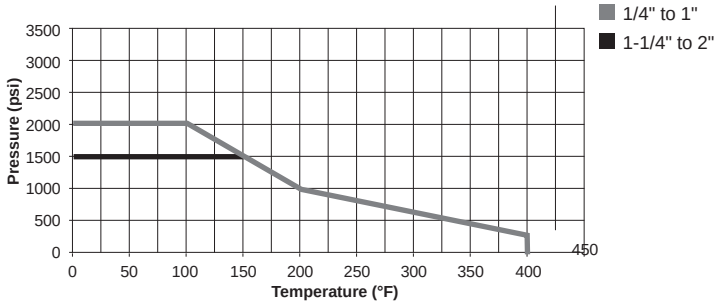

Mounting Detail

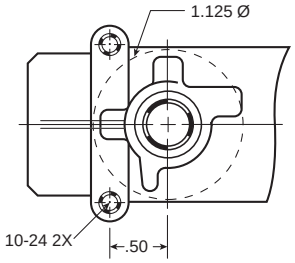

Female Pipe Ends, Panel Mount XV502SS

Part No.	Pipe Thd (NPT)	B/C Hex	F	G	H	I THD	L	M	N	Panel Flow Dia.D	Hole Dia.
XV502SS-4	1/4	15/16	.500	1.125	4.00	10-24 UNC	5.03	2.07	2.52	.380	1.125
XV502SS-6	3/8	15/16	.500	1.125	4.00	10-24 UNC	5.03	2.07	2.52	.380	1.125
XV502SS-8	1/2	1-1/16	.500	1.125	4.00	10-24 UNC	5.13	2.27	2.65	.500	1.125
XV502SS-12	3/4	1-3/8	.875	1.375	5.00	10-24 UNC	6.67	3.35	3.46	.790	1.500
XV502SS-16	1	1-5/8	.875	1.375	5.00	10-24 UNC	6.77	3.54	3.74	1.000	1.500
XV502SS-20	1-1/4	2	1.000	1.500	7.00	1/4-20 UNC	9.00	4.00	4.55	1.250	2.000
XV502SS-24	1-1/2	2-3/8	1.000	1.500	7.00	1/4-20 UNC	7.19	4.38	5.42	1.500	2.000
XV502SS-32	2	3	1.000	1.500	7.00	1/4-20 UNC	9.75	5.50	5.68	2.000	2.000

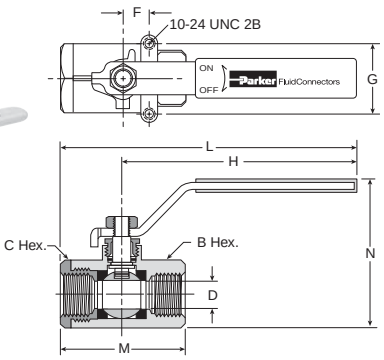

Parker Hannifin Corporation
Pneumatic Division
Richland, Michigan
www.parker.com/pneumatics

Materials of Construction	
Fitting:	Brass
Nut:	Brass
Ferrule:	Brass

Nomenclature	
Example: PV607-2-options	**Attribute:**
PV	Plug valve
607	Male to male
2	1/8" Male
N (not shown)	Neoprene (brown)
V (not shown)	Florocarbon (red)

Specifications	
Pressure Range	Up to 250 PSI
Temperature Range	-40° to +175°F

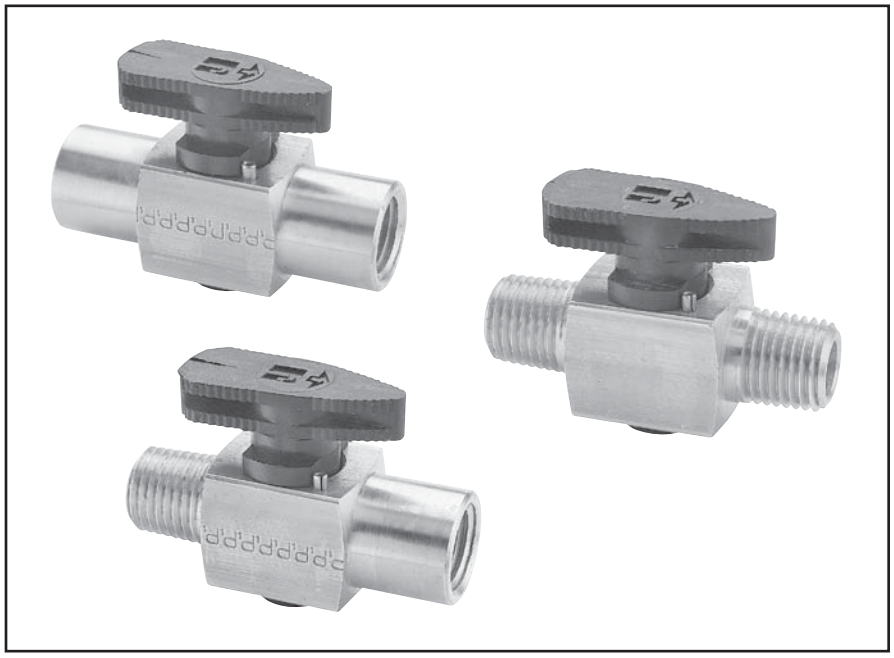

Compact design features internal nitrile seals and a one-piece extruded brass body, offering compatibility with a wide range of media. The one-piece stem / handle combination is constructed of glass reinforced acetal copolymer. Parker plug valves feature 1/4 turn shutoff allowing for ease of operation. All plug valves are 100% leak tested and are certified to be leak free to one SCCM.

Installation Instructions

To assure sealability and reliable performance, the valve must be installed so that the flow media travels in the direction of the arrow on the valve handle.

Valve Components

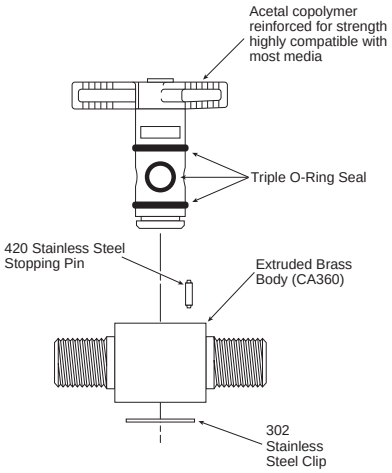

Parker Hannifin Corporation
Pneumatic Division
Richland, Michigan
www.parker.com/pneumatics

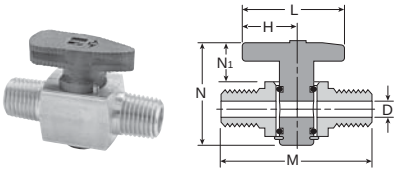

Male Pipe to Male Pipe Plug Valve PV607

Part No.	Pipe Thread	H	L	M	N	N1	Flow Dia. D
PV607-2	1/8	.67	1.34	1.66	1.38	.51	.200
PV607-4	1/4	.67	1.34	2.02	1.38	.51	.200

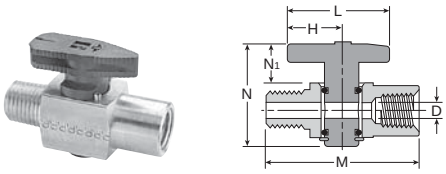

Female Pipe to Male Pipe Plug Valve PV608

Part No.	Pipe Thread	H	L	M	N	N1	Flow Dia. D
PV608-2	1/8	.67	1.34	1.67	1.38	.51	.200
PV608-4	1/4	.67	1.34	2.06	1.38	.51	.200

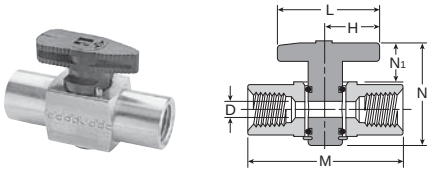

Female Pipe to Female Pipe Plug Valve PV609

Part No.	Pipe Thread	H	L	M	N	N1	Flow Dia. D
PV609-2	1/8	.67	1.34	1.68	1.38	.51	.200
PV609-4	1/4	.67	1.34	2.10	1.38	.51	.200

Parker Hannifin Corporation
Pneumatic Division
Richland, Michigan
www.parker.com/pneumatics

Features

Drain Cocks

Drain Cock Nomenclature	
Example: DC604-2	**Attribute:**
DC	Drain Cock
604	External Seat
2	1/8 Pipe Thread

Ground Plug Shutoff Nomenclature	
Example: V204F-4-2	**Attribute:**
V	Valve
204	Flared to Male Pipe
F	Flared
4	1/4 Tube O.D.
2	1/8 Pipe Thread

Specifications	
Ground plug shutoff:	30 PSI
Drain Cocks	150 PSI
Temperature Ranges:	See specific part number for temperature range
Operating Fluid:	Air, water, gas and certain other fluids.
Note:	Lubricant may not be compatible with some fluids, contact factory for special fluid requirements

Drain cocks are manufactured in both external and internal seats. Ground plug shutoffs are manufactured from castings or forged bodies for extra strength. Hand tightening provides a metal - to - metal seal.

Internal Seal Drain Cock DC602

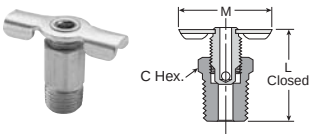

Temperature Range: -65° to +250°F

Part No.	Pipe Thread	C Hex	L	M
DC602-2	1/8	13/32	.92	1.25
DC602-4	1/4	9/16	.94	1.25

External Seal Drain Cock DC604

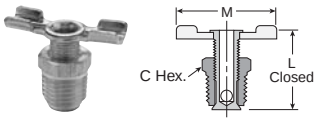

Temperature Range: -25° to +250°F

Part No.	Pipe Thread	C Hex	L	M
DC604-2*	1/8	7/16	.85	1.25
DC604-4	1/4	9/16	1.00	1.38
DC604-6*	3/8	11/16	1.22	1.68

*When assembled handle wings are down facing

Parker Hannifin Corporation
Pneumatic Division
Richland, Michigan
www.parker.com/pneumatics

Quick Couplings

Section L

Industrial Interchange Nipples..... L2-L3
Sleevmatic Couplers..... L4-L6
Saflomatic Couplers L7-L8
Economatic Quick Connect Couplings..... L9-L10

Parker Hannifin Corporation
Pneumatic Division
Richland, Michigan
www.parker.com/pneumatics

Description

Industrial interchange nipples conform to MIL-C4109 and are for use with either Sleevmatic or Saflomatic couplers. The industrial interchange nipples are completely interchangeable with similar nipples manufactured by other quick coupling manufacturers conforming to A-A-59439 (formerly known as MIL-C-4109F), ANSI/(NFPA) T3.20.14-1990, or ISO6150-B requirements.

Hardened wear points and solid barstock construction provide long service life. Precision machined surfaces and hardened load-bearing areas resist the effects of mechanical shock in the most rugged applications.

Female Pipe Thread

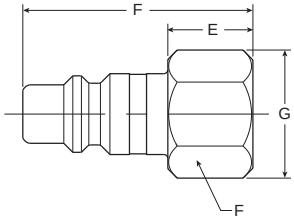

Body Size (Inches)	Part No. Steel	Thread Size	Overall Length D	Exposed Length* E	Hex Size F	Largest Diameter G
1/4	H1C	1/8-27	1.48	0.71	0.50	0.58
1/4	H3C	1/4-18	1.56	0.80	0.62	0.72
1/4	H3C-E	3/8-18	1.60	0.83	0.81	0.94
3/8	H1E	1/4-18	1.60	0.69	0.62	0.72
3/8	H3E	3/8-18	1.69	0.74	0.81	0.94
3/8	H3E-F	1/2-14	1.84	0.90	1.00	1.16
1/2	H1F	3/8-18	2.03	0.79	0.81	0.94
1/2	H3F	1/2-14	2.20	0.96	1.00	1.16
1/2	H3F-G	3/4-14	2.30	1.05	1.25	1.44
3/4	H3G-F	1/2-14	2.22	1.06	1.00	1.16
3/4	H3G	3/4-14	2.18	1.02	1.25	1.44
3/4	H3G-J	1-11½	2.41	1.25	1.63	1.80

* This dimension represents portion of nipple that is exposed when nipple is inserted in the coupler.

Male Pipe Thread

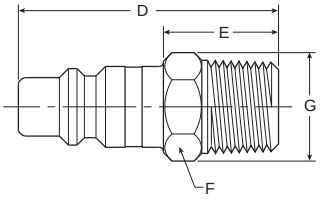

Body Size (Inches)	Part No. Steel	Thread Size	Overall Length D	Exposed Length E	Hex Size F	Largest Diameter G
1/4	H0C	1/8-27	1.68	0.92	0.50	0.58
1/4	H2C	1/4-18	1.66	0.89	0.56	0.65
1/4	H2C-E	3/8-18	1.90	1.14	0.69	0.80
3/8	H00E	1/8-27	1.68	0.73	0.62	0.72
3/8	H0E	1/4-18	1.90	0.95	0.62	0.72
3/8	H2E	3/8-18	1.90	0.95	0.69	0.80
3/8	H2E-F	1/2-14	2.03	1.09	0.88	1.02
1/2	H0F	3/8-18	2.20	0.96	0.69	0.79
1/2	H2F	1/2-14	2.35	1.09	0.88	1.01
1/2	H2F-G	3/4-14	2.40	1.16	1.06	1.22
3/4	H2G-F	1/2-14	2.32	1.16	1.00	1.16
3/4	H2G	3/4-14	2.28	1.12	1.06	1.22
3/4	H2G-J	1-11½	2.56	1.40	1.31	1.52

* This dimension represents portion of nipple that is exposed when nipple is inserted in the coupler.

Parker Hannifin Corporation
Pneumatic Division
Richland, Michigan
www.parker.com/pneumatics

Standard Hose Barb

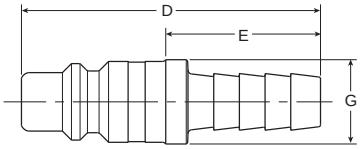

Body Size (Inches)	Part No. Steel	Hose I.D.	Overall Length D	Exposed Length* E	Largest Diameter G
1/4	H8C	1/4	1.72	0.95	0.46
1/4	H8C-D	5/16	1.96	1.20	0.50
1/4	H9C	3/8	1.96	1.20	0.50
3/8	H5E	3/8	1.85	0.90	0.59
3/8	H6E	1/2	2.09	1.14	0.68
1/2	H4F	3/8	2.36	1.12	0.66
1/2	H5F	1/2	2.36	1.12	0.66
1/2	H5F-G	3/4	2.95	1.71	0.87
3/4	H5G-F	1/2	2.47	1.31	0.93
3/4	H5G	3/4	3.00	1.84	0.93
3/4	H5G-J	1	3.24	2.08	1.24

* This dimension represents portion of nipple that is exposed when nipple is inserted in coupler.

Push-Lok Hose Barb**

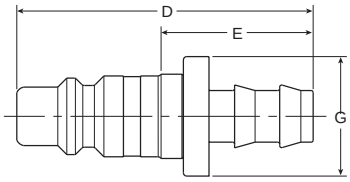

Body Size (Inches)	Part No. Steel	Hose I.D.	Overall Length D	Exposed Length* E	Largest Diameter G
1/4	H8CP	1/4	1.93	1.16	0.69
1/4	H9CP	3/8	2.08	1.31	0.86
3/8	H4EP	1/4	2.02	1.08	0.69
3/8	H5EP	3/8	2.17	1.23	0.88
3/8	H6EP	1/2	2.31	1.37	0.97
1/2	H4FP	3/8	2.52	1.27	0.88
1/2	H5FP	1/2	2.66	1.42	0.97
1/2	H6FP	1/2	2.95	1.71	1.14

* This dimension represents portion of nipple that is exposed when nipple is inserted in coupler.

** Push-Lok hose barbs are designed for use with a push-lok hose and do not require clamps.

Parker Hannifin Corporation
Pneumatic Division
Richland, Michigan
www.parker.com/pneumatics

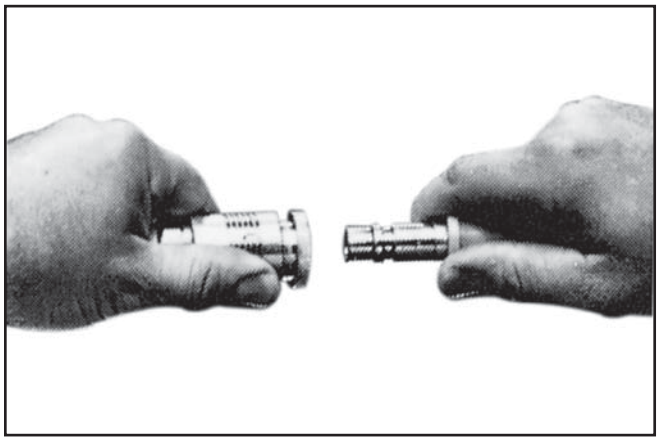

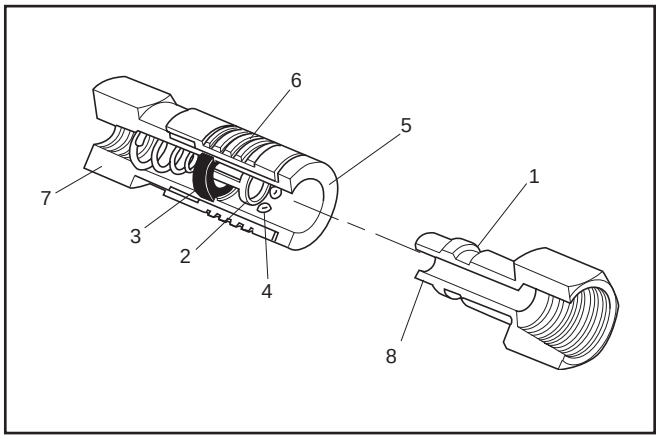

Operation

Sleeve type couplings are widely used to connect air and low-pressure fluid hose lines.

Their compact and economical design uses a ball locking mechanism consisting of captive steel balls that engage the locking groove on the mating nipple. As pictured, the sliding spring loaded sleeve on the coupler must be manually retracted in order to connect or disconnect the nipple. It is easy to do, but two hands are normally required.

Common applications include compressed air, water, grease, paint, limited vacuum and limited gases.

Features

1. Hardened wear points and solid barstock construction provide long life for these quality couplings. Precision machined surfaces resist the effects of mechanical shocks, even in rugged use.
2. Tubular valve with large flow passages delivers high air flows with minimal pressure drop for efficient performance.
3. Molded seals with high quality valve seats form a bubble tight seal for reliable sealing within rated working pressures. The tubular valve minimizes wear on the seal and prolongs seal life.
4. Ball locking mechanism with large numbers of steel or stainless steel locking balls improves resistance to wear, insures positive connections and provides accurate alignment. The ball locking also allows swiveling action that reduces hose torque.
5. Sleeve guard resists accidental disconnection by allowing the coupling to ride over obstructions without the sleeve being accidentally retracted. It also contributes to greater strength.
6. Knurling and grooves on sleeve provide gripping surfaces for ease of operation.
7. Wide range of sizes, materials and end terminations are available. Sleeve type quick couplings are offered with male pipe, female pipe, push-lok hose barb and standard hose barb ends. Materials offered are Nitrile, Ethylene, Propylene and Fluorocarbon for seals and brass or steel for metals.
8. Interchangeability. Sleevmatic couplers are used with industrial interchange nipples conforming to MIL-C4109.

Specifications

	Body Size		
	1/4	**3/8**	**1/2**
Rated Pressure (psi)	300	300	300
Temperature Range			
Nitrile	-40°F to 250°F		
Ethylene Propylene	-65°F to 400°F		
Fluorocarbon	-30°F to 400°F		
Locking Device	4 Balls	8 Balls	8 Balls
Vacuum Data (inches Hg)*			
Disconnected (coupler only)	Not recommended		
Connected	27.4	27.4	27.4

* Couplings for vacuum service should be 100% tested – an extra cost service. Consult factory.

Performance

Sleevmatic
1/4", 3/8", 1/2"

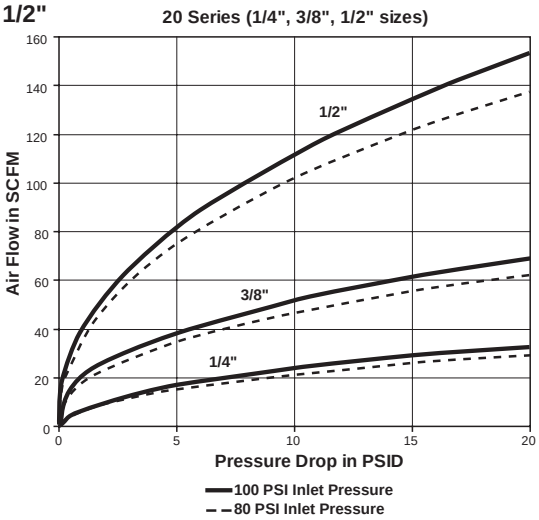

Parker Hannifin Corporation
Pneumatic Division
Richland, Michigan
www.parker.com/pneumatics

Female Pipe Thread

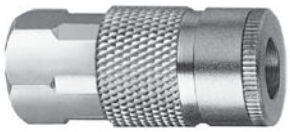

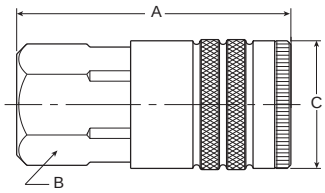

Body Size (Inches)	Part No. Brass	Part No. Steel	Thread Size	Overall Length A	Hex Size B	Largest Diameter C
1/4	B23A	—	1/8-27	1.83	0.75	0.90
1/4	B23	—	1/4-18	1.83	0.75	0.90
1/4	B23E	—	3/8-18	1.95	0.81	0.94
3/8	—	25C	1/4-18	2.22	0.88	1.06
3/8	—	25	3/8-18	2.28	0.88	1.06
3/8	—	25F	1/2-14	2.55	1.00	1.16
1/2	—	17E	3/8-18	2.74	1.00	1.19
1/2	—	17	1/2-14	2.96	1.00	1.19
1/2	—	17G	3/4-14	3.19	1.25	1.44

Male Pipe Thread

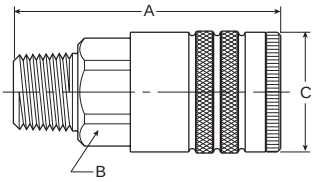

Body Size (Inches)	Part No. Brass	Part No. Steel	Thread Size	Overall Length A	Hex Size B	Largest Diameter C
1/4	B22A	—	1/8-27	1.89	0.75	0.90
1/4	B22	—	1/4-18	2.05	0.75	0.90
1/4	B22E	—	3/8-18	2.08	0.75	0.90
3/8	—	24C	1/4-18	2.36	0.88	1.06
3/8	—	24	3/8-18	2.39	0.88	1.06
3/8	—	24F	1/2-14	2.55	0.88	1.06
1/2	—	16E	3/8-18	2.93	1.00	1.19
1/2	—	16	1/2-14	3.08	1.00	1.19
1/2	—	16G	3/4-14	3.21	1.13	1.30

NOTE: To indicate Fluorocarbon seals, add the letter Y as a suffix to the catalog number of the coupler. To indicate Ethylene Propylene seals, add the letter W as a suffix to the catalog number of the coupler.
Example: B23AY or B23AW

Parker Hannifin Corporation
Pneumatic Division
Richland, Michigan
www.parker.com/pneumatics

Standard Hose Barb

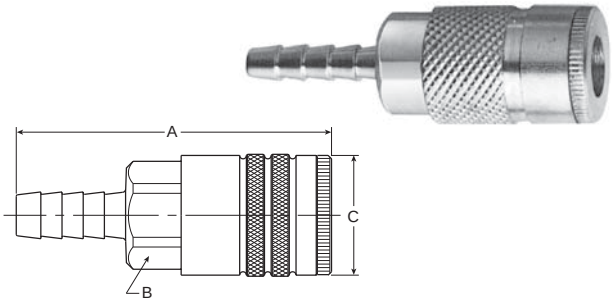

Body Size (Inches)	Part No. Brass	Part No. Steel	Hose I.D.	Overall Length A	Hex Size B	Largest Diameter C
1/4	B20-3B	—	1/4	2.49	0.75	0.90
1/4	B20-4B	—	5/16	2.49	0.75	0.90
1/4	B20-5B	—	3/8	2.49	0.75	0.90
3/8	—	24-5B	3/8	2.86	0.88	1.06
3/8	—	24-6B	1/2	3.08	0.88	1.06
1/2	—	16-5B	3/8	3.37	1.00	1.19
1/2	—	16-6B	1/2	3.62	1.00	1.19
1/2	—	16-7B	3/4	3.96	1.00	1.19

Push-Lok Hose Barb*

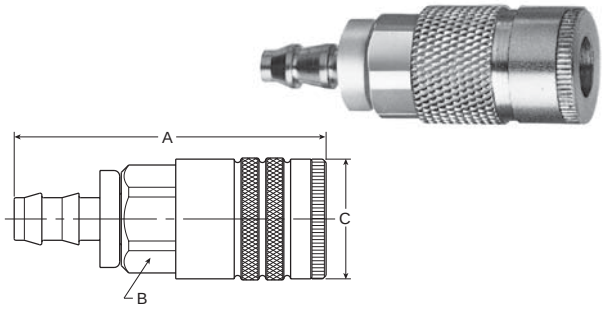

Body Size (Inches)	Part No. Brass	Part No. Steel	Hose I.D.	Overall Length A	Hex Size B	Largest Diameter C
1/4	B20-3BP	—	1/4	2.32	0.75	0.90
1/4	B20-5BP	—	3/8	2.47	0.75	0.90
3/8	—	24-5BP	3/8	2.88	0.88	1.06
1/2	—	16-5BP	3/8	3.35	1.00	1.19
1/2	—	16-6BP	1/2	3.46	1.00	1.19

* Push-Lok hose barbsd are designed for use with push-lok hose and do not require clamps.

NOTE: To indicate Fluorocarbon seals, add the letter Y as a suffix to the catalog number of the coupler. To indicate Ethylene Propylene seals, add the letter W as a suffix to the catalog number of the coupler.
Example: B20-3BY or B20-3BW

Repair Kits

Body Size	Nitrile	Fluorocarbon	Ethylene Propylene
1/4	21K	21KY	21KW
3/8	14K	—	14KW
1/2	16K	16KY	16KW

Parker Hannifin Corporation
Pneumatic Division
Richland, Michigan
www.parker.com/pneumatics

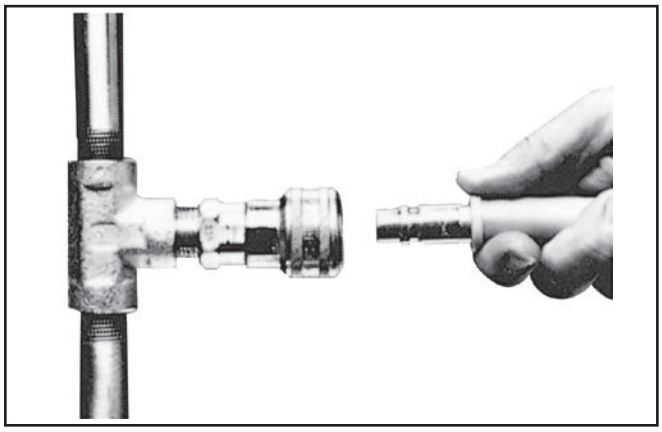

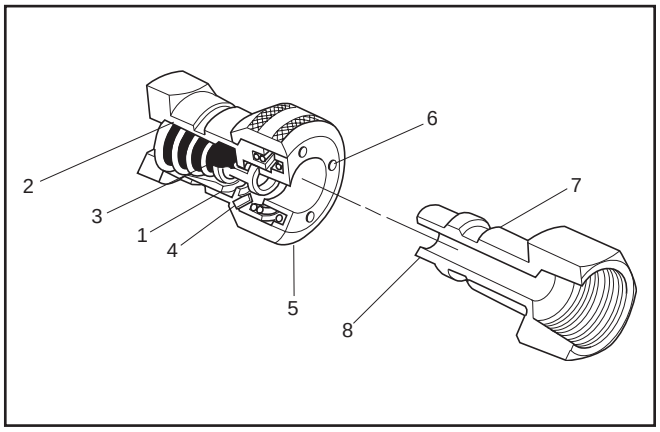

Operation

Push type couplings feature one-handed “automatic” connection by pushing the nipple into the coupler – provided the coupler half is firmly mounted.

The locking mechanism of Saflomatic push type couplers consists of pawls or pins which act directly on the sleeve, thereby causing the sleeve to automatically retract when the mating nipple is inserted. The sleeve must be manually retracted in order to remove the nipple.

Saflomatic couplings are push type “single shut off” couplings.

Common applications include compressed air, water, grease, paint, limited vacuum and limited gas.

Features

1. Saflomatic tubular valves with their large flow windows deliver high air flow with minimum pressure drop – for efficient performance of air tools and other actuators. The tubular valve also provides 360 degree seal support to prevent cold flow and bore constriction, thereby extending seal life.
2. Tapered flow recesses in the valve body provide maximum flow capability.
3. Precision molded seals with high quality valve seats for a bubble tight seal that assures reliable sealing within rated working pressures. The Saflomatic design with its 360° seal support gives maximum seal retention.
4. Locking pawls are of hardened stainless steel for a durable locking mechanism that provides good alignment and sideload resistance.
5. Push-to-connect design permits one-handed connection when the coupler half is rigidly mounted.
6. Back pressure vent holes allow easier connections especially with liquids.
7. Hardened wear points and solid barstock construction provide long life for these quality couplings. Precision machined surfaces resist the effects of mechanical shocks, even in rugged use.
8. Interchangeability. Saflomatic couplers are used with industrial interchange nipples conforming to MIL-C4109.

Specifications

	Body Size			
	1/4	**3/8**	**1/2**	**3/4**
Rated Pressure (psi)	300	300	300	300
Temperature Range				
Nitrile	-40°F to 250°F			
Ethylene Propylene	-65°F to 400°F			
Fluorocarbon	-30°F to 400°F			
Locking Device	3 pawls	4 pawls	5 pawls	6 pawls
Vacuum Data (inches Hg)*				
Disconnected (coupler only)	Not recommended			
Connected	27.4	27.4	27.4	27.4

* Couplings for vacuum service should be 100% tested – an extra cost service. Consult factory.

Performance

Saflomatic
1/4" to 3/4"

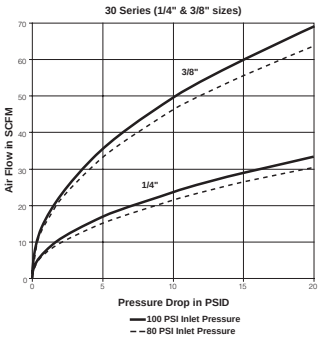

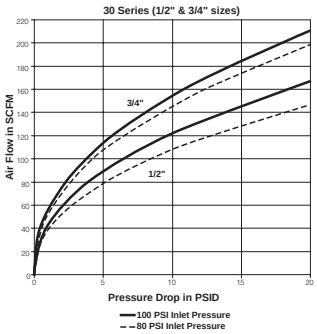

Parker Hannifin Corporation
Pneumatic Division
Richland, Michigan
www.parker.com/pneumatics

Female Pipe Thread

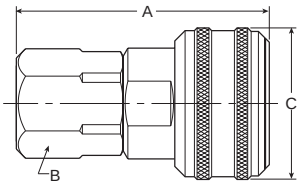

Body Size (Inches)	Part No. Brass	Thread Size	Overall Length A	Hex Size B	Largest Diameter C
1/4	B33A	1/8-27	1.96	0.75	1.20
1/4	B33	1/4-18	1.96	0.75	1.20
1/4	B33E	3/8-18	2.03	0.81	1.20
3/8	B35C	1/4-18	2.26	0.88	1.39
3/8	B35	3/8-18	2.33	0.88	1.39
3/8	B35F	1/2-14	2.57	1.00	1.39
1/2	B37E	3/8-18	2.76	1.00	1.52
1/2	B37	1/2-14	3.00	1.00	1.52
1/2	B37G	3/4-14	3.12	1.25	1.52
3/4	B39F	1/2-14	2.85	1.31	1.90
3/4	B39	3/4-14	2.99	1.31	1.90
3/4	B39J	1-11½	3.18	1.56	1.90

Male Pipe Thread

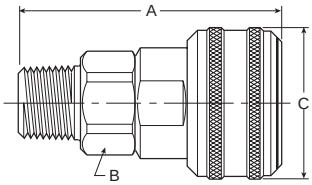

Body Size (Inches)	Part No. Brass	Thread Size	Overall Length A	Hex Size B	Largest Diameter C
1/4	B32A	1/8-27	2.03	0.75	1.20
1/4	B32	1/4-18	2.18	0.75	1.20
1/4	B32E	3/8-18	2.18	0.75	1.20
3/8	B34C	1/4-18	2.38	0.88	1.39
3/8	B34	3/8-18	2.44	0.88	1.39
3/8	B34F	1/2-14	2.57	0.88	1.39
1/2	B36E	3/8-18	2.92	1.00	1.52
1/2	B36	1/2-14	3.09	1.00	1.52
1/2	B36G	3/4-14	3.12	1.13	1.52
3/4	B38	3/4-14	2.95	1.31	1.90
3/4	B38J	1-11½	3.12	1.31	1.90

NOTE: To indicate Fluorocarbon seals, add the letter Y as a suffix to the catalog number of the coupler. To indicate Ethylene Propylene seals, add the letter W as a suffix to the catalog number of the coupler.
Example: B33AY or B33AW

Standard Hose Barb

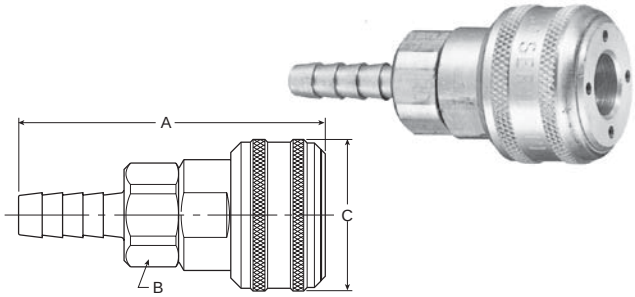

Body Size (Inches)	Part No. Brass	Hose I.D.	Overall Length A	Hex Size B	Largest Diameter C
1/4	B30-3B	1/4	2.62	0.75	1.20
1/4	B30-4B	5/16	2.62	0.75	1.20
1/4	B30-5B	3/8	2.62	0.75	1.20
3/8	B34-5B	3/8	2.85	0.88	1.39
3/8	B34-6B	1/2	2.85	0.88	1.39
1/2	B36-6B	1/2	3.33	1.00	1.52
1/2	B36-7B	3/4	3.86	1.00	1.52
3/4	B38-7B	3/4	3.69	1.31	1.90
3/4	B38-8B	1	3.93	1.31	1.90

Push-Lok Hose Barb*

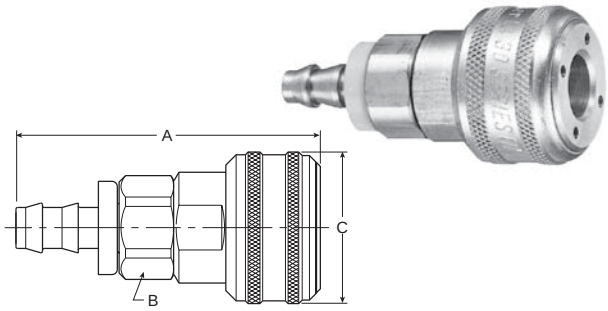

Body Size (Inches)	Part No. Brass	Hose I.D.	Overall Length A	Hex Size B	Largest Diameter C
1/4	B30-3BP	1/4	2.45	0.75	1.20
1/4	B30-5BP	3/8	2.60	0.75	1.20
3/8	B34-5BP	3/8	2.82	0.88	1.39
1/2	B36-6BP	1/2	3.46	1.00	1.52

* Push-Lok hose barbs are designed for use with push-lok hose and do not require clamps.

NOTE: To indicate Fluorocarbon seals, add the letter Y as a suffix to the catalog number of the coupler.
Example: B30-3BY

Repair Kits

Body Size	Nitrile	Fluorocarbon	Ethylene Propylene
1/4	21K	21KY	21KW
3/8	14K	14KY	14KW
1/2	16K	16KY	16KW
3/4	38K	38KY	38KW

Parker Hannifin Corporation
Pneumatic Division
Richland, Michigan
www.parker.com/pneumatics

Description

Economatic couplings feature the tubular valve in a coupler body that interchanges with ARO 210 and similar design couplers and nipples. Economatic couplings are available only in 1/4" body size, but include 3/8" thread size. Economatic couplings have brass bodies with steel sleeves and valves for durability. Standard seal material is Nitrile.

Specifications

Body Size: 1/4"

Rated Pressure: 300 psi

Temperature Range (Standard Seals): -40°F to 250°F

Locking Device: 4 balls

Couplers Female Pipe Thread

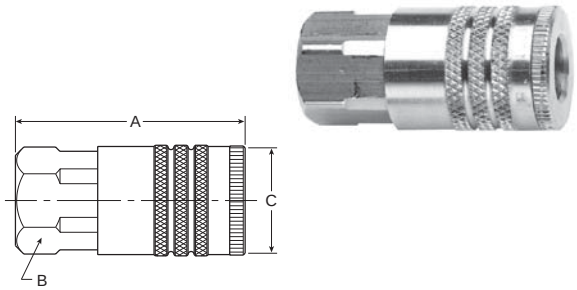

Body Size (Inches)	Part No. Brass	Thread Size	Overall Length A	Hex Size B	Largest Diameter C
1/4	B53	1/4-18 NPTF	1.83	0.75	0.90
1/4	B53E	3/8-18 NPTF	1.95	0.81	0.94

Couplers Push-Lok Hose Barb*

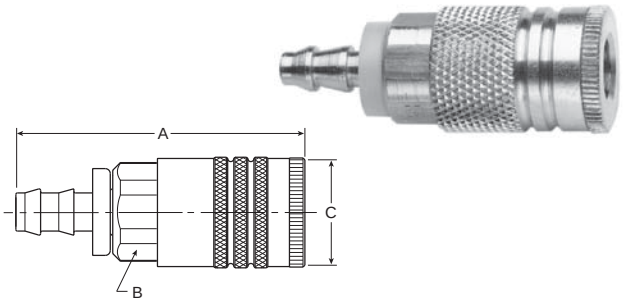

Body Size (Inches)	Part No. Brass	Hose I.D.	Overall Length A	Hex Size B	Largest Diameter C
1/4	B50-03BP	1/4	2.32	0.75	0.90
1/4	B50-05BP	3/8	2.47	0.75	0.90

* Push-Lok hose barbs are designed for use with push-lok hose and do not require clamps.

Couplers Male Pipe Thread

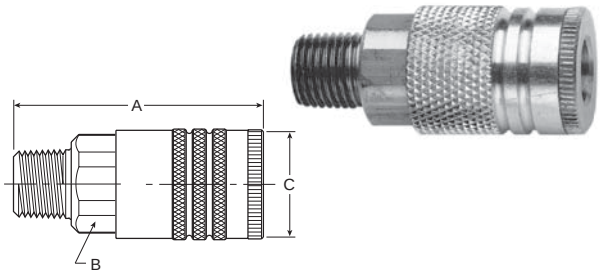

Body Size (Inches)	Part No. Brass	Thread Size	Overall Length A	Hex Size B	Largest Diameter C
1/4	B52	1/4-18	2.05	0.75	0.90
1/4	B52E	3/8-18	2.08	0.75	0.90

Flow Chart

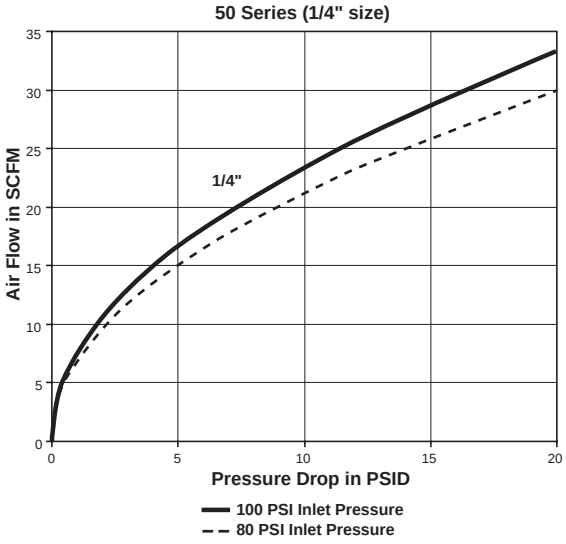

Parker Hannifin Corporation
Pneumatic Division
Richland, Michigan
www.parker.com/pneumatics

Nipples
Female Pipe Thread

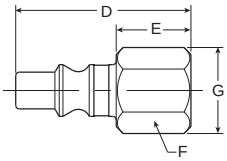

Body Size (Inches)	Part No. Steel	Thread Size	Overall Length D	Exposed Length* E	Hex Size F	Largest Diameter G
1/4	A3C	1/4-18	1.47	0.66	0.62	0.72

* This dimension represents portion of nipple that is exposed when nipple is inserted in coupler.

Nipples
Standard Hose Barb

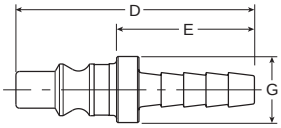

Body Size (Inches)	Part No. Steel	Hose I.D.	Overall Length D	Exposed Length* E	Largest Diameter G
1/4	A8C	1/4	1.63	0.85	0.43

* This dimension represents portion of nipple that is exposed when nipple is inserted in coupler.

Nipples
Male Pipe Thread

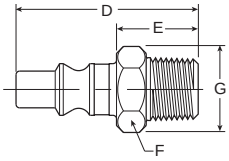

Body Size (Inches)	Part No. Steel	Thread Size	Overall Length D	Exposed Length* E	Hex Size F	Largest Diameter G
1/4	A2C	1/4-18	1.62	0.82	0.56	0.65

* This dimension represents portion of nipple that is exposed when nipple is inserted in coupler.

Nipples
Push-Lok Hose Barb**

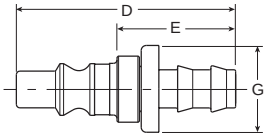

Body Size (Inches)	Part No. Steel	Hose I.D.	Overall Length D	Exposed Length* E	Largest Diameter G
1/4	A8CP	1/4	1.65	0.87	0.43

* This dimension represents portion of nipple that is exposed when nipple is inserted in coupler.

** Push-Lok barbs are designed for use with push-lok hose and do not require clamps.

Parker Hannifin Corporation
Pneumatic Division
Richland, Michigan
www.parker.com/pneumatics

Hose & Fittings

Section M

General Purpose Hose.....M2
Push-on Hose Fittings
Basic Features.....M3
Part Numbers & Dimensions M4-M6

Parker Hannifin Corporation
Pneumatic Division
Richland, Michigan
www.parker.com/pneumatics

Push-on Hose 801 Push-Lok Plus

The Push-Lok Plus line is the most versatile general purpose hose available. It can be used in numerous applications where low-pressure media is used.

Features and Benefits

- Widest fluid compatability and application range
- Broadest size range (-4 through -16)
- Highest working pressure in all sizes in the industry

Construction

- Inner tube: Synthetic Rubber
- Reinforcement: One Fiber Braid
- Cover: Synthetic Rubber, MSHA Accepted

Temperature

- Petroleum base hydraulic fluids, lubricating oils, and antifreeze solutions -40°F to +257°F (-40°C to +125°C)
- Water, water / oil emulsion, and water / glycol fluids up to +185°F (+85°C)
- Air up to +158°F (+70°C)

Water Service

Water, water/oil emulsion, and water/glycol hydraulic fluids up to +185°F (+85°C). Air up to +158°F (+70°C).

Fitting Recommendations

Use only with Push-on Hose Fittings and Quick Couplers with Push-lock Hose Barb.

Note: Push-Lok hose is recommended for vacuum applications but not for cooling lines in air conditioners and heat pumps, nor for hydraulic applications where extreme pulsations are encountered. Push-Lok is not recommended for any fuel.

Nomenclature

Part numbers are constructed from symbols that identify the style and size of the hose. Numbers identify the hose I.D. in 1/16's of an inch.

Example:

801 – 4 – GRA – RL

801 Series
Size 1/4" I.D. (4/16)
Color
Length

Note: 801-10-GRN-RL Not Available

Available Cover Colors

- GRA = gray
- RED = red
- YEL = yellow
- BLU = blue
- GRN = green
- BLK = black

Hose Length

Hose Type	I.D.	Reel Length
801-4	1/4"	600 feet
801-6	3/8"	450 feet
801-8	1/2"	300 feet
801-10	5/8"	250 feet
801-12	3/4"	200 feet
801-16	1"	200 feet

Dimensions & Specifications

#	Hose I.D.		Hose O.D.		Working Pressure		Burst Pressure		Minimum Bend Radius		Weight		Vacuum Rating	
Part No.	Inch	mm	Inch	mm	PSI	MPa	PSI	MPa	Inch	mm	lbs/ft	kg/m	Inches of Hg	kPa
801-4	1/4	6,3	0.50	12,7	350	2.4	1000	6,8	2-1/2	65	0.09	0.13	28	95
801-6	3/8	10	0.63	15,9	350	2.4	1000	6,8	3	75	0.11	0.16	28	95
801-8	1/2	12,5	0.78	19,8	300	2.1	1000	6,8	5	125	0.18	0.27	28	95
801-10	5/8	16	0.91	23,0	300	2.1	1000	6,8	6	150	0.19	0.28	15	51
801-12	3/4	19	1.03	26,2	300	2.1	1000	6,8	7	180	0.24	0.36	15	51
801-16	1	25	1.28	32,6	200	1.4	700	4,8	10	250	0.37	0.55	15	51

Parker Hannifin Corporation
Pneumatic Division
Richland, Michigan
www.parker.com/pneumatics

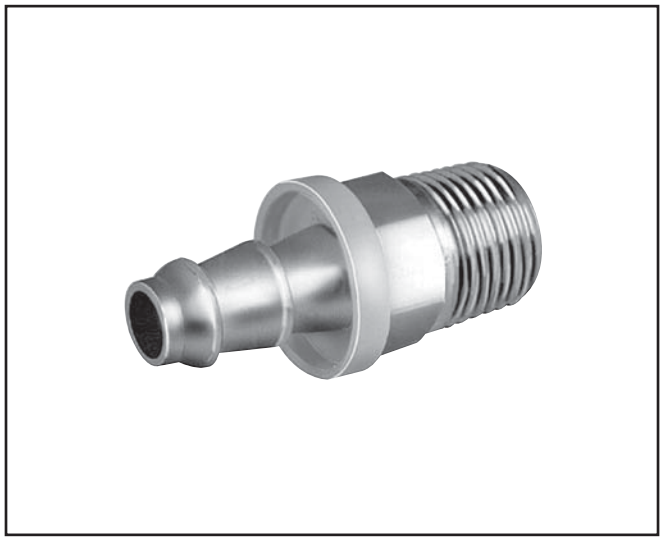

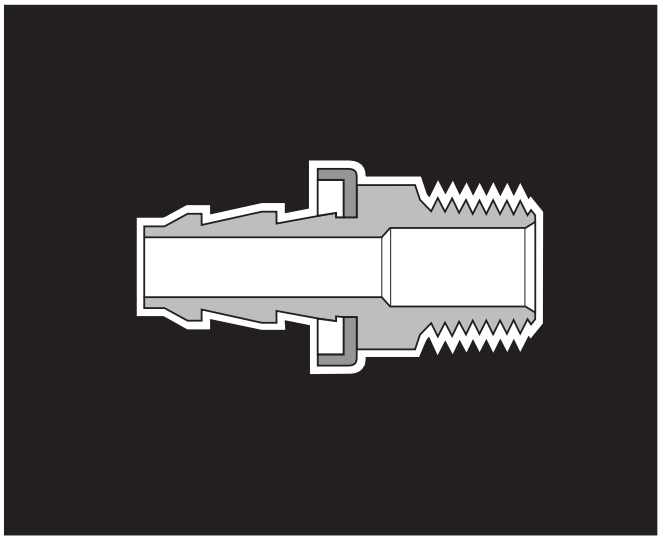

Advantages
Push-on Hose Fittings are machined from the highest quality brass or stainless steel. The barbs are specifically engineered to work in conjunction with the I.D. and braid angle of Push-on Hose, ensuring a tight connection **without clamps.**

Assembly
Push-on Hose Fittings are designed only for use with Push-on Hose. Do not use with any other style or manufacturer of hose.

Assembly Instructions:
1. Cut hose cleanly and squarely to length.
2. Lubricate hose I.D. and barbs with light oil or soapy water.
3. Push the hose onto the fitting until it bottoms against the yellow stop ring. This ensures that all of the barbs are engaged with the hose and will also help keep the end of the hose from fraying.
4. ⚠ **CAUTION: Use of clamps may damage sealing integrity of Hose and Fitting Assembly.**

Temperature Range
-40°F to 180°F (-40°C to 82°C)

Limited by media through hose assembly.

Pressure Range
Limited by hose I.D.

Nomenclature
Part numbers are constructed from symbols that identify the style, size and material of the fitting.

Example:

301 82 – 4 – 4 B

- Male Connector — 301
- Push-on Series — 82
- Pipe Thread Size (4/16) 1/4" Pipe — 4
- Hose I.D. Size (4/16) 1/4" I.D. — 4
- Brass Material (Blank Steel) — B

Parker Hannifin Corporation
Pneumatic Division
Richland, Michigan
www.parker.com/pneumatics

30182 Push-on Hose Barb to Male Pipe

# Part No.	Thread Inch		Hose Size Inch		A Inch	A mm	H Inch	B Inch	B mm
30182-2-4B	1/8 x 27	-2	1/4	-4	1.39	35	7/16	.64	16
30182-4-4B	1/4 x 18	-4	1/4	-4	1.57	40	9/16	.82	21
30182-4-6B	1/4 x 18	-4	3/8	-4	1.78	45	9/16	.88	22
30182-6-6B	3/8 x 18	-6	3/8	-6	1.78	45	11/16	.88	22
30182-8-6B	1/2 x 14	-8	3/8	-6	2.03	52	7/8	1.13	29
30182-6-8B	3/8 x 18	-6	1/2	-8	1.93	49	11/16	.88	22
30182-8-8B	1/2 x 14	-8	1/2	-8	2.18	55	7/8	1.13	29
30182-8-10B	1/2 x 14	-8	5/8	-10	2.58	66	7/8	1.13	29
30182-12-8B	3/4 x 14	-12	1/2	-8	2.21	56	1-1/16	1.16	29
30182-12-12B	3/4 x 14	-12	3/4	-12	2.61	66	1-1/16	1.16	29

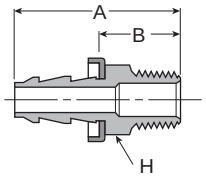

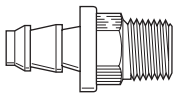

30282 Push-on Hose Barb to Female Pipe

# Part No.	Thread Inch		Hose Size Inch		A Inch	A mm	H Inch	B Inch	B mm
30282-4-4B	1/4 x 18	-4	1/4	-4	1.56	40	3/4	.81	21
30282-6-6B	3/8 x 18	-6	3/8	-6	1.82	46	7/8	.92	23
30282-8-8B	1/2 x 14	-8	1/2	-8	2.16	55	1-1/16	1.11	28

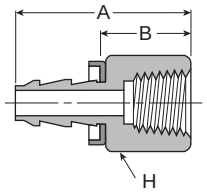

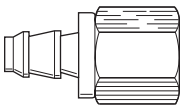

30482 Push-on Hose Barb to Male SAE 45°

# Part No.	Thread Inch			Hose Size Inch		A Inch	A mm	H Inch	B Inch	B mm
30482-4-4B	1/4	7/16 x 20	-4	1/4	-4	1.51	38	7/16	0.76	19
30482-5-4B	5/16	1/2 x 20	-5	1/4	-4	1.61	41	9/16	0.86	22
30482-6-6B	3/8	5/8 x 18	-6	3/8	-6	1.84	47	5/8	0.94	24
30482-8-8B	1/2	3/4 x 16	-8	1/2	-8	2.15	55	3/4	1.1	28

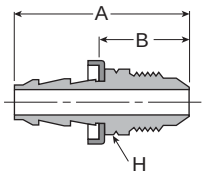

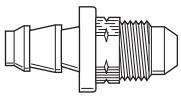

Parker Hannifin Corporation
Pneumatic Division
Richland, Michigan
www.parker.com/pneumatics

30682 Push-on Hose Barb to Female SAE JIC 37° Swivel

# Part No.	Thread Inch			Hose Size Inch		A Inch	A mm	H Inch	B Inch	B mm
30682-4-4B	1/4	7/16 x 20	-4	1/4	-4	1.52	39	9/16	0.77	20
30682-5-4B	5/16	1/2 x 12	-5	1/4	-4	1.58	40	5/8	0.83	21
30682-6-6B	3/8	9/16 x 18	-6	1/4	-4	1.61	41	11-16	0.86	22
30682-8-6B	1/2	3/4 x 16	-8	3/8	-6	1.87	47	7/8	0.97	25
30682-8-8B	1/2	3/4 x 16	-8	1/2	-8	2.02	51	7/8	0.97	25
30682-10-8B	5/8	7/8 x 14	-10	1/2	-8	2.14	54	1	1.09	28
30682-10-10B	5/8	7/8 x 14	-10	5/8	-10	2.54	65	1	1.09	28
30682-12-12B	3/4	1-1/16 x 12	-12	3/4	-12	2.65	67	1-1/4	1.2	30

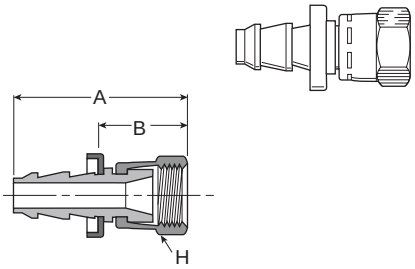

30882 Push-on Hose Barb to Female SAE 45° Swivel

# Part No.	Thread Inch			Hose Size Inch		A Inch	A mm	H Inch	B Inch	B mm
30882-4-4B	1/4	7/16 x 20	-4	1/4	-4	1.52	39	9/16	0.76	19
30882-5-4B	5/16	1/2 x 20	-5	1/4	-4	1.58	40	5/8	0.83	21
30882-6-6B	3/8	5/8 x 18	-6	3/8	-6	1.81	46	3/4	0.91	23
30882-8-6B	1/2	3/4 x 16	-8	3/8	-6	1.87	47	7/8	0.97	25
30882-8-8B	1/2	3/4 x 16	-8	1/2	-8	2.02	51	7/8	0.97	25
30882-10-8B	5/8	7/8 x 14	-10	1/2	-8	2.14	54	1	1.09	28
30882-10-10B	5/8	7/8 x 14	-10	5/8	-10	2.54	65	1	1.09	28
30882-12-12B	3/4	1-1/16 x 14	-12	3/4	-12	2.65	67	1-1/4	1.19	30

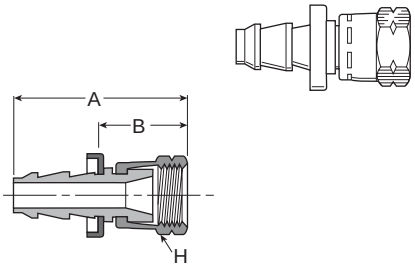

31382 Push-on Hose Barb to Male Pipe Swivel

# Part No.	Thread Inch		Hose Size Inch		A Inch	A mm	H Inch	B Inch	B mm
31382-4-4	1/4 x 18	-4	1/4	-4	1.6	41	9/16	.85	22
31382-6-6	3/8 x 18	-6	3/8	-6	1.79	45	11/16	.89	23
31382-8-8*	1/2 x 14	-8	1/2	-8	2.2	56	7/8	1.15	29

* Steel

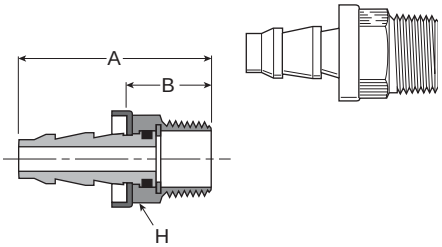

Parker Hannifin Corporation
Pneumatic Division
Richland, Michigan
www.parker.com/pneumatics

37G82 Push-on Hose Barb to Female Pipe (NPSM) Swivel with Gasket

# Part No.	Gasket	Thread Inch		Hose Size Inch		A Inch	A mm	H Inch	B Inch	B mm
37G82-4-4	07G-4	1/4- 18	-4	1/4	-4	1.55	39	11/16	0.80	20
37G82-4-6	07G-4	1/4- 18	-4	3/8	-6	1.7	43	11/16	0.80	20
37G82-6-6	07G-6	3/8- 18	-6	3/8	-6	1.75	44	7/8	0.85	22
37G82-8-8	07G-8	1/2- 14	-8	1/2	-8	2.07	53	1	1.02	26
37G82-8-10	07G-8	1/2- 14	-8	5/8	-10	2.47	63	1	1.02	26
37G82-12-12	07G-12	3/4- 14	-12	3/4	-12	2.54	65	1-1/4	1.09	28

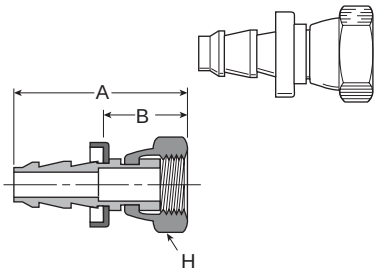

38282 Push-on Hose Barb Union

# Part No.	Hose Size Inch		A Inch	A mm
38282-4-4B	1/4	-4	1.80	46
38282-6-6B	3/8	-6	2.15	55
38282-8-8B	1/2	-8	2.51	64

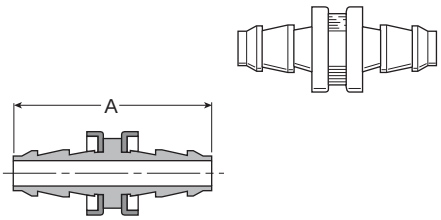

Parker Hannifin Corporation
Pneumatic Division
Richland, Michigan
www.parker.com/pneumatics

Tubing & Fittings

Section N

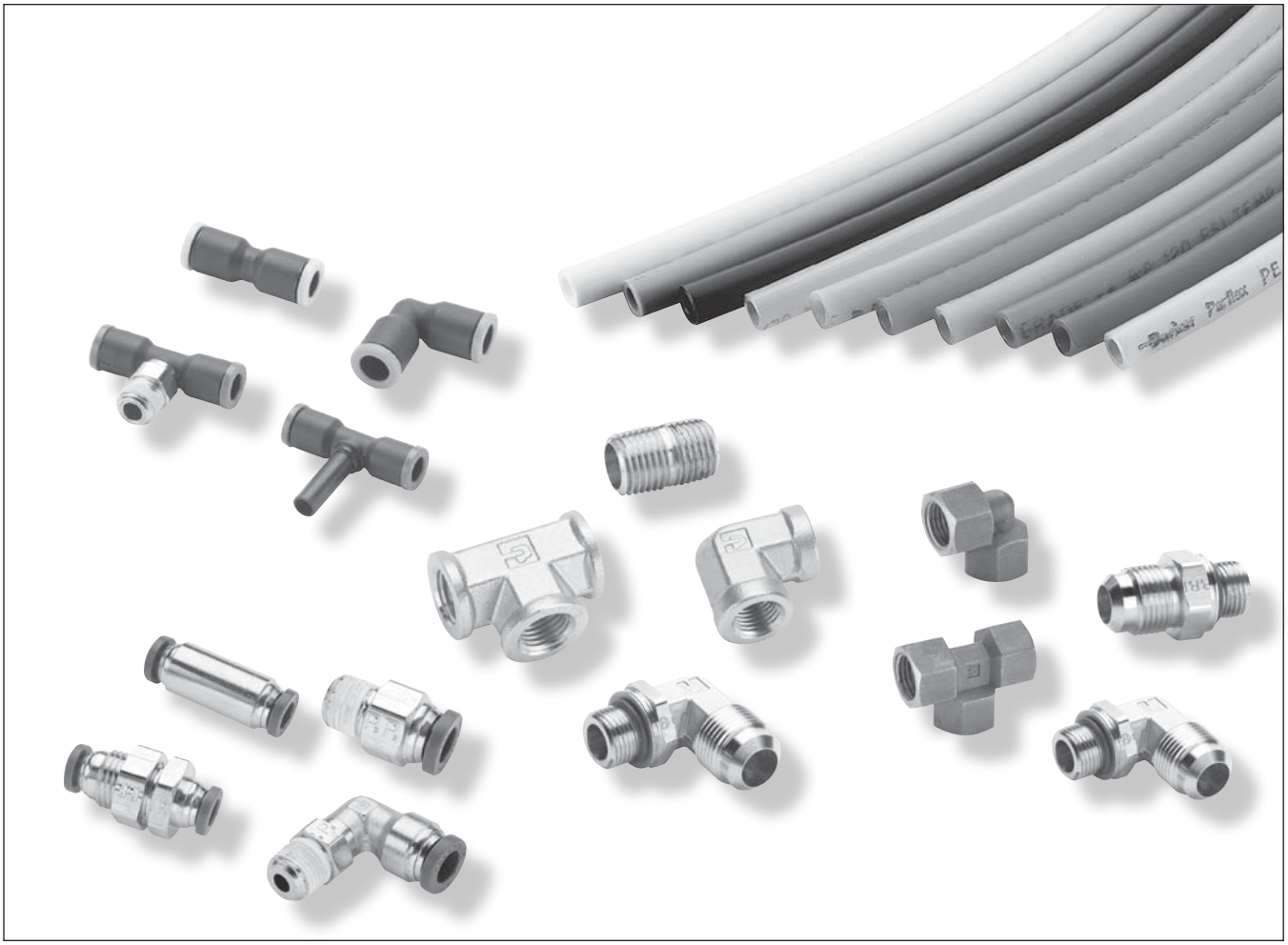

Polyethylene Tubing N2-N3
Nylon Tubing N4-N5
Polyurethane Tubing N6
Push-to-Connect,
Prestolok Composite Fittings N8-N25
Prestolok Metal Fittings N26-N37
Pipe Fittings N38-N43
Metric Adapters N44-N45

Parker Hannifin Corporation
Pneumatic Division
Richland, Michigan
www.parker.com/pneumatics

Advantages
Chemical resistant, flexible, low cost, eight colors, five tube sizes and choice of reel lengths.

Construction
Flexible polyethylene thermoplastic tubing is extruded from high molecular weight resin for increased dimensional stability, uniformity and long-term strength. Its resistance to environmental stress cracking greatly exceeds that of ordinary polyethylene tubing as measured by ASTM D-1693, (10% IGEPAL).

Applications & Approvals
Polyethylene tubing is available in black as well as seven coding colors as recommended by the Instrument Society of America. Black (EB) tubing contains an ultra-violet inhibitor which is recommended for use in sunlit areas. Ingredients of natural and color tubing (except black) listed below meet FDA requirements for food contact applications. All tubing conforms to ASTM D-1248, Type I, Class A, Category 4, Grade E5.

Temperature Range
Suggested operating temperature range is -80°F to 150°F (-62°C to 66°C).

Fitting Recommendation
- Brass fittings

Nomenclature
Part numbers are constructed from symbols that identify the style and size of the fitting. Letters identify style and material. Numbers identify size in 1/16's of an inch.

Example:

E - 6 4 - Y - 0500

- Polyethylene
- 3/8" (6/16) Tube O.D.
- 1/4" (4/16) Tube I.D.
- Color, Yellow
- Reel Footage

E Instrument Grade Tubing

Part Number	Color	O.D.	I.D.	Wall	Reel Length Feet	Working Pressure psi at 73°F	Min. Burst psi at 73°F	Min. Bend Radius Inches	Weight Per 100 Feet
E-43-0100	Natural	1/4	.170	.040	100	120	625	1	1.1
E-43-0500	Natural	1/4	.170	.040	500	120	625	1	1.1
E-43-1000	Natural	1/4	.170	.040	1000	120	625	1	1.1
EB-43-0100	Black	1/4	.170	.040	100	120	625	1	1.1
EB-43-0500	Black	1/4	.170	.040	500	120	625	1	1.1
EB-43-1000	Black	1/4	.170	.040	1000	120	625	1	1.1
E-43-R-0100	Red	1/4	.170	.040	100	120	625	1	1.1
E-43-R-0500	Red	1/4	.170	.040	500	120	625	1	1.1
E-43-B-0100	Blue	1/4	.170	.040	100	120	625	1	1.1
E-43-B-0500	Blue	1/4	.170	.040	500	120	625	1	1.1
E-43-O-0500	Orange	1/4	.170	.040	500	120	625	1	1.1
E-43-Y-0500	Yellow	1/4	.170	.040	500	120	625	1	1.1
E-43-P-0500	Purple	1/4	.170	.040	500	120	625	1	1.1
E-43-G-0500	Green	1/4	.170	.040	500	120	625	1	1.1
E-53-0500	Natural	5/16	.187	.062	500	145	800	1-1/8	2.1
EB-53-0500	Black	5/16	.187	.062	500	145	800	1-1/8	2.1
E-64-0100	Natural	3/8	.250	.062	100	125	675	1-1/4	2.5
E-64-0500	Natural	3/8	.250	.062	500	125	675	1-1/4	2.5
EB-64-0100	Black	3/8	.250	.062	100	125	675	1-1/4	2.5
EB-64-0500	Black	3/8	.250	.062	500	125	675	1-1/4	2.5
E-64-R-0500	Red	3/8	.250	.062	500	125	675	1-1/4	2.5
E-64-B-0500	Blue	3/8	.250	.062	500	125	675	1-1/4	2.5
E-64-O-0500	Orange	3/8	.250	.062	500	125	675	1-1/4	2.5
E-64-Y-0500	Yellow	3/8	.250	.062	500	125	675	1-1/4	2.5
E-64-P-0500	Purple	3/8	.250	.062	500	125	675	1-1/4	2.5
E-64-G-0500	Green	3/8	.250	.062	500	125	675	1-1/4	2.5
E-86-0100	Natural	1/2	.375	.062	100	90	425	2-1/2	3.6
EB-86-0100	Black	1/2	.375	.062	100	90	425	2-1/2	3.6
E-108-0100	Natural	5/8	.500	.062	100	70	325	4	4.6
EB-108-0100	Black	5/8	.500	.062	Coil	70	325	4	4.6

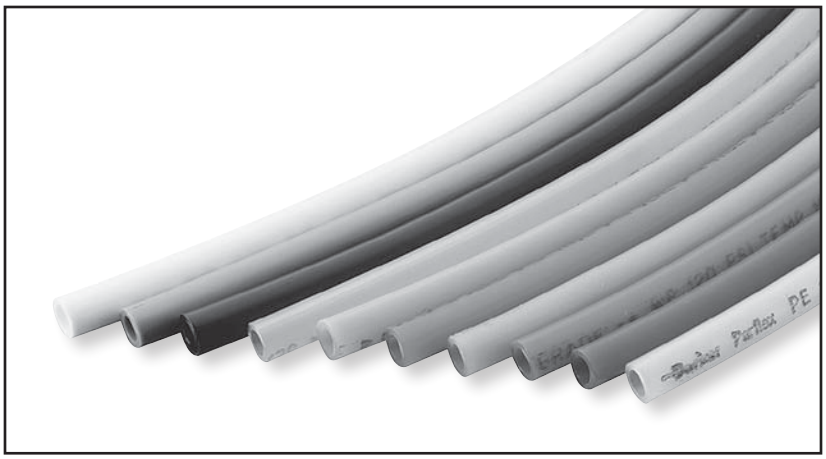

Parker Hannifin Corporation
Pneumatic Division
Richland, Michigan
www.parker.com/pneumatics

PEFR Flame Resistant Tubing

Part Number	Color	O.D.	I.D.	Wall	Reel Length Feet	Working Pressure psi at 73°F	Min. Burst psi at 73°F	Min. Bend Radius Inches	Weight Per 100 Feet
PEFR-2.5-0500	Black	5/32	.096	.030	500	225	900	1/2	.56
PEFR-4-0500	Black	1/4	.170	.040	500	160	650	3/4	1.24
PEFR-4-1000	Black	1/4	.170	.040	1000	160	650	3/4	1.24
PEFR-6-0500	Black	3/8	.250	.062	500	195	780	1-1/2	2.90
PEFR-8-0250	Black	1/2	.375	.062	250	135	540	1-3/4	4.05

Construction & Approvals

Flame resistant polyethylene is manufactured from a distinctively formulated compound which meets the UL94 V-2 flame classification. It also meets the flame spread, fuel contribution and smoke density requirements of the ASTM E84-81a tunnel test.

Applications

Parker series FRPE tubing is the preferred product for pneumatic control applications in the heating - ventilating - air conditioning - energy conservation industry. It is also suitable for use in petrochemical plants, petroleum refineries, pulp and paper mills, mines, steel mills and other industries where protection against intermittent flame and hot sparks is necessary.

Temperature Range

Suggested operating temperature range is -85°F to 150°F (-65°C to +66°C).

Nomenclature

Order by tubing part number and name.

Example:

PE FR 4 - 0500

Polyethylene — PE
Flame Resistant — FR
1/4" (4/16) Tube O. D. — 4
Reel Footage — 0500

Parker Hannifin Corporation
Pneumatic Division
Richland, Michigan
www.parker.com/pneumatics

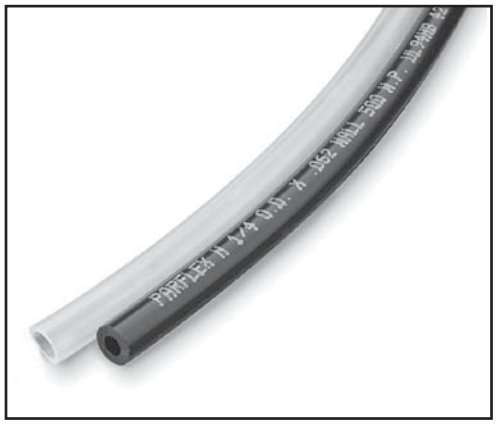

Advantages

Flexible nylon tubing is carefully made from high-grade, abrasion-resistant, heat-and light-stabilized nylon. Resistance to stress-cracking greatly exceeds that of ordinary nylon tubing. Extremely low level water absorption.

Chemical-resistant nylon tubing has the additional benefits of better flexibility, lighter weight and resistance to flexural fatigue.

Colors

Available in natural (NN) and black (NB). Black tubing is recommended for use outdoors and in sunlit areas.

Temperature Range

Operating temperatures, depending upon conditions, are -65°F to 200°F (-54°C to 93°C) continuous.

Fitting Recommendations

• Brass fittings

Nomenclature

Order by tubing part number and name.

Example:

N N - 2 - 016

Nylon

Color Natural

1/8" (2/16) Tube O. D.

Wall Thickness (in thousandths of an inch)

N Flexible Tubing

Nylon Part No.	Color	Nom. Tube O.D.	Nom. Tube I.D.	Average Wall Thick.	*Min. Burst Pressure at 73°F psi	Min. Bend Radius Inches	Std. Reel Length Feet
NN-2-016	Natural	1/8	.093	.016	1000	1/4	250
NB-2-016	Black	1/8	.093	.016	1000	1/4	250
NN-2-031	Natural	1/8	.064	.031	2000	1/4	250
NB-2-031	Black	1/8	.064	.031	2000	1/4	250
NN-2.5-025	Natural	5/32	.106	.025	1200	1/2	250
NB-2.5-025	Black	5/32	.106	.025	1200	1/2	250
NN-3-025	Natural	3/16	.138	.025	1000	5/8	250
NB-3-025	Black	3/16	.138	.025	1000	5/8	250
NN-3-046	Natural	3/16	.096	.046	2000	7/16	250
NB-3-046	Black	3/16	.096	.046	2000	7/16	250
NN-4-035	Natural	1/4	.180	.035	1000	7/8	250
NB-4-035	Black	1/4	.180	.035	1000	7/8	250
NN-4-040	Natural	1/4	.170	.040	1250	7/8	250
NB-4-040	Black	1/4	.170	.040	1250	7/8	250
NN-4-062	Natural	1/4	.127	.062	2000	1/2	250
NB-4-062	Black	1/4	.127	.062	2000	1/2	250
NN-5-040	Natural	5/16	.233	.040	1250	1-1/8	250
NB-5-040	Black	5/16	.233	.049	1250	1-1/8	250
NN-6-050	Natural	3/8	.275	.050	1250	1-1/8	250
NB-6-050	Black	3/8	.275	.050	1250	1-1/8	250
NN-6-093	Natural	3/8	.190	.093	2000	3/4	250
NB-6-093	Black	3/8	.190	.093	2000	3/4	250
NN-8-062	Natural	1/2	.375	.062	1000	1-1/4	250
NB-8-062	Black	1/2	.375	.062	1000	1-1/4	250
NN-8-124	Natural	1/2	.253	.124	2000	1	250
NB-8-124	Black	1/2	.253	.124	2000	1	250

*Suggested working pressure is 1/4 of burst pressure.

Parker Hannifin Corporation
Pneumatic Division
Richland, Michigan
www.parker.com/pneumatics

Advantages

Series NR semi-rigid nylon tubing offers better chemical resistance than series N, good resistance to high ambient temperature and low moisture absorption. NR has a high tensile strength which will give excellent coupling retention in high pressure, temperature and vibration environments.

Construction

Parker series NR tubing is manufactured from a semi-rigid nylon II material. The tubing does not contain plasticizers.

Applications & Approvals

NR tubing is specified for machine tool lubricating systems, marine control systems, process lines for chemicals and oils and other applications requiring a high quality nylon tube.

Temperature Range

The recommended operating temperature range for service at rated pressures with compatible fluids is -60°F to 200°F (-51°C to 93°C).

Fitting Recommendations

• Brass fittings

Nomenclature

Order by tubing part number and name.

Example:

N B R 2 016

- Nylon — N
- Color, Black — B
- Rigid — R
- 1/8" (2/16) Tube O.D. — 2
- Wall Thickness (in thousandths of an inch) — 016

NR Semi-rigid High Strength Tubing

Nylon Part No.	Color	Nom. Tube O.D.	Nom. Tube I.D.	Average Wall Thick.	*Min. Burst Pressure at 73°F psi	Min. Bend Radius Inches	Std. Reel Length Feet
NNR-2-017	Natural	1/8	.091	.017	1700	1/2	500
NBR-2-017	Black	1/8	.091	.017	1700	1/2	500
NNR-2-026	Natural	1/8	.073	.026	2500	3/8	500
NBR-2-026	Black	1/8	.073	.026	2500	3/8	500
NNR-3-024	Natural	3/16	.140	.024	1700	3/4	500
NBR-3-024	Black	3/16	.140	.024	1700	3/4	500
NNR-3-039	Natural	3/16	.110	.039	2500	5/8	500
NBR-3-039	Black	3/16	.110	.039	2500	5/8	500
NNR-4-035	Natural	1/4	.180	.035	1700	1	250
NBR-4-035	Black	1/4	.180	.035	1700	1	250
NNR-4-050	Natural	1/4	.150	.050	2500	7/8	250
NBR-4-050	Black	1/4	.150	.050	2500	7/8	250
NNR-5-040	Natural	5/16	.233	.040	1700	1-1/2	250
NBR-5-040	Black	5/16	.233	.040	1700	1-1/2	250
NNR-6-048	Natural	3/8	.279	.048	1700	1-3/4	250
NBR-6-048	Black	3/8	.279	.048	1700	1-3/4	250
NNR-6-075	Natural	3/8	.225	.075	2500	1-1/2	250
NBR-6-075	Black	3/8	.225	.075	2500	1-1/2	250
NNR-8-062	Natural	1/2	.376	.062	1500	2-3/8	250
NBR-8-062	Black	1/2	.376	.062	1500	2-3/8	250
NNR-8-075	Natural	1/2	.350	.075	2200	2-1/2	250
NBR-8-075	Black	1/2	.350	.075	2200	2-1/2	250

*Suggested working pressure is 1/4 of burst pressure.

PTC Plastic Tube Cutter

Part No. PTC-001

An easy to handle razor/edged tube cutter, closes automatically, assuring clean and square cuts.

May be used with polyethylene, polypropylene, nylon and other plastic tubing.

How To Use

Insert plastic tube to desired length, allow tube cutter to close, then apply pressure until tube snaps off.

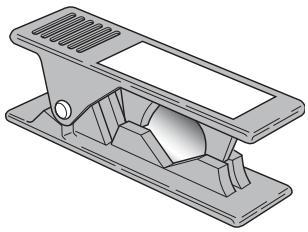

Parker Hannifin Corporation
Pneumatic Division
Richland, Michigan
www.parker.com/pneumatics

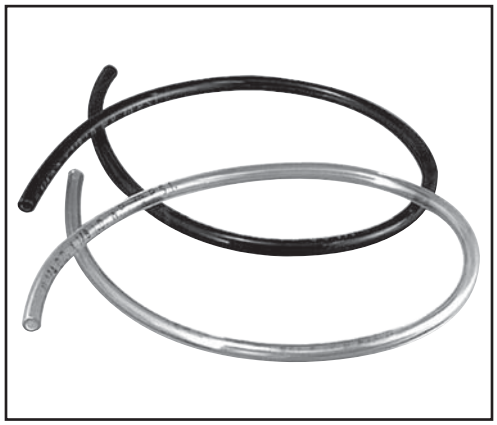

Advantages

Polyurethane tubing is a high quality, precision-made tubing used in a wide range of demanding and critical applications.

Polyether based, polyurethane tubing occupies a unique position among polymers, sharing the best properties of both rubber and plastic. Urethane exhibits the elongation and recovery characteristics of rubber and the chemical resistance associated with plastics. The tubing is tough, strong, kink-resistant and abrasion resistant, yet it's flexible and easy to assemble onto designated fittings.

- Tough
- Flexible
- Broad Temperature Range
- Eight Colors
- Abrasion Resistant
- Chemical Resistant

Applications & Approvals

Polyurethane tubing is used for a wide variety of applications. Typical usage includes air tools, robotics, pneumatic logic and actuation systems, analytical instrumentation, vacuum equipment, pressure measurement apparatus, semi-conductor equipment manufacturers and a variety of medical and laboratory applications.

Temperature Range

Suggested operating temperatures, depending upon conditions are 0°F to 200°F (-18°C to 93°C).

Fitting Recommendations

- Thermoplastic fittings
- Brass fittings

Nomenclature

Order by tubing part number and name.

Example:

U - 2 1 - BLK - 0250

- Polyurethane
- 1/8" (2/16) Tube O.D.
- 1/6" (1/16) Tube I.D.
- Color - Black
- Reel Length in Feet

U Polyether Base Tubing

Part No.*	Nom. Tube O.D.	Nom. Tube I.D.	Wall Thick.	Working** Pressure (PSI)	Burst Pressure (PSI)	Reel Length Feet
U-21-0500	1/8	1/16	1/32	125	375	500
U-21-0250						250
U-42-0500	1/4	1/8	1/16	125	375	500
U-42-0250						250
U-64-0250	3/8	1/4	1/16	125	375	250
U-64-0100						100 (coil)
U-86-0250	1/2	3/8	1/16	85	255	250
U-86-0100						100 (coil)

* Colors: Clear-Blank, Black-BLK, Green-GRN, Red-RED, Yellow-YEL, Blue-BLU, Orange-ORG, Gray-GRA

** Based on a full 4:1 safety factor.

Parker Hannifin Corporation
Pneumatic Division
Richland, Michigan
www.parker.com/pneumatics

Notes

Parker Hannifin Corporation
Pneumatic Division
Richland, Michigan
www.parker.com/pneumatics

Tube to Male NPTF	**W369PLP** Male Elbow Page N11	**W369PLPX** Extended Male Elbow Page N12	**W379PLP** Male Elbow 45° Page N12	**W372PLP** Branch Tee Swivel Page N13	**W371PLP** Male Run Tee Swivel Page N14
W68PLPSP Male Standpipe Page N15	**W368PLP** Male Y Connector Page N15	**Tube to Tube**	**32PLP** Equal Union Page N17	**365PLP** Union Elbow Page N17	**364PLP** Union Tee Page N16
362PLP Union Y Connector Page N16	**362PLPD** Double Y Connector Page N19	**24PLP** Multiple Tee Page N19	**24PLPD** Double Multiple Tee Page N20	**347PLP** Equal Cross Page N20	**32PLPRC** Connector for 2 Tubes Page N24
32PLPDRC Connector for 3 Tubes Page N24	**Tube to Female NPTF**	**377PLP** Female Branch Tee Swivel Page N13	**370PLP** Female Elbow Swivel Page N16		
Bulkhead Unions	**32PLPBH** Bulkhead Union Page N19	**365PLPBH** Equal Bulkhead Elbow Page N19	**Plug-Ins**	**369PLPSP** Plug-In Elbow Page N20	**369PLPSPX** Extended Plug-In Elbow Page N21
379PLPSP 45° Plug-In Elbow Page N21	**372PLPSP** Plug-In Branch Tee Page N21	**371PLPSP** Plug-In Run Tee Page N21	**362PLPSP** Plug-In Y Page N22	**67PLP** Tube End Reducer Page N23	**32PLPSP** Tube Expander Page N23
322PLPSP Barbed Connector Page N24	**Auxiliary Components**	**63PLP** Double Male Union Page N22	**639PLP** Plug Page N24		
Metric Tube to Male NPTF	**W369PLP** Male Elbow Page N11	**W372PLP** Male Branch Tee Swivel Page N13			

Parker Hannifin Corporation
Pneumatic Division
Richland, Michigan
www.parker.com/pneumatics

Metric Tube to Metric Tube	**32PLP** Union Page N17	**365PLP** Union Elbow Page N17	**364PLP** Union Tee Page N18	**362PLP** Union Y Connector Page N22	**362PLPD** Double Y Connector Page N19
24PLP Multiple Tee Page N19	**24PLPD** Double Multiple Tee Page N20	**347PLP** Cross Page N20	**32PLPRC** Connector for 2 Tubes 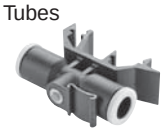 Page N24	**32PLPDRC** Connector for 3 Tubes Page N24	
Metric Bukhead Unions	**32PLPBH** Bulkhead Union Page N19	**365PLPBH** Equal Bulkhead Elbow Page N19	**Metric Tube to Female BSPP**	**370PLP** Female Elbow Page N16	
Metric Tube to Male BSPP	**369PLP** Male Elbow Page N11	**369PLPX** Male Elbow Page N12	**379PLP** 45° Male Elbow Page N12	**372PLP** Male Branch Tee Page N13	**371PLP** Male Run Tee Page N14
68PLPSP Male Standpipe Page N15	**368PLP** Male Y Connector Page N15	**368PLPD** Double Y Male Connector Page N16	**Metric Tube to Metric Straight Thread**	**369PLP** Male Elbow Page N11	**369PLPX** Male Elbow Page N12
379PLP 45° Male Elbow Page N12	**372PLP** Male Branch Tee Page N13	**371PLP** Male Run Tee Page N14	**68PLPSP** Male Standpipe Page N15	**368PLP** Male Y Connector Page N15	
Metric Plug-Ins	**369PLPSP** Plug-In Elbow Page N21	**369PLPXSP** Extended Plug-In Elbow Page N21	**379PLPSP** 45° Plug-In Elbow Page N21	**372PLPSP** Plug-In Branch Tee Page N21	**371PLPSP** Plug-In Run Tee Page N22
362PLPSP Plug-In Y Page N22	**362PLPDSP** Plug-In Multiple Y Page N22	**67PLP** Tube End Reducer Page N23	**32PLPSP** Tube Expander Page N23	**322PLPSP** Barbed Connector Page N24	

Parker Hannifin Corporation
Pneumatic Division
Richland, Michigan
www.parker.com/pneumatics

Materials of Construction	
Body:	Glass reinforced nylon 6.6
Collar:	Nylon
Gripping Ring:	Stainless Steel
D Seal:	Nitrile
O-Rings:	Nitrile
Base:	Nickel plated brass with thread sealant on tapered components and captive seal on parallel threads.

Nomenclature	
Example: W369PLP-4-2	**Attribute:**
w	White Thread Sealant
3	composite body
69	male elbow
PLP	Prestolok
4	1/4" (4/16) Tube O.D.
2	1/8" (2/16) Pipe Thread

Pressure and Temperature Range	
Gripping Ring:	-4°F to +175°F at up to 290 PSI depending on tubing
Collet Technology:	+5°F to +155°F at up to 260 PSI depending on tubing
Vacuum Capability:	28" Hg

Applicable Tube	
Tube O.D.:	1/8, 5/32, 3/16, 1/4, 5/16, 3/8, 1/2
Tube O.D. (mm):	3, 4, 6, 8, 10, 12, 14

A compact one piece push-to-connect fitting. All items in the Prestolok composite range are silicone free. The stainless steel gripping ring ensures excellent tube retention while the D seal within the fitting provides a positive seal on the O.D. of the tube, in both static and dynamic positions, due to an optimized design of the fitting cavity. Prestolok composite should not be used for live swivel applications.

Recommended Tubing
Prestolok composite fittings are designed to be used with the following tubing.

- Nylon Semi-Rigid
- Polyurethane
- Nylon
- Fluoropolymer

Assembly Instructions

1. Achieve a square cut edge with a tube cutter
2. Simply push the tubing until it can go no further. Holding and sealing is accomplished instantaneously.
3. Pull on the tubing to verify gripping action
4. To disassemble make sure there is no air flow
5. Depress the manual push button, then pull the tube out.

Parker Hannifin Corporation
Pneumatic Division
Richland, Michigan
www.parker.com/pneumatics

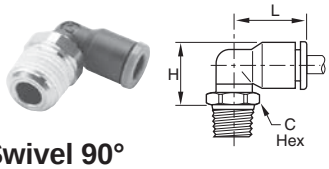

W369PLP Male Elbow Swivel 90°

Part No.	Tube Size (In.)	Thread NPT / UNF	C Hex (mm)	L	H
369PLP-2-0	1/8	10-32	8	0.57	0.52
W369PLP-2-1	1/8	1/16	10	0.57	0.53
W369PLP-2-2	1/8	1/8	11	0.57	0.53
W369PLP-2-4	1/8	1/4	14	0.57	0.55
369PLP-5/32-0	5/32	10-32	8	0.55	0.53
W369PLP-5/32-2	5/32	1/8	11	0.55	0.53
W369PLP-5/32-4	5/32	1/4	14	0.55	0.55
W369PLP-3-2	3/16	1/8	11	0.85	0.67
369PLP-4-0	1/4	10-32	11	0.71	0.63
W369PLP-4-2	1/4	1/8	11	0.71	0.67
W369PLP-4-4	1/4	1/4	14	0.71	0.63
W369PLP-4-6	1/4	3/8	18	0.71	0.65
W369PLP-5-2	5/16	1/8	11	0.91	0.75
W369PLP-5-4	5/16	1/4	14	0.91	0.71
W369PLP-5-6	5/16	3/8	18	0.91	0.73
W369PLP-6-2	3/8	1/8	15	1.08	0.91
W369PLP-6-4	3/8	1/4	15	1.08	0.91
W369PLP-6-6	3/8	3/8	18	1.08	0.87
W369PLP-6-8	3/8	1/2	22	1.08	0.91
W369PLP-8-4	1/2	1/4	20	1.38	1.22
W369PLP-8-6	1/2	3/8	20	1.38	1.22
W369PLP-8-8	1/2	1/2	24	1.38	1.12

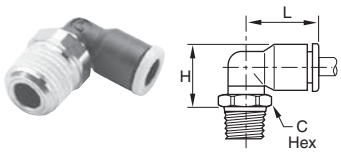

W369PLP Male Elbow

Part No.	Tube Size (mm)	Thread NPT	C Hex (mm)	H	L
W369PLP-4M-2	4	1/8	11	0.5	0.6
W369PLP-4M-4	4	1/4	14	0.6	0.6
W369PLP-6M-2	6	1/8	11	0.6	0.6
W369PLP-6M-4	6	1/4	14	0.6	0.6
W369PLP-8M-2	8	1/8	11	0.8	0.9
W369PLP-8M-4	8	1/4	14	0.7	0.9
W369PLP-8M-6	8	3/8	18	0.7	0.9
W369PLP-10M-4	10	1/4	15	0.9	1.0
W369PLP-10M-6	10	3/8	18	0.9	1.0
W369PLP-10M-8	10	1/2	22	0.9	1.0
W369PLP-12M-6	12	3/8	18	1.0	1.2
W369PLP-12M-8	12	1/2	22	1.0	1.2

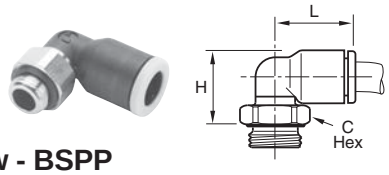

369PLP Male Elbow - BSPP

Part No.	Tube Size (mm)	BSPP / Metric	C Hex (mm)	H	L
369PLP-3M-M3	3	M3X0.5	8	15.0	14.5
369PLP-3M-M5	3	M5X0.8	8	13.5	14.5
369PLP-4M-M3	4	M3X0.5	8	15.0	14.5
369PLP-4M-M5	4	M5X0.8	8	13.5	14.0
369PLP-4M-M7	4	M7X1	10	15.0	14.0
369PLP-4M-2G	4	1/8	13	13.0	14.0
369PLP-4M-4G	4	1/4	16	13.0	14.0
369PLP-6M-M5	6	M5X0.8	8	15.5	16.0
369PLP-6M-M7	6	M7X1	10	17.5	16.0
369PLP-6M-M10	6	M10X1	13	15.0	14.0
369PLP-6M-M12	6	M12X1.5	15	15.0	16.0
369PLP-6M-2G	6	1/8	13	15.0	16.0
369PLP-6M-4G	6	1/4	16	15.0	16.0
369PLP-6M-6G	6	3/8	20	15.5	16.0
369PLP-6M-8G	6	1/2	24	16.0	16.0
369PLP-8M-M10	8	M10X1	13	20.5	23.0
369PLP-8M-M12	8	M12X1.5	15	19.5	23.0
369PLP-8M-2G	8	1/8	13	20.5	23.0
369PLP-8M-4G	8	1/4	16	18.5	23.0
369PLP-8M-6G	8	3/8	20	18.5	23.0
369PLP-8M-8G	8	1/2	24	19.0	23.0
369PLP-10M-4G	10	1/4	16	23.5	26.5
369PLP-10M-6G	10	3/8	20	22.0	26.5
369PLP-10M-8G	10	1/2	24	22.0	26.5
369PLP-12M-4G	12	1/4	16	26.5	31.0
369PLP-12M-6G	12	3/8	20	25.0	31.0
369PLP-12M-8G	12	1/2	24	25.0	31.0
369PLP-14M-6G	14	3/8	20	32.5	35.5
369PLP-14M-8G	14	1/2	24	27.0	35.5

Parker Hannifin Corporation
Pneumatic Division
Richland, Michigan
www.parker.com/pneumatics

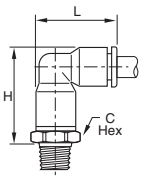

W369PLPX Extended Male Elbow

Part No.	Tube Size (In.)	Thread NPT / UNF	C Hex (mm)	H	L
369PLPX-2-0	1/8	10-32	8	0.91	0.75
W369PLPX-2-2	1/8	1/8	11	0.91	0.75
W369PLPX-2-4	1/8	1/4	14	0.93	0.75
369PLPX-5/32-0	5/32	10-32	8	0.91	0.75
W369PLPX-5/32-2	5/32	1/8	11	0.91	0.75
W369PLPX-5/32-4	5/32	1/4	14	0.93	0.75
369PLPX-4-0	1/4	10-32	11	1.10	0.93
369PLPX-4-M7	1/4	M7	9	1.17	0.93
W369PLPX-4-2	1/4	1/8	11	1.12	0.93
W369PLPX-4-4	1/4	1/4	14	1.08	0.93
W369PLPX-4-6	1/4	3/8	17	1.12	0.93
W369PLPX-5-2	5/16	1/8	13	1.32	1.16
W369PLPX-5-4	5/16	1/4	14	1.28	1.16
W369PLPX-6-2	3/8	1/8	17	1.40	1.34
W369PLPX-6-4	3/8	1/4	17	1.41	1.33
W369PLPX-6-6	3/8	3/8	18	1.45	1.33

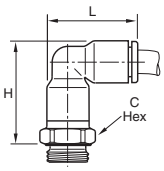

369PLPX Male Elbow - BSPP

Part No.	Tube Size (mm)	BSPP / Metric	C Hex (mm)	H
369PLPX-4M-M5	4	M5X0.8	8	23.0
369PLPX-4M-M7	4	M7X1	10	22.5
369PLPX-4M-2G	4	1/8	13	22.5
369PLPX-4M-4G	4	1/4	16	22.5
369PLPX-6M-M5	6	M5X0.8	10	27.5
369PLPX-6M-M7	6	M7X1	10	26.0
369PLPX-6M-2G	6	1/8	13	27.0
369PLPX-6M-4G	6	1/4	16	27.0
369PLPX-8M-2G	8	1/8	13	36.0
369PLPX-8M-4G	8	1/4	16	33.0
369PLPX-8M-6G	8	3/8	20	33.0
369PLPX-10M-4G	10	1/4	16	40.5
369PLPX-10M-6G	10	3/8	20	40.5
369PLPX-10M-8G	10	1/2	24	40.5
369PLPX-12M-4G	12	1/4	19	44.5
369PLPX-12M-6G	12	3/8	20	42.0
369PLPX-12M-8G	12	1/2	24	42.0
369PLPX-14M-6G	14	3/8	22	51.0
369PLPX-14M-8G	14	1/2	24	48.5

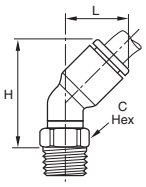

W379PLP Male Elbow 45°

Part No.	Tube Size (In.)	Thread NPT / UNF	C Hex (mm)	H	L
379PLP-2-0	1/8	10-32	8	0.91	0.49
W379PLP-2-2	1/8	1/8	11	0.81	0.49
W379PLP-4-2	1/4	1/8	11	0.98	0.57
W379PLP-4-4	1/4	1/4	14	0.98	0.57
W379PLP-4-M7	1/4	M7	9	1.14	0.57
W379PLP-6-4	3/8	1/4	17	1.36	0.91
W379PLP-6-6	3/8	3/8	18	1.36	0.91

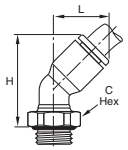

379PLP 45° Male Elbow - BSPP

Part No.	Tube Size (mm)	BSPP / M5	C Hex (mm)	H	L
379PLP-4M-M5	4	M5X0.8	8	23.0	13.0
379PLP-4M-2G	4	1/8	13	25.0	13.0
379PLP-6M-M5	6	M5X0.8	8	30.0	14.5
379PLP-6M-2G	6	1/8	13	28.5	14.5
379PLP-6M-4G	6	1/4	16	29.5	14.5
379PLP-8M-2G	8	1/8	13	36.0	19.5
379PLP-8M-4G	8	1/4	16	34.5	19.5
379PLP-8M-6G	8	3/8	20	34.5	19.5
379PLP-10M-4G	10	1/4	16	40.5	23.0
379PLP-10M-6G	10	3/8	20	39.0	23.0
379PLP-10M-8G	10	1/2	24	41.0	23.0
379PLP-12M-4G	12	1/4	16	46.0	26.0
379PLP-12M-6G	12	3/8	20	44.5	26.0
379PLP-12M-8G	12	1/2	24	46.0	26.0

Parker Hannifin Corporation
Pneumatic Division
Richland, Michigan
www.parker.com/pneumatics

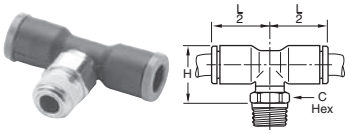

W372PLP Male Branch Tee Swivel

Part No.	Tube Size (In.)	Thread NPT / UNF	C Hex (mm)	L/2	H
372PLP-2-0	1/8	10-32	8	0.57	0.61
W372PLP-2-1	1/8	1/16	10	0.57	0.61
W372PLP-2-2	1/8	1/8	11	0.57	0.61
W372PLP-2-4	1/8	1/4	14	0.57	0.63
372PLP-5/32-0	5/32	10-32	8	0.55	0.71
W372PLP-5/32-2	5/32	1/8	11	0.55	0.61
W372PLP-5/32-4	5/32	1/4	14	0.55	0.63
W372PLP-3-2	3/16	1/8	11	0.85	0.67
W372PLP-4-2	1/4	1/8	11	0.71	0.67
W372PLP-4-4	1/4	1/4	14	0.71	0.63
W372PLP-4-6	1/4	3/8	18	0.71	0.65
W372PLP-5-2	5/16	1/8	11	0.91	0.87
W372PLP-5-4	5/16	1/4	14	0.91	0.83
W372PLP-5-6	5/16	3/8	18	0.91	0.85
W372PLP-6-2	3/8	1/8	15	1.04	0.99
W372PLP-6-4	3/8	1/4	15	1.04	0.99
W372PLP-6-6	3/8	3/8	18	1.04	0.95
W372PLP-6-8	3/8	1/2	22	1.04	0.98
W372PLP-8-4	1/2	1/4	20	1.38	1.22
W372PLP-8-6	1/2	3/8	20	1.38	1.22
W372PLP-8-8	1/2	1/2	24	1.38	1.21

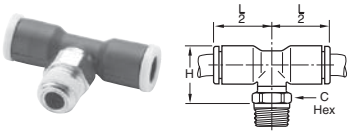

W372PLP Male Branch Tee - NPT

Part No.	Tube Size (mm)	NPT	C Hex (mm)	H	L/2
W372PLP-4M-2	4	1/8	11	0.61	0.55
W372PLP-4M-4	4	1/4	14	0.63	0.55
W372PLP-6M-2	6	1/8	11	0.69	0.63
W372PLP-6M-4	6	1/4	14	0.71	0.63
W372PLP-8M-2	8	1/8	11	0.87	0.91
W372PLP-8M-4	8	1/4	14	0.83	0.91
W372PLP-8M-6	8	3/8	18	0.85	0.91
W372PLP-10M-4	10	1/4	15	0.98	1.04
W372PLP-10M-6	10	3/8	18	0.95	1.04
W372PLP-10M-8	10	1/2	22	0.98	1.04
W372PLP-12M-6	12	3/8	18	1.06	1.22
W372PLP-12M-8	12	1/2	22	0.98	1.22

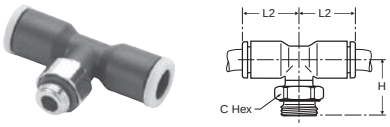

372PLP Male Branch Tee - BSPP

Part No.	Tube Size (mm)	BSPP / M5	C Hex (mm)	H	L/2
372PLP-4M-M5	4	M5X0.8	8	17.5	14.0
372PLP-4M-2G	4	1/8	13	15.0	14.0
372PLP-4M-4G	4	1/4	16	15.0	14.0
372PLP-6M-M5	6	M5X0.8	8	19.5	16.0
372PLP-6M-2G	6	1/8	13	17.0	16.0
372PLP-6M-4G	6	1/4	16	17.0	16.0
372PLP-8M-2G	8	1/8	13	23.5	23.0
372PLP-8M-4G	8	1/4	16	21.5	23.0
372PLP-8M-6G	8	3/8	20	21.5	23.0
372PLP-10M-4G	10	1/4	16	26.0	26.5
372PLP-10M-6G	10	3/8	20	24.0	26.5
372PLP-10M-8G	10	1/2	24	24.0	26.5
372PLP-12M-4G	12	1/4	16	29.0	31.0
372PLP-12M-6G	12	3/8	20	27.0	31.0
372PLP-12M-8G	12	1/2	24	27.0	31.0
372PLP-14M-6G	14	3/8	20	32.5	35.5
372PLP-14M-8G	14	1/2	24	27.0	35.5

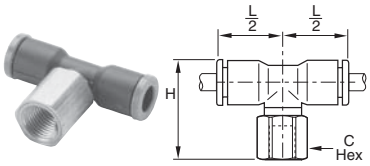

377PLP Female Branch Tee Swivel

Part No.	Tube Size (In.)	Thread NPT / UNF	C Hex (mm)	L/2	H
377PLP-2-2	1/8	1/8	13	0.57	0.99
377PLP-5/32-2	5/32	1/8	13	0.55	0.91
377PLP-5/32-4	5/32	1/4	16	0.55	1.08
377PLP-4-2	1/4	1/8	13	0.71	1.02
377PLP-4-4	1/4	1/4	16	0.71	1.18
377PLP-5-2	5/16	1/8	13	0.91	1.24
377PLP-5-4	5/16	1/4	16	0.91	1.40
377PLP-6-4	3/8	1/4	16	1.04	1.60
377PLP-8-6	1/2	3/8	22	1.38	1.88

Parker Hannifin Corporation
Pneumatic Division
Richland, Michigan
www.parker.com/pneumatics

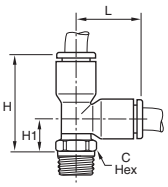

W371PLP Male Run Tee Swivel

Part No.	Tube Size (In.)	Thread NPT / UNF	C Hex (mm)	L	H	H1
371PLP-2-0	1/8	10-32	8	0.57	0.92	0.35
W371PLP-2-1	1/8	1/16	10	0.57	0.93	0.35
W371PLP-2-2	1/8	1/8	11	0.57	0.93	0.35
371PLP-5/32-0	5/32	10-32	8	0.57	1.02	0.45
W371PLP-5/32-2	5/32	1/8	11	0.57	0.93	0.53
W371PLP-5/32-4	5/32	1/4	14	0.57	0.94	0.37
W371PLP-3-2	3/16	1/8	11	0.85	1.31	0.45
W371PLP-4-2	1/4	1/8	11	0.69	1.16	0.45
W371PLP-4-4	1/4	1/4	14	0.69	1.12	0.41
W371PLP-4-6	1/4	3/8	18	0.69	1.14	0.43
W371PLP-5-2	5/16	1/8	11	0.91	1.38	0.49
W371PLP-5-4	5/16	1/4	14	0.91	1.34	0.45
W371PLP-5-6	5/16	3/8	18	0.91	1.36	0.47
W371PLP-6-2	3/8	1/8	15	1.04	1.63	0.60
W371PLP-6-4	3/8	1/4	15	1.04	1.63	0.60
W371PLP-6-6	3/8	3/8	18	1.04	1.60	0.55
W371PLP-6-8	3/8	1/2	22	1.04	1.63	0.59
W371PLP-8-4	1/2	1/4	20	1.38	2.17	0.79
W371PLP-8-6	1/2	3/8	20	1.38	2.17	0.79
W371PLP-8-8	1/2	1/2	24	1.38	2.07	0.79

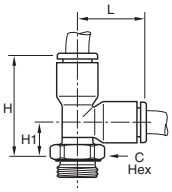

371PLP Male Run Tee - BSPP

Part No.	Tube Size (mm)	BSPP / M5	C Hex (mm)	H	H1	L
371PLP-4M-M5	4	M5X0.8	8	26.0	11.5	14.5
371PLP-4M-2G	4	1/8	13	23.0	8.5	14.5
371PLP-4M-4G	4	1/4	16	23.0	8.5	14.5
371PLP-6M-M5	6	M5X0.8	8	29.5	12.5	17.5
371PLP-6M-2G	6	1/8	13	27.0	10.0	17.5
371PLP-6M-4G	6	1/4	16	27.0	10.0	17.5
371PLP-8M-2G	8	1/8	13	36.5	14.0	23.0
371PLP-8M-4G	8	1/4	16	34.5	12.0	23.0
371PLP-8M-6G	8	3/8	20	34.5	12.0	23.0
371PLP-10M-4G	10	1/4	16	42.0	15.5	26.5
371PLP-10M-6G	10	3/8	20	40.5	14.0	26.5
371PLP-10M-8G	10	1/2	24	40.5	14.0	26.5
371PLP-12M-4G	12	1/4	16	48.0	17.0	31.0
371PLP-12M-6G	12	3/8	20	46.5	15.5	31.0
371PLP-12M-8G	12	1/2	24	46.5	15.5	31.0
371PLP-14M-6G	14	3/8	20	56.5	21.5	35.5
371PLP-14M-8G	14	1/2	24	51.0	16.0	35.5

Parker Hannifin Corporation
Pneumatic Division
Richland, Michigan
www.parker.com/pneumatics

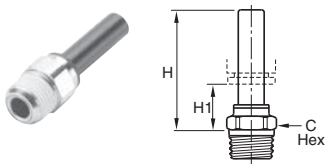

W68PLPSP Male Standpipe

Part No.	Tube Size (In.)	Thread NPT / UNF	C Hex (mm)	H	H1
68PLPSP-5/32-0	5/32	10-32	8	1.24	
W68PLPSP-5/32-2	5/32	1/8	11	1.02	0.57
W68PLPSP-5/32-4	5/32	1/4	14	1.04	0.59
W68PLPSP-4-2	1/4	1/8	11	1.18	0.61
W68PLPSP-4-4	1/4	1/4	14	1.12	0.57
W68PLPSP-5-2	5/16	1/8	11	1.16	0.43
W68PLPSP-5-4	5/16	1/4	14	1.12	0.39
W68PLPSP-6-2	3/8	1/8	15	1.75	0.65
W68PLPSP-6-4	3/8	1/4	15	1.42	0.67
W68PLPSP-6-6	3/8	3/8	17	1.42	0.61
W68PLPSP-8-6	1/2	3/8	17	1.44	0.37
W68PLPSP-8-8	1/2	1/2	21	1.46	0.39

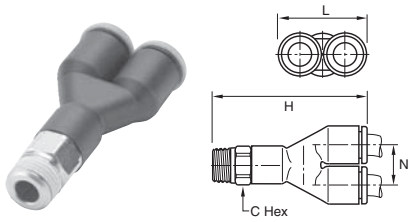

W368PLP Male Y Connector

Part No.	Tube Size (In.)	Thread NPT	C Hex (mm)	H	L	N
W368PLP-5/32-2	5/32	1/8	11	1.28	0.69	0.35
W368PLP-5/32-4	5/32	1/4	14	1.30	0.69	0.35
W368PLP-4-2	1/4	1/8	11	1.61	0.87	0.45
W368PLP-4-4	1/4	1/4	14	1.56	0.87	0.45
W368PLP-6-4	3/8	1/4	17	2.24	1.30	0.67
W368PLP-6-6	3/8	3/8	18	2.28	1.30	0.67

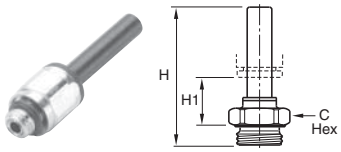

68PLPSP Male Standpipe - BSPP

Part No.	Tube Size (mm)	BSPT	C Hex (mm)	H	H1
68PLPSP-4M-M5	4	M5X0.8	8	31.0	16.0
68PLPSP-4M-2G	4	1/8	13	30.0	13.5
68PLPSP-4M-4G	4	1/4	16	31.0	13.5
68PLPSP-6M-2G	6	1/8	13	32.0	13.5
68PLPSP-6M-4G	6	1/4	16	33.0	13.5
68PLPSP-8M-2G	8	1/8	13	35.5	12.5
68PLPSP-8M-4G	8	1/4	16	34.5	10.5
68PLPSP-8M-6G	8	3/8	20	34.5	10.5
68PLPSP-10M-4G	10	1/4	16	43.5	17.5
68PLPSP-10M-6G	10	3/8	20	41.5	15.5
68PLPSP-10M-8G	10	1/2	24	41.5	15.5
68PLPSP-12M-6G	12	3/8	20	42.0	12.0
68PLPSP-12M-8G	12	1/2	24	43.5	12.0
68PLPSP-14M-6G	14	3/8	20	46.5	14.0
68PLPSP-14M-8G	14	1/2	24	48.0	13.5

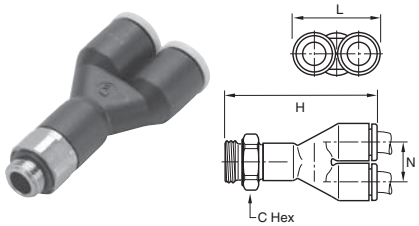

368PLP Male Y Connector - BSPP

Part No.	Tube Size (mm)	BSPP / M5	C Hex (mm)	H	L	N
368PLP-4M-M5	4	M5X0.8	8	32.5	17.5	9.0
368PLP-4M-2G	4	1/8	13	32.0	17.5	9.0
368PLP-4M-4G	4	1/4	16	32.0	17.5	9.0
368PLP-6M-M5	6	M5X0.8	10	39.5	21.5	11.0
368PLP-6M-2G	6	1/8	13	39.0	21.5	11.0
368PLP-6M-4G	6	1/4	16	39.0	21.5	11.0
368PLP-8M-2G	8	1/8	13	56.0	28.0	14.5
368PLP-8M-4G	8	1/4	16	55.0	28.0	14.5
368PLP-8M-6G	8	3/8	19	54.0	28.0	14.5
368PLP-10M-4G	10	1/4	16	63.5	33.0	17.0
368PLP-10M-6G	10	3/8	20	63.5	33.0	17.0
368PLP-10M-8G	10	1/2	20	65.0	33.0	17.0
368PLP-12M-6G	12	3/8	19	68.0	39.0	20.0
368PLP-12M-8G	12	1/2	24	70.0	39.0	20.0

Parker Hannifin Corporation
Pneumatic Division
Richland, Michigan
www.parker.com/pneumatics

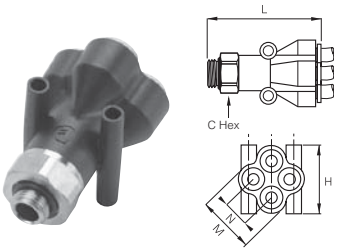

368PLPD Double Y Male Connector - BSPP

Part No.	Tube Size (mm)	BSPP	C Hex (mm)	H	L	M	N	Mounting Hole Dia.
368PLPD-4M-2G	4	1/8	13	25.5	41.0	21.0	10.0	3.7
368PLPD-4M-4G	4	1/4	16	25.5	40.0	21.0	10.0	3.7
368PLPD-6M-2G	6	1/8	19	31.5	52.5	26.5	12.0	3.7
368PLPD-6M-4G	6	1/4	19	31.5	53.5	26.5	12.0	3.7

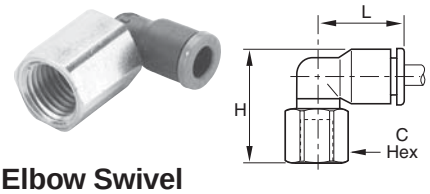

370PLP Female Elbow Swivel

Part No.	Tube Size (In.)	Thread NPT	C Hex (mm)	L	H
370PLP-2-2	1/8	1/8	13	0.57	0.91
370PLP-5/32-2	5/32	1/8	13	0.55	0.91
370PLP-5/32-4	5/32	1/4	16	0.55	1.08
370PLP-4-2	1/4	1/8	13	0.71	1.02
370PLP-4-4	1/4	1/4	16	0.71	1.18
370PLP-5-2	5/16	1/8	13	0.91	1.12
370PLP-5-4	5/16	1/4	16	0.91	1.28
370PLP-6-4	3/8	1/4	16	1.04	1.52
370PLP-8-6	1/2	3/8	22	1.38	1.88

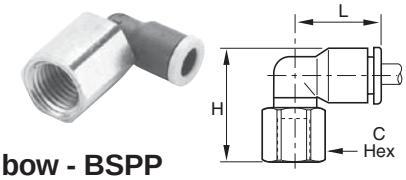

370PLP Female Elbow - BSPP

Part No.	Tube Size (mm)	BSPP	C Hex (mm)	H	L
370PLP-4M-2G	4	1/8	13	23.0	14.0
370PLP-4M-4G	4	1/4	16	27.0	14.0
370PLP-6M-2G	6	1/8	13	25.0	16.0
370PLP-6M-4G	6	1/4	16	29.0	16.0
370PLP-8M-2G	8	1/8	13	28.0	23.0
370PLP-8M-4G	8	1/4	16	32.0	23.0
370PLP-8M-6G	8	3/8	19	33.0	23.0
370PLP-10M-4G	10	1/4	16	34.5	26.5
370PLP-10M-6G	10	3/8	19	35.0	26.5
370PLP-10M-8G	10	1/2	24	41.0	26.5
370PLP-12M-4G	12	1/4	16	38.0	30.5
370PLP-12M-6G	12	3/8	19	38.5	30.5
370PLP-12M-8G	12	1/2	24	43.5	30.5

Parker Hannifin Corporation
Pneumatic Division
Richland, Michigan
www.parker.com/pneumatics

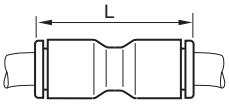

32PLP Equal Union

Part No.	Tube Size In.)	L
32PLP-2	1/8	0.97
32PLP-5/32	5/32	0.98
32PLP-3	3/16	1.44
32PLP-4	1/4	1.16
32PLP-5	5/16	1.50
32PLP-6	3/8	1.65
32PLP-8	1/2	2.17

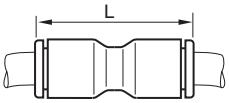

32PLP Unequal Union

Part No.	1 Tube Size (In.)	2 Tube Size (In.)	L
32PLP-5/32-2	5/32	1/8	0.96
32PLP-5/32-4	5/32	1/4	1.16
32PLP-4-2	1/4	1/8	1.32
32PLP-5-4	5/16	1/4	1.44
32PLP-6-4	3/8	1/4	1.61
32PLP-6-8	3/8	1/2	2.17

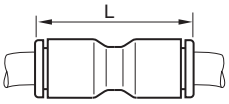

32PLP Union

Part No.	Tube Size (mm)	L
32PLP-3M	3	25.0
32PLP-4M	4	25.0
32PLP-6M	6	28.5
32PLP-8M	8	38.0
32PLP-10M	10	42.0
32PLP-12M	12	50.5
32PLP-14M	14	56.0

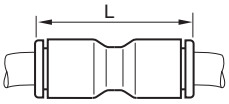

32PLP Unequal Union

Part No.	1 Tube Size (mm)	2 Tube Size (mm)	L
32PLP-3M-4M	3	4	25.0
32PLP-6M-4M	6	4	28.0
32PLP-8M-4M	8	4	28.0
32PLP-8M-6M	8	6	38.0
32PLP-10M-6M	10	6	42.0
32PLP-10M-8M	10	8	42.0
32PLP-12M-10M	12	10	50.5
32PLP-12M-14M	12	14	56.0
32PLP-12M-8M	12	8	50.5

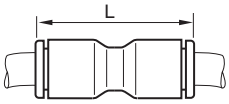

32PLP Converter

PartNo.	Tube Size (In.)	Tube Size (mm)	l
32PLP-6M-4	1/4	6	1.18
32PLP-10M-6	3/8	10	1.99
32PLP-12M-8	1/2	12	2.25

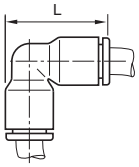

365PLP Union Elbow

Part No.	Tube Size (In.)	L
365PLP-2	1/8	0.71
365PLP-5/32	5/32	0.75
365PLP-3	3/16	1.07
365PLP-4	1/4	0.93
365PLP-5	5/16	1.16
365PLP-6	3/8	1.33
365PLP-8	1/2	1.38

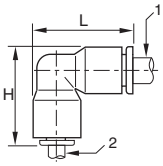

365PLP Unequal Union

Part No.	1 Tube Size (In.)	2 Tube Size (In.)	L	H
365PLP-2-4	1/8	1/4	0.93	0.93
365PLP-5/32-4	5/32	1/4	0.93	0.93
365PLP-6-4	3/8	1/4	1.33	1.30
365PLP-6-8	3/8	1/2	1.81	1.81

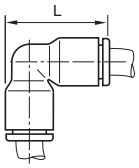

365PLP Union Elbow

Part No.	Tube Size (mm)	L
365PLP-4M	4	19.0
365PLP-6M	6	22.5
365PLP-8M	8	29.5
365PLP-10M	10	34.5
365PLP-12M	12	40.5
365PLP-14M	14	46.5

Parker Hannifin Corporation
Pneumatic Division
Richland, Michigan
www.parker.com/pneumatics

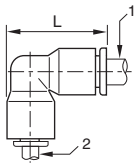

365PLP Unequal Union Elbow

Part No.	1 Tube Size (mm)	2 Tube Size (mm)	L
365PLP-4M-6M	4	6	22.5
365PLP-6M-8M	6	8	29.5
365PLP-8M-10M	8	10	34.5
365PLP-10M-12M	10	12	40.5

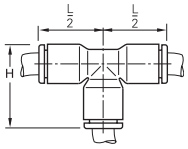

364PLP Union Tee

Part No.	Tube Size (In.)	L/2	H
364PLP-2	1/8	0.57	0.75
364PLP-5/32	5/32	0.57	0.75
364PLP-3	3/16	0.85	1.07
364PLP-4	1/4	0.93	0.89
364PLP-5	5/16	0.91	1.16
364PLP-6	3/8	1.02	1.34
364PLP-8	1/2	1.38	1.81

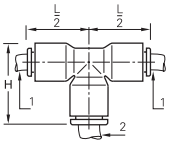

364PLP Unequal Union Tee

Part No.	1 Tube Size (In.)	2 Tube Size (In.)	L/2	H
364PLP-2-4	1/8	1/4	0.71	0.93
364PLP-5/32-4	5/32	1/4	0.71	0.93
364PLP-4-2	1/4	1/8	0.73	0.93
364PLP-4-5/32	1/4	5/32	0.73	0.93
364PLP-4-6	1/4	3/8	0.96	1.32
364PLP-6-4	3/8	1/4	1.00	1.28
364PLP-6-8	3/8	1/2	1.38	1.81
364PLP-8-4	1/2	1/4	1.38	1.81
364PLP-8-6	1/2	3/8	1.38	1.81

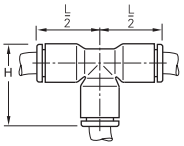

364PLP Union Tee

Part No.	Tube Size (mm)	H	L/2
364PLP-3M	3	19.0	14.5
364PLP-4M	4	19.0	14.5
364PLP-6M	6	23.5	18.0
364PLP-8M	8	29.5	23.0
364PLP-10M	10	34.5	26.5
364PLP-12M	12	40.5	31.0
364PLP-14M	14	46.0	35.5

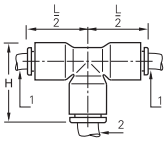

364PLP Unequal Union Tee

Part No.	1 Tube Size (mm)	2 Tube Size (mm)	H	L/2
364PLP-4M-6M	4	6	22.5	17.5
364PLP-6M-4M	6	4	22.5	17.5
364PLP-6M-8M	6	8	29.5	23.0
364PLP-8M-6M	8	6	29.5	23.0
364PLP-8M-10M	8	10	34.5	26.5
364PLP-10M-12M	10	12	34.5	26.5
364PLP-10M-8M	10	8	40.5	31.0
364PLP-12M-10M	12	10	40.5	31.0
364PLP-14M-8M	14	8	46.0	35.5

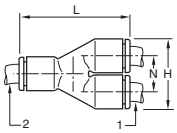

362PLP Union Y Connector

Part No.	1 Tube Size (In.)	2 Tube Size (In.)	L	H	N
362PLP-2	1/8	1/8	1.12	0.69	0.35
362PLP-2-4	1/8	1/4	1.42	0.87	0.45
362PLP-5/32	5/32	5/32	1.12	0.69	0.35
362PLP-5/32-4	5/32	1/4	1.42	0.87	0.45
362PLP-4	1/4	1/4	1.42	0.87	0.45
362PLP-4-6	1/4	3/8	1.31	1.30	0.67
362PLP-5	5/16	5/16	1.77	1.10	0.57
362PLP-6	3/8	3/8	2.09	1.30	0.67

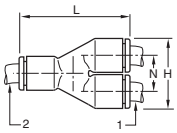

362PLP Union Y Connector

Part No.	1 Tube Size (mm)	2 Tube Size (m)	H	L	N
362PLP-4M	4	4	17.5	28.5	9.0
362PLP-6M	6	6	21.5	35.0	11.0
362PLP-8M	8	8	28.0	45.0	14.5
362PLP-10M	10	10	33.0	53.0	17.0
362PLP-12M	12	12	39.0	57.0	20.0
362PLP-4M-6M	4	6	17.5	33.0	9.0
362PLP-6M-8M	6	8	22.5	41.0	11.5
362PLP-8M-10M	8	10	28.0	47.0	14.5
362PLP-10M-12M	10	12	33.0	57.0	17.0

Parker Hannifin Corporation
Pneumatic Division
Richland, Michigan
www.parker.com/pneumatics

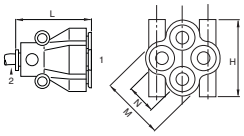

362PLPD Double Y Connector

Part No.	1 Tube Size (In.)	2 Tube Size (In.)	H	L	M	N	Mounting Hole Dia.
362PLPD-5/32	5/32	5/32	1.00	1.20	0.83	0.39	0.15
362PLPD-5/32-4	5/32	1/4	1.00	1.18	0.83	0.39	0.15

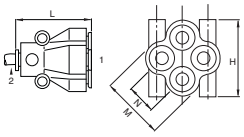

362PLPD Double Y Connector

Part No.	1 Tube Size (mm)	2 Tube Size (mm)	H	L	M	N	Mounting Hole Dia.
362PLPD-4M	4	4	25.5	30.5	21.0	10.0	3.7
362PLPD-6M	6	6	31.5	37.5	26.5	12.0	3.7
362PLPD-4M-6M	4	6	25.5	30.5	21.0	10.0	3.7
362PLPD-6M-8M	6	8	31.5	38.0	26.5	12.0	3.7

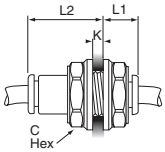

32PLPBH Bulkhead Union

Part No.	Tube Size (In.)	C Hex (mm)	K Max	L1	L2
32PLPBH-2	1/8	13	0.22	0.37	0.61
32PLPBH-5/32	5/32	13	0.22	0.59	0.39
32PLPBH-4	1/4	16	0.35	0.37	0.81
32PLPBH-5	5/16	18	0.57	0.98	0.53
32PLPBH-6	3/8	22	0.57	0.51	1.18
32PLPBH-8	1/2	29	0.81	0.67	1.61

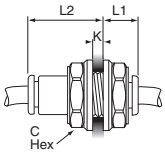

32PLPBH Bulkhead Union

Part No.	Tube Size (mm)	C Hex (mm)	K Max	L1	L2
32PLPBH-4M	4	13	5.5	15.0	10.0
32PLPBH-6M	6	15	8.5	18.0	10.5
32PLPBH-8M	8	18	14.5	25.0	13.5
32PLPBH-10M	10	22	14.5	27.5	15.5
32PLPBH-12M	12	26	18.5	33.0	18.0
32PLPBH-14M	14	29	20.5	37.5	20.5

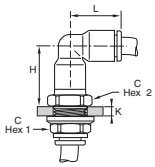

365PLPBH Equal Bulkhead Elbow

Part No.	Tube Size (In.)	C1 Hex	C2 Hex	K Max	H	L
365PLPBH-2	1/8	13	13	0.28	0.71	0.57
365PLPBH-5/32	5/32		13	0.26	0.83	0.67
365PLPBH-4	1/4	18	17	0.32	0.87	0.71
365PLPBH-5	5/16		18	0.31	1.22	0.94
365PLPBH-6	3/8	22	22	0.33	1.08	1.00
365PLPBH-8	1/2	29	27	0.41	1.54	1.38

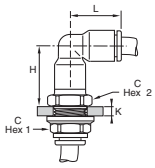

365PLPBH Equal Bulkhead Elbow

Part No.	Tube Size (mm)	C1 Hex	C2 Hex	K Max	H	L
365PLPBH-4M	4	13	13	6.5	21.0	17.0
365PLPBH-6M	6	15	15	7.0	24.5	19.5
365PLPBH-8M	8	18	18	8.0	31.0	24.0
365PLPBH-10M	10	22	22	8.5	36.0	28.0
365PLPBH-12M	12	26	26	8.5	42.0	33.0

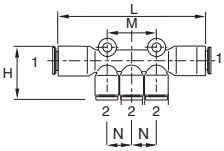

24PLP Multiple Tee

Part No.	1 Tube Size (In.)	2 Tube Size (In.)	H	L	M	N	Mounting Hole Dia.
24PLP-4-5/32	1/4	5/32	0.97	2.81	0.90	0.45	0.17
24PLP-4-4	1/4	1/4	1.22	3.14	1.21	0.61	0.17
24PLP-5-5/32	5/16	5/32	0.96	2.91		0.45	0.17
24PLP-6-4	3/8	1/4	1.34	3.21	1.22	0.61	0.17

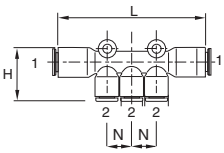

24PLP Multiple Tee

Part No.	1 Tube Size (mm)	2 Tube Size (mm)	H	L	N	Mounting Hole Dia.
24PLP-6M-4M	6	4	24.5	74	11.5	4.2
24PLP-8M-4M	8	4	24.5	74	11.5	4.2
24PLP-8M-6M	8	6	24.5	74	11.5	4.2
24PLP-10M-6M	10	6	36.0	81	14.5	4.2
24PLP-10M-8M	10	8	36.0	81	14.5	4.2

Parker Hannifin Corporation
Pneumatic Division
Richland, Michigan
www.parker.com/pneumatics

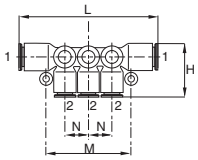

24PLPD Double Multiple Tee

Part No.	1 Tube Size (In.)	2 Tube Size (In.)	H	L	M	N	Mounting Hole Dia.
24PLPD-4-5/32	1/4	5/32	0.73	2.84	1.69	0.45	0.17
24PLPD-4-4	1/4	1/4	0.73	2.84	1.69	0.45	0.17
24PLPD-5-5/32	5/16	5/32	0.77	2.87	1.69	0.45	0.17
24PLPD-6-4	3/8	1/4	0.91	3.31	2.05	0.57	0.17

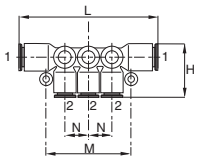

24PLPD Double Multiple Tee

Part No.	1 Tube Size (mm)	2 Tube Size (mm)	H	L	M	N	Mounting Hole Dia.
24PLPD-6M-4M	6	4	18.5	72.0	43.0	11.5	4.2
24PLPD-8M-4M	8	4	18.5	73.0	43.0	11.5	4.2
24PLPD-8M-6M	8	6	18.5	73.0	43.0	11.5	4.2
24PLPD-10M-6M	10	6	23.0	84.0	52.0	14.5	4.2
24PLPD-10M-8M	10	8	23.5	84.0	52.0	14.5	4.2

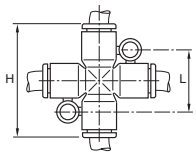

347PLP Equal Cross

Part No.	Tube Size (In.)	H	L	Mounting Hole Dia.
347PLP-5/32	5/32	1.42	0.79	0.17
347PLP-4	1/4	1.40	0.79	0.17
347PLP-5	5/16	1.81	0.89	0.17

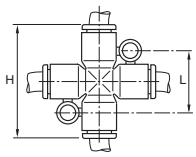

347PLP Equal Cross

Part No.	Tube Size (mm)	H	L	Mounting Hole Dia.
347PLP-4M	4	36	20.0	4.2
347PLP-6M	6	36	20.0	4.2
347PLP-8M	8	46	22.5	4.2

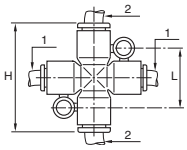

347PLP Unequal Cross

Part No.	1 Tube Size (mm)	2 Tube Size (mm)	H	L	Mounting Hole Dia.
347PLP-4M-6M	4	6	36	20.0	4.2
347PLP-6M-8M	6	8	46	22.5	4.2
347PLP-4M-6M	4	6	36	20.0	4.2
374PLP-6M-8M	6	8	46	22.5	4.2

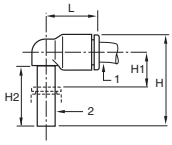

369PLPSP Plug-In Elbow

Part No.	1 Tube Size (In.)	2 Tube Size (In.)	H	H1	H2	L
369PLPSP-2	1/8	1/8	0.92	0.31	0.64	0.57
369PLPSP-5/32	5/32	5/32	0.91	0.24	0.61	0.55
369PLPSP-5/32-4	5/32	1/4	1.08	0.30	0.71	0.71
369PLPSP-4	1/4	1/4	1.20	0.43	0.83	0.73
369PLPSP-4-6	1/4	3/8	1.52	0.35	0.96	0.98
369PLPSP-5	5/16	5/16	1.32	0.32	0.85	0.91
369PLPSP-6	3/8	3/8	1.52	0.35	0.96	1.02
369PLPSP-8	1/2	1/2	2.00	0.51	1.12	1.38

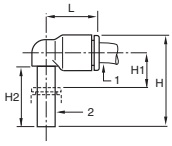

369PLPSP Plug-In Elbow

Part No.	1 Tube Size (mm)	2 Tube Size (mm)	H	H1	H2	L
369PLPSP-4M	4	4	23.0	6.0	15.5	14.0
369PLPSP-6M	6	6	26.5	7.0	17.0	16.0
369PLPSP-8M	8	8	33.5	8.0	21.5	23.0
369PLPSP-10M	10	10	39.0	9.5	24.5	23.5
369PLPSP-12M	12	12	44.5	10.0	27.5	31.0
369PLPSP-4M-6M	4	6	26.5	7.0	17.0	16.0
369PLPSP-6M-4M	6	4	24.5	7.0	15.5	16.0
369PLPSP-6M-8M	6	8	33.5	8.0	21.5	22.0
369PLPSP-8M-10M	8	10	39.0	8.5	24.5	26.5
369PLPSP-10M-12M	10	12	44.5	10.0	27.5	31.0

Parker Hannifin Corporation
Pneumatic Division
Richland, Michigan
www.parker.com/pneumatics

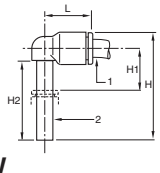

369PLPSPX Extended Plug-In Elbow

Part No.	1 Tube Size (In.)	2 Tube Size (In.)	H	H1	H2	L
369PLPSPX-2	1/8	1/8	1.26	0.65	0.98	0.57
369PLPSPX-5/32	5/32	5/32	1.28	0.61	0.98	0.55
369PLPSPX-4	1/4	1/4	1.56	0.77	1.18	0.71
369PLPSPX-5	5/16	5/16	1.93	0.93	1.46	0.91
369PLPSPX-6	3/8	3/8	2.19	1.02	1.63	1.02

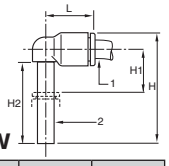

369PLPXSP Extended Plug-In Elbow

Part No.	1 Tube Size (mm)	2 Tube Size (mm)	H	H1	H2	L
369PLPXSP-4M	4	4	32.5	15.5	25.0	14.0
369PLPXSP-6M	6	6	38.5	19.0	29.0	16.0
369PLPXSP-8M	8	8	49.0	23.5	37.0	23.0
369PLPXSP-10M	10	10	56.0	26.5	41.5	26.5
369PLPXSP-12M	12	12	62.5	28.0	45.5	31.0
369PLPXSP-4M-6M	4	6	38.5	19.0	29.0	16.0
369PLPXSP-6M-8M	6	8	49.0	23.5	37.0	23.0
369PLPXSP-8M-10M	8	10	56.0	26.5	41.5	26.5
369PLPXSP-10M-12M	10	12	62.5	28.0	45.5	31.0

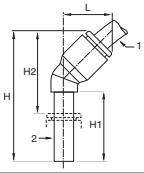

379PLPSP 45° Plug-In Elbow

Part No.	1 Tube Size (In.)	2 Tube Size (In.)	H	H1	H2	L
379PLPSP-2	1/8	1/8	1.14	0.59	0.69	0.47
379PLPSP-5/32	5/32	5/32	1.32	0.75	0.83	0.51
379PLPSP-4	1/4	1/4	1.44	0.71	0.87	0.57
379PLPSP-5	5/16	5/16	1.73	0.85	1.00	0.77
379PLPSP-6	3/8	3/8	2.00	0.96	1.16	0.91

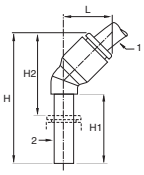

379PLPSP 45° Plug-In Elbow

Part No.	1 Tube Size (mm)	2 Tube Size (mm)	H	H1	H2	L
379PLPSP-4M	4	4	33.5	19.0	21.0	13.0
379PLPSP-6M	6	6	39.0	21.0	25.0	14.5
379PLPSP-8M	8	8	44.0	21.5	25.5	19.5
379PLPSP-10M	10	10	53.0	27.0	32.5	23.0
379PLPSP-12M	12	12	58.5	27.5	34.0	26.5

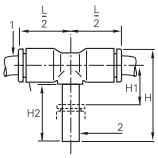

372PLPSP Plug-In Branch Tee

Part No.	1 Tube Size (In.)	2 Tube Size (In.)	H	H1	H2	L/2
372PLPSP-2	1/8	1/8	0.95	0.26	0.59	0.57
372PLPSP-5/32	5/32	5/32	0.91	0.24	0.61	0.57
372PLPSP-4	1/4	1/4	0.98	0.43	0.77	0.73
372PLPSP-5	5/16	5/16	1.32	0.32	0.85	0.91
372PLPSP-6	3/8	3/8	1.61	0.35	0.96	0.98
372PLPSP-8	1/2	1/2	2.01	0.51	1.12	1.38

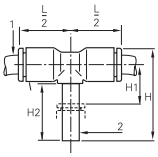

372PLPSP Plug-In Branch Tee

Part No.	1 Tube Size (mm)	2 Tube Size (mm)	H	H1	H2	L/2
372PLPSP-4M	4	4	23.0	6.0	15.5	14.5
372PLPSP-6M	6	6	26.5	7.0	17.0	16.0
372PLPSP-8M	8	8	33.5	8.0	21.5	23.0
372PLPSP-10M	10	10	39.0	9.5	24.5	26.5
372PLPSP-12M	12	12	44.5	10.0	27.5	31.0
372PLPSP-4M-6M	4	6	26.5	7.0	17.0	16.0
372PLPSP-6M-8M	6	8	33.5	8.0	21.5	23.0
372PLPSP-8M-10M	8	10	39.0	9.5	24.5	26.5
372PLPSP-10M-12M	10	12	44.5	10.0	27.5	31.0

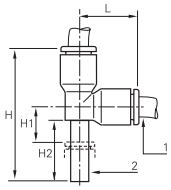

371PLPSP Plug-In Run Tee

Part No.	1 Tube Size (In.)	2 Tube Size (In.)	H	H1	H2	L
371PLPSP-5/32	5/32	5/32	1.30	0.24	0.61	0.57
371PLPSP-4	1/4	1/4	1.69	0.43	0.83	0.73
371PLPSP-5	5/16	5/16	1.93	0.32	0.85	0.91
371PLPSP-6	3/8	3/8	2.23	0.33	0.96	1.00
371PLPSP-8	1/2	1/2	2.86	0.51	1.12	1.38

Parker Hannifin Corporation
Pneumatic Division
Richland, Michigan
www.parker.com/pneumatics

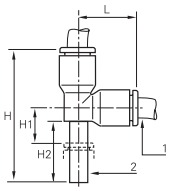

371PLPSP Plug-In Run Tee

Part No.	1 Tube Size (mm)	2 Tube Size (mm)	H	H1	H2	L
371PLPSP-4M	4	4	33.0	6.0	15.5	14.5
371PLPSP-6M	6	6	38.5	7.0	17.0	17.5
371PLPSP-8M	8	8	49.0	8.0	21.5	23.0
371PLPSP-10M	10	10	57.0	10.5	24.5	26.5
371PLPSP-12M	12	12	65.5	10.5	27.5	31.0
371PLPSP-4M-6M	4	6	10.5	7.0	17.0	17.5
371PLPSP-6M-8M	6	8	13.5	8.0	21.5	23.0
371PLPSP-8M-10M	8	10	16.0	10.5	24.5	26.5
371PLPSP-10M-12M	10	12	19.0	10.5	27.5	31.0

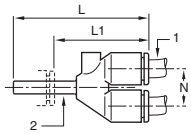

362PLPSP Plug-In Y

Part No.	1 Tube Size (In.)	2 Tube Size (In.)	L	L1	N
362PLPSP-2	1/8	1/8	1.36	1.00	0.35
362PLPSP-5/32	5/32	5/32	1.34	0.85	0.35
362PLPSP-4	1/4	1/4	1.60	1.02	0.45
362PLPSP-5	5/16	5/16	2.00	1.26	0.57
362PLPSP-6	3/8	3/8	2.23	1.42	0.67

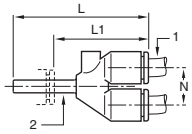

362PLPSP Plug-In Y

Part No.	1 Tube Size (mm)	2 Tube Size (mm)	L	L1	N
362PLPSP-4M	4	4	34.0	21.5	9.0
362PLPSP-6M	6	6	39.5	25.5	11.0
362PLPSP-8M	8	8	50.5	32.0	14.5
362PLPSP-10M	10	10	57.5	36.0	17.0
362PLPSP-12M	12	12	66.0	41.0	20.0
362PLPSP-4M-6M	4	6	35.5	21.5	9.0
362PLPSP-6M-8M	6	8	44.0	25.5	11.0
362PLPSP-8M-10M	8	10	53.5	32.0	14.5
362PLPSP-10M-12M	10	12	60.0	35.0	17.0

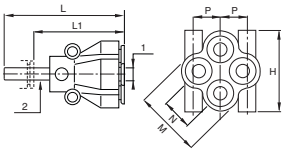

362PLPDSP Plug-In Multiple Y

Part No.	1 Tube Size (mm)	2 Tube Size (mm)	H	L	L1	M	N
362PLPDSP-6M-4M	6	4	25.5	45.0	31.0	21.0	10.0
362PLPDSP-8M-4M	8	4	25.5	49.5	31.0	21.0	10.0
362PLPDSP-8M-6M	8	6	31.5	59.5	41.0	26.5	12.0

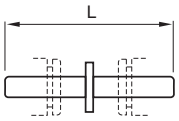

63PLP Double Male Union

Part No.	Tube Size (In.)	L
63PLP-5/32	5/32	1.36
63PLP-4	1/4	1.52
63PLP-5	5/16	1.61
63PLP-6	3/8	2.03
63PLP-8	1/2	2.13

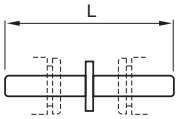

63PLP Double Male Union

Part No.	Tube Size (mm)	L
63PLP4M	4	34 1/2
63PLP6M	6	38 1/2
63PLP8M	8	41
63PLP10M	10	51 1/2
63PLP12M	12	60
63PLP14M	14	69 1/2

Parker Hannifin Corporation
Pneumatic Division
Richland, Michigan
www.parker.com/pneumatics

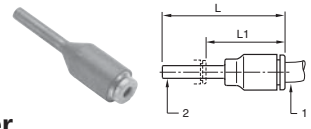

67PLP Tube End Reducer

Part No.	1 Tube Size (In.)	2 Tube Size (In.)	L	L1
67PLP-2-5/32	1/8	5/32	1.79	1.32
67PLP-2-3	1/8	3/16	1.79	1.14
67PLP-2-4	1/8	1/4	1.79	1.22
67PLP-5/32-3	5/32	3/16	1.48	.83
67PLP-5/32-4	5/32	1/4	1.48	.91
67PLP-5/32-5	5/32	5/16	1.48	.75
67PLP-5/32-6	5/32	3/8	1.61	.81
67PLP-3-5	3/16	5/16	1.79	1.06
67PLP-3-4	3/16	1/4	1.79	1.22
67PLP-4-5	1/4	5/16	1.61	.89
67PLP-4-6	1/4	3/8	1.61	.81
67PLP-4-8	1/4	1/2	1.97	.98
67PLP-5-6	5/16	3/8	1.93	1.12
67PLP-5-8	5/16	1/2	2.01	1.02
67PLP-6-8	3/8	1/2	2.01	1.04

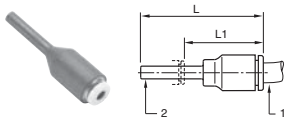

67PLP Tube Reducer

Part No.	1 Tube Size (mm)	2 Tube Size (mm)	L	L1
67PLP-6M-4M	6	4	37.5	23.5
67PLP-8M-4M	8	4	37.5	19.0
67PLP-8M-6M	8	6	36.0	20.5
67PLP-10M-4M	10	4	44.0	22.5
67PLP-10M-6M	10	6	38.0	17.5
67PLP-10M-8M	10	8	49.0	28.5
67PLP-12M-10M	12	10	56.5	33.5
67PLP-12M-6M	12	6	46.0	23.0
67PLP-12M-8M	12	8	49.0	24.5
67PLP-14M-10M	14	10	58.5	33.5
67PLP-14M-12M	14	12	58.5	33.5
67PLP-14M-6M	14	6	48.0	23.0
67PLP-14M-8M	14	8	48.0	23.0

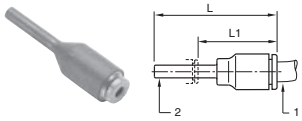

32PLPSP Tube Expander

Part No.	1 Tube Size (In.)	2 Tube Size (In.)	L	L1
32PLPSP-4-2	1/4	1/8	1.61	1.16
32PLPSP-4-6M	1/4	6M	1.75	1.02
32PLPSP-4-5/32	1/4	5/32	1.61	1.14
32PLPSP-4-3	1/4	3/16	1.61	1.00
32PLPSP-6-4	3/8	1/4	1.58	1.00

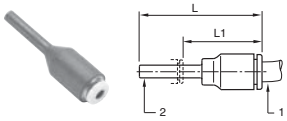

32PLPSP Tube Expander

Part No.	Tube Size (mm)	Tube Size (mm)	L	L1
32PLPSP-6M-4M	6	4	35.0	23.0
32PLPSP-8M-6M	8	6	45.0	31.5
32PLPSP-10M-8M	10	8	42.5	21.0
32PLPSP-12M-10M	12	10	49.0	24.5

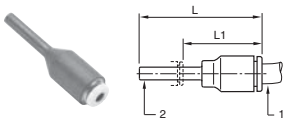

32PLPSP Tube Converter

Part No.	1 Tube Size (mm)	2 Tube Size (In.)	L	L1
32PLPSP-4M-2	4M	1/8	1.61	1.16
32PLPSP-8M-4	8M	1/4	1.58	1.00

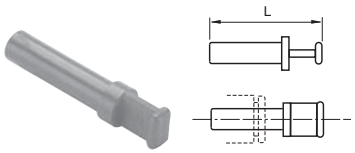

639PLP Plug

Part No.	Tube Size (In.)	L
639PLP-2	1/8	1.30
639PLP-5/32	5/32	1.18
639PLP-3	3/16	1.36
639PLP-4	1/4	1.44
639PLP-5	5/16	1.38
639PLP-6	3/8	1.67
639PLP-8	1/2	1.91

Parker Hannifin Corporation
Pneumatic Division
Richland, Michigan
www.parker.com/pneumatics

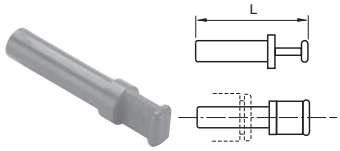

639PLP Plug

Part No.	Tube Size (mm)	L
639PLP-3M	3	25
639PLP-4M	4	30
639PLP-6M	6	33
639PLP-8M	8	33
639PLP-10M	10	42
639PLP-12M	12	45
639PLP-14M	14	49

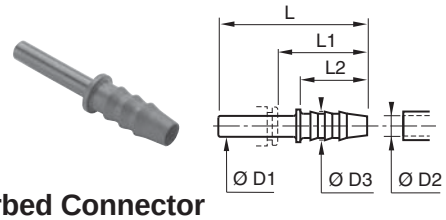

322PLPSP Barbed Connector

Part No.	OD 1	OD 2	OD 3	L	L1	L2
322PLPSP-2-5/32	5/32	0.12	0.20	1.46	0.98	0.67
322PLPSP-5M-5/32	5/32	0.20	0.28	1.46	0.98	0.67
322PLPSP-3-4	1/4	3/16		1.65	1.00	
322PLPSP-4-5	5/16	0.25	0.34	1.55	0.83	0.67
322PLPSP-5-5	3/8	0.32	0.39	1.75	1.02	0.87
322PLPSP-5-6	3/8	0.32	0.39	1.97	1.16	0.87

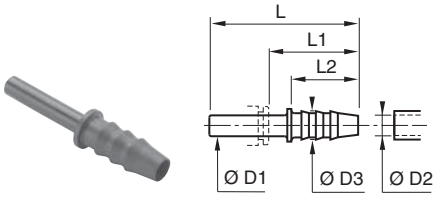

322PLPSP Barbed Connector

Part No.	OD 1	OD 2	OD 3	L	L1	L2
322PLPSP-3M-4M	4	3.2	5.0	37.0	25.0	17.0
322PLPSP-5M-4M	4	5.0	7.0	37.0	25.0	17.0
322PLPSP-5M-6M	6	5.0	7.0	39.0	25.0	17.0
322PLPSP-6M-8M	8	6.3	8.5	39.5	21.0	17.0
322PLPSP-8M-8M	8	8.0	10.0	44.5	26.0	22.0
322PLPSP-6M-10M	10	6.3	8.0	45.0	24.5	17.0
322PLPSP-8M-10M	10	8.0	10.0	50.0	29.5	22.0
322PLPSP-8M-12M	12	8.0	10.0	50.0	26.0	22.0
322PLPSP-1012M	12	10.0	12.0	48.5	25.5	22.5
322PLPSP-1212M	12	12.5	14.5	57.0	34.0	22.5
322PLPSP-1214M	14	12.5	14.5	59.5	34.5	22.5
322PLPSP-1414M	14	14.0	16.0	59.5	34.5	22.5

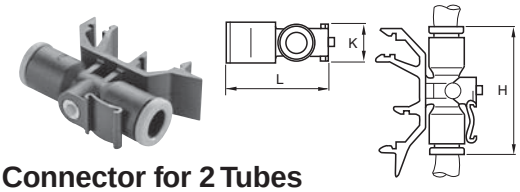

32PLPRC Connector for 2 Tubes

Part No.	Tube Size (In.)	H	K	L
32PLPRC-5/32	5/32	1.44	0.47	1.18
32PLPRC-4	1/4	1.44	0.47	1.18
32PLPRC-5	5/16	1.81	0.51	1.28

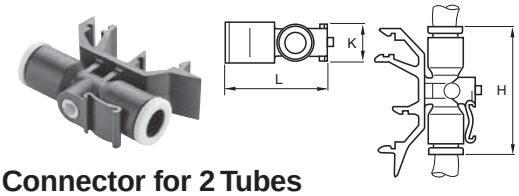

32PLPRC Connector for 2 Tubes

Part No.	Tube Size (mm)	H	K	L
32PLPRC-4M	4	36.5	11.0	39.5
32PLPRC-6M	6	36.5	11.0	39.5
32PLPRC-8M	8	46.0	13.0	44.5

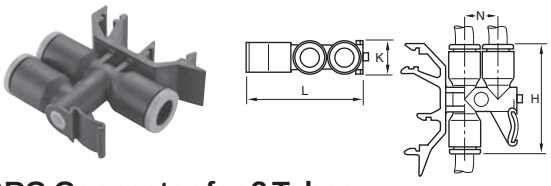

32PLPDRC Connector for 3 Tubes

Part No.	Tube Size (In.)	H	K	L	N
32PLPDRC-5/32	5/32	1.44	0.43	1.56	0.45
32PLPDRC-5	5/16	1.81	0.51	1.75	0.57

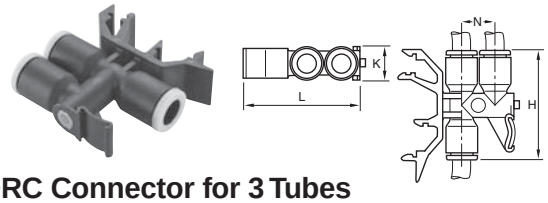

32PLPDRC Connector for 3 Tubes

Part No.	Tube Size (mm)	H	K	L	N
32PLPDRC-4M	4	36.5	11.0	39.5	
32PLPDRC-6M	6	36.5	11.0	39.5	
32PLPDRC-8M	8	46.0	13.0	14.5	

Parker Hannifin Corporation
Pneumatic Division
Richland, Michigan
www.parker.com/pneumatics

Notes

Parker Hannifin Corporation
Pneumatic Division
Richland, Michigan
www.parker.com/pneumatics

Tube to Male NPTF	**W68PLP** Male Connector Page N30	**W68PLPR** Male Connector Round Body Page N31	**W68PW** Male Connector Page N36	**W169PLP** Male Elbow Swivel Page N33	**W169PLPNS** Male Elbow Page N33
W169PW Male Elbow Swivel Page N37	**W171PLP** Male run Tee Swivel Page N34	**W171PW** Male run Tee Swivel Page N37	**W172PLP** Male Branch Tee Swivel Page N35	**W172PW** Male Branch Tee Swivel Page N37	
Tube to Tube	**62PLP** Union Page N29	**62PW** Union Page N29	**164PLP** Union Tee Page N32	**164PW** Union Tee Page N37	**165PLP** Union Elbow Page N32
165PW Union Elbow Page N37	**Tube to Female NPTF**	**66PLP** Female Connector Page N30	**66PW** Female Connector Page N36		
Bulkhead Unions	**62PLPBH** Union Bulkhead Page N29	**66PLPBH** Female Bulkhead Page N29	**62PWBH** Union Bulkhead Page N36	**66PWBH** Female Bulkhead Page N36	
Tube to Male BSPP	**PLHBF4-B** Male Connector Page N31	**Auxiliary Components**	**DB** Dust/Weld Spatter Boot Page N36		
Metric Tube to Male NPTF	**FPB** Male Connector Page N31	**C6PB** Male Elbow Page N33	**Metric Tube to Metric Tube**	**HPB** Union Page N37	**JPB** Union Tee Page N32
EPB Union Elbow Page N32	**Metric Bulkhead Unions**	**WBMPB** Union Bulkhead Page N29	**WPB** Union Bulkhead Page N29	**WE6PB** Union Elbow Bulkhead Page N32	

Parker Hannifin Corporation
Pneumatic Division
Richland, Michigan
www.parker.com/pneumatics

Metric Tube to Female BSPP	**G4PB** Female Connector Page N30	**WG4PB** Union Female Bulkhead Page N30	**Metric Tube to Male BSPP**	**C64PB** Male Elbow Swivel Page N33	**C64SPB** Male Elbow Swivel Page N34
F4PB Male Connector Page N31	**R64PB** Male Run Tee Swivel Page N34	**S64PB** Male Branch Tee Swivel Page N35	**Metric Tube to Metric Straight Thread**	**C68PB** Male Elbow Swivel Page N34	**C68SPB** Male Elbow Swivel Page N34
F28PB Male Connector Page N31	**F8PB** Male Connector Page N31	**R68PB** Male Run Tee Swivel Page N34	**S68PB** Male Branch Tee Swivel Page N35		
Metric Auxiliary Components	**TRPB** Tube End Reducer Page N35	**FNPB** Plug Page N36	**TEPB** Tube End Expander Page N35		

Parker Hannifin Corporation
Pneumatic Division
Richland, Michigan
www.parker.com/pneumatics

Materials of Construction	
Nickel Plated Bodies:	Nickel plated brass
O-ring:	Nitrile (other compounds available on request)
Release Button:	Polyacetal
Grab Ring:	Stainless Steel
Note:	For brass body Prestolok replace PLP with PLN

Nomenclature	
Example: W68PLP-4-2	**Attribute:**
W	White Arcylic Thread Sealant
68	Male Connector
PlP	Prestolok
4	1/4" (4/16) Tube O.D.
2	1/8" (2/16) Pipe Thread

Specifications	
Pressure Range:	Up to 300 PSI depending on tubing
Temperature Range:	0° to +200°F
Note:	Vacuum applications are dependent upon temperature and type of tubing used.

Tubing sizes	
Tube O.D.:	1/8, 3/16, 5/32, 1/4, 5/16, 3/8, 1/2
Tube O.D. (mm):	4,6,8,10,12,14

Recommended Tubing
Prestolok nickel plated and composite fittings are designed to be used with the following Parker Hannifin Parflex Division tubing.

Tubing Series	Tubing Material
E	Linear Low Density Polyethylene
PP	Polypropylene
N	Plasticized Polyamide (Nylon)
NR	Unplasticized Polyamide (Rigid Nylon)
U	Polyurethane 90 Durometer Shore A
HU	Polyurethane 95 Durometer Shore A

Other materials for Prestolok inch sized nickel plated fittings: Polyurethane 85 Durometer Shore A

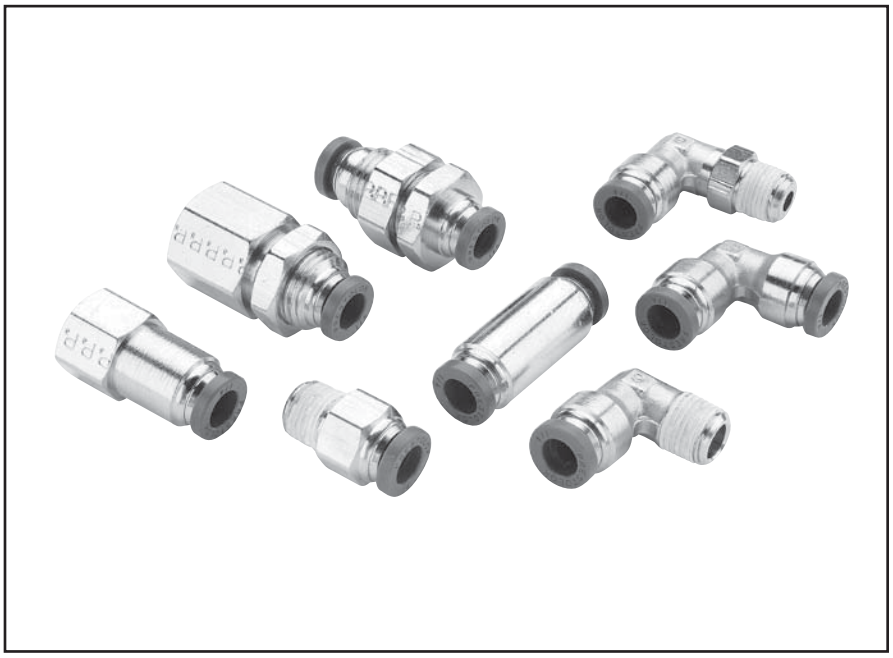

A compact one-piece push-to-connect fitting. Designed for low pressure circuits where assembly, disassembly and reassembly is important. Stainless steel grab ring grips the tubing to provide retention. Swivels are featured on all male pipe threaded shapes for installation in tight places and for precise positioning. Prestolok should not be used for live swivel applications. Prestolok fittings come with a pre-applied white acrylic sealant.

CAUTION: All current manufacturers of 85A PU tubing do not approve the use of push-to-connect fittings with their product.

Testing has shown acceptable use with certain O.D – I.D. combinations. Applications and service conditions vary and therefore the use of a tube support may be required for any 85A PU tubing.

The following commercially available O.D. – I.D. 85A tubing sizes require the use of a tube support regardless of application.

5/32” – 3/32”	3/16” – 1/8”	1/4” - .170”	1/4” – 3/16”
5/16” – 1/4”	3/8” – 5/16”	1/2” – 3/8”	

Assembly Instructions

1. Cut thermoplastic tubing squarely, using Parker Tube Cutter PTC-001. Be certain the port or mating part is clean and free of debris.
2. Insert tubing into fitting until it bottoms. A slight twisting motion will ease the insertion. Pull on tubing to verify it is properly retained in the fitting.
3. To disassemble, simply push the release button against the body and remove tubing.
4. It is recommended to trim the tubing after every disassembly to insure a proper seal.

Parker Hannifin Corporation
Pneumatic Division
Richland, Michigan
www.parker.com/pneumatics

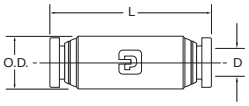

62PLP Union

Part No.	Tube Size (In.)	O.D.	L	Flow Dia. D
62PLP-2	1/8	.375	1.40	.094
62PLP-3	3/16	.437	1.41	.156
62PLP-5/32	5/32	.375	1.41	.125
62PLP-4	1/4	.500	1.43	.188
62PLP-5	5/16	.562	1.65	.250
62PLP-6	3/8	.625	1.66	.312
62PLP-8	1/2	.750	1.82	.375

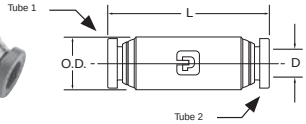

62PLP Unequal Union

Part No.	Tube 1 Size (In.)	Tube 2 Size (In.)	O.D.	L	Flow Dia. D
62PLP-5/32-2	5/32	1/8	.375	1.41	.094
62PLP-4-2	1/4	1/8	.500	1.43	.094
62PLP-4-5/32	1/4	5/32	.500	1.43	.125
62PLP-4-6	1/4	3/8	.625	1.66	.188
62PLP-6-8	3/8	1/2	.750	1.82	.312

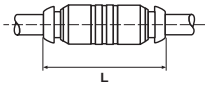

HPB Equal Union

Part No.	Tube Size (mm)	L
HPB4	4	33.0
HPB5	5	34.5
HPB6	6	36.0
HPB8	8	38.0
HPB10	10	48.0
HPB12	12	48.0
HPB14	14	54.0

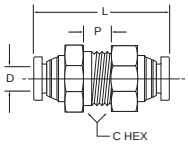

62PLPBH Bulkhead Union

Part No.	Tube Size (In.)	Bulkhead Hole Dia. B	C Hex	p Max.	I	D
62PLPBH-2	1/8	7/16	9/16	.39	1.40	.094
62PLPBH-5/32	5/32	7/16	9/16	.39	1.41	.125
62PLPBH-4	1/4	9/16	11/16	.29	1.43	.188
62PLPBH-5	5/16	5/8	3/4	.60	1.65	.250
62PLPBH-6	3/8	3/4	7/8	.54	1.66	.312
62PLPBH-8	1/2	7/8	1	.66	2.04	.375

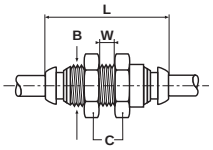

WPB Bulkhead Union

Part No.	Tube Size (mm)	B-mm Thread	C Hex	L	W	Bulkhead Hole Dia.
WPB4	4	M11x0.75	16	33	6	11mm
WPB6	6	M13x1	19	35	6	13mm
WPB8	8	M15x1.25	22	36	6	16mm
WPB10	10	M18x1	22	43	8	18mm
WPB12	12	M23x1.5	27	46	10	23mm
WPB14	14	M24x1.5	30	52	10	24mm

Jam nut is supplied loose in box

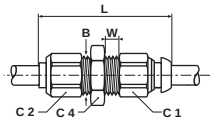

WBMPB Mixed Bulkhead Union

Part No.	Tube 1 Size (mm)	Tube 2 Size (mm)	B-mm Thread	C1	C2	C4	L	W	Bulkhead Hole Dia.
WBMPB4	4	4	M8x1	10	10	12	34	5	8mm
WBMPB6	6	6	M10x1	12	10	12	37	5	10mm
WBMPB8	8	8	M12x1	14	14	16	39	5	12mm
WBMPB10	10	10	M14x1	17	17	19	45	5	14mm
WBMPB12	12	12	M16x1	22	19	22	49	5	16mm
WBMPB14	14	14	M18x1	24	22	22	52	7	18mm

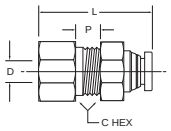

66PLPBH Female Bulkhead

Part No.	Tube Size (In.)	Pipe Thd (NPTF)	C Hex	P Max.	L	Flow Dia. D	Bkhd Hole Dia.
66PLPBH-5/32-4	5/32	1/4	11/16	.19	1.39	.125	1/2
66PLPBH-4-4	1/4	1/4	11/16	.24	1.35	.188	9/16
66PLPBH-6-6	3/8	3/8	1	.22	1.47	.312	7/8
66PLPBH-8-6	1/2	3/8	1 1/4	.35	1.56	.344	1

Parker Hannifin Corporation
Pneumatic Division
Richland, Michigan
www.parker.com/pneumatics

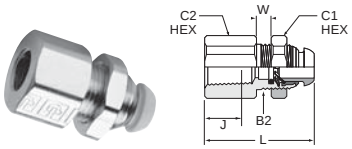

WG4PB Bulkhead Union Female BSPP

Part No.	Tube Size (mm)	BSPP	B2	C1 Hex	C2 Hex	J	L	W
WG4PB4-1/8	4	G1/8	M11x0.75	14	14	8	25.0	6
WG4PB6-1/8	6	G1/8	M13x1	17	17	8	25.0	6
WG4PB6-1/4	6	G1/4	M13x1	17	19	12	29.5	6
WG4PB8-1/8	8	G1/8	M15x1.25	19	17	8	25.0	6
WG4PB8-1/4	8	G1/4	M15x1.25	19	19	12	30.0	6
WG4PB10-3/8	10	G3/8	M18x1	22	22	12	34.0	8
WG4PB12-3/8	12	G3/8	M23x1.5	27	24	12	35.0	10
WG4PB12-1/2	12	G1/2	M23x1.5	27	27	14	40.0	10

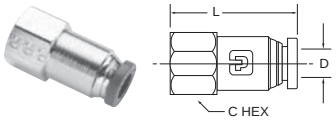

66PLP Female Connector

Part No.	Tube Size (In.)	Pipe Thread (NPTF)	C Hex	L	Flow Dia. D
66PLP-2-2	1/8	1/8	9/16	1.17	.094
66PLP-2-4	1/8	1/4	11/16	1.34	.094
66PLP-3-2	3/16	1/8	9/16	1.13	.156
66PLP-5/32-2	5/32	1/8	9/16	1.17	.125
66PLP-5/32-4	5/32	1/4	11/16	1.38	.125
66PLP-4-2	1/4	1/8	9/16	1.17	.188
66PLP-4-4	1/4	1/4	11/16	1.38	.188
66PLP-5-2	5/16	1/8	9/16	1.25	.250
66PLP-5-4	5/16	1/4	11/16	1.45	.250
66PLP-6-4	3/8	1/4	11/16	1.46	.312
66PLP-6-6	3/8	3/8	13/16	1.51	.312

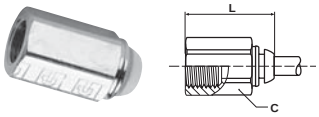

G4PB Female Connector BSPP

Part No.	Tube Size (mm)	BSPP	C Hex	L
G4PB4-1/8	4	1/8	14	26.0
G4PB6-1/8	6	1/8	14	27.5
G4PB6-1/4	6	1/4	17	33.0
G4PB8-1/8	8	1/8	17	29.0
G4PB8-1/4	8	1/4	17	33.0

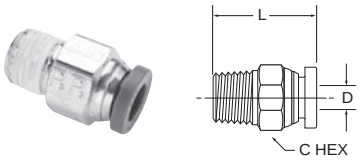

W68PLP Male Connector

Part No.	Tube Size (In.)	Pipe Thd (NPTF)	C Hex	I	Flow Dia. D
W68PLP-2-1	1/8	1/16	3/8	.79	.094
W68PLP-2-2	1/8	1/8	7/16	.79	.094
W68PLP-2-4	1/8	1/4	9/16	1.02	.094
W68PLP-3-2	3/16	1/8	7/16	.85	.156
W68PLP-3-4	3/16	1/4	9/16	1.01	.156
W68PLP-5/32-1	5/32	1/16		.88	.940
W68PLP-5/32-2	5/32	1/8	7/16	.80	.125
W68PLP-5/32-4	5/32	1/4	9/16	1.03	.125
W68PLP-4-1	1/4	1/16	1/2	1.07	.141
W68PLP-4-2	1/4	1/8	1/2	.89	.188
W68PLP-4-4	1/4	1/4	9/16	1.00	.188
W68PLP-4-6	1/4	3/8	3/4	1.04	.188
W68PLP-5-2	5/16	1/8	9/16	1.18	.250
W68PLP-5-4	5/16	1/4	9/16	1.04	.250
W68PLP-5-6	5/16	3/8	11/16	1.04	.250
W68PLP-6-2	3/8	1/8	5/8	1.21	.250
W68PLP-6-4	3/8	1/4	5/8	1.08	.312
W68PLP-6-6	3/8	3/8	11/16	1.02	.312
W68PLP-6-8	3/8	1/2	7/8	1.28	.312
W68PLP-8-4	1/2	1/4	13/16	1.44	.344
W68PLP-8-6	1/2	3/8	13/16	1.24	.344
W68PLP-8-8	1/2	1/2	7/8	1.35	.375
68PLP-5/32-4LT*	5/32	1/4-28	7/16	.88	.093

*SAE-LT Threads

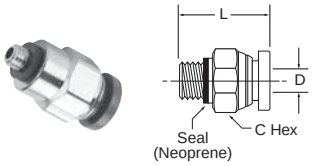

68PLP-X-0 Male Connector

Part No.	Tube Size (In.)	Pipe Thread (NPTF)	C Hex	I	Flow Dia. D
68PLP-2-0	1/8	10x32	3/8	.92	.094
68PLP-5/32-0	5/32	10x32			
68PLP-4-0	1/4	10x32	1/2	.96	.094

Parker Hannifin Corporation
Pneumatic Division
Richland, Michigan
www.parker.com/pneumatics

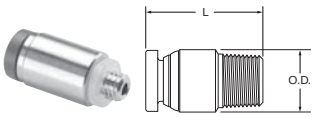

68PLPR Round Body Male Connector

Part No.	Tube Size (In.)	Thread Size NPTF	Internal Hex Broach	Body Dia. O.D.	L	Flow Dia.
68PLPR-2-0*	1/8	10-32	3/32	3/8"	.89	.094
68PLPR-5/32-0*	5/32	10-32	3/32	3/8"	.91	.094
68PLPR-4-0*	1/4	10-32	3/32	1/2"	.95	.094
W68PLPR-5/32-1	5/32	1/16	1/8	7/16"	.87	.125
W68PLPR-5/32-2	5/32	1/8	1/8	7/16"	.79	.125
W68PLPR-4-1	1/4	1/16	5/32	1/2"	1.06	.156
W68PLPR-4-2	1/4	1/8	3/16	1/2"	.88	.188
W68PLPR-4-4	1/4	1/4	3/16	5/8"	.99	.188

*10-32 seal is neoprene

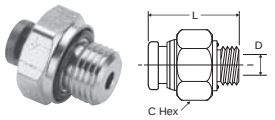

PLPHBF4-B Male Connector BSPP

Part No.	Tube Size (In.)	Pipe Thd BSPP	C Hex	I	Flow Dia. D
3-1/8PLPHBF4-B	3/16	1/8-28	11/16	.96	.156
3-1/4PLPHBF4-B	3/16	1/4-19	3/4	.97	.156
4-1/8PLPHBF4-B	1/4	1/8-28	11/16	1.13	.188
4-1/4PLPHBF4-B	1/4	1/4-19	3/4	1.13	.188
4-3/8PLPHBF4-B	1/4	3/8-19	7/8	1.13	.188
6-1/4PLPHBF4-B	3/8	1/4-19	3/4	1.26	.256
6-3/8PLPHBF4-B	3/8	3/8-19	7/8	1.26	.312
6-1/2PLPHBF4-B	3/8	1/2-14	1-1/16	1.26	.312
8-3/8PLPHBF4-B	1/2	3/8-19	7/8	1.41	.452
8-1/2PLPHBF4-B	1/2	1/2-14	1-1/16	1.37	.452

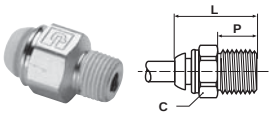

FPB Male Connector NPT

Part No.	Tube Size (mm)	NPT	C Hex	L	P	Int. Hex
W68PLP-5/32-2	4	1/8-27	7/16"	21.7	9.7	-
W68PLP-5/32-4	4	1/4-18	9/16"	28.1	14.2	-
FPB6-1/8	6	1/8-27	14	26.0	10.1	4
FPB6-1/4	6	1/4-18	14	28.5	14.6	4
FPB10-1/4	10	1/4-18	19	40.0	14.6	8
FPB10-3/8	10	3/8-18	19	34.0	14.6	8
FPB12-3/8	12	3/8-18	22	36.5	14.6	10

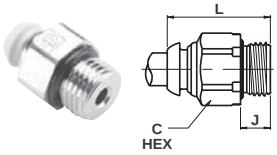

F4PB Compact Male Connector BSPP

Part No.	Tube Size (mm)	BSPP	C Hex	J	L
F4PB4-1/8	4	1/8	13	4.7	19.9
F4PB4-1/4	4	1/4	16	6.0	20.3
F4PB6-1/8	6	1/8	13	4.7	23.4
F4PB6-1/4	6	1/4	16	6.0	22.2
F4PB8-1/4	8	1/4	16	6.0	23.8
F4PB8-1/8	8	1/8	14	4.7	25.1
F4PB8-3/8	8	3/8	20	6.5	23.5
F4PB10-1/4	10	1/4	17	6.0	31.3
F4PB10-3/8	10	3/8	20	6.5	26.8
F4PB10-1/2	10	1/2	24	7.5	26.1
F4PB12-1/4	12	1/4	20	6.0	31.9
F4PB12-3/8	12	3/8	20	6.5	31.8
F4PB12-1/2	12	1/2	24	7.5	27.8
F4PB14-3/8	14	3/8	22	6.5	35.0
F4PB14-1/2	14	1/2	24	7.5	30.0

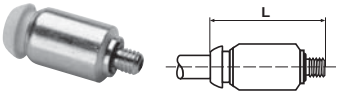

F28PB Male Connector Metric Straight Thread

Part No.	Tube Size (mm)	Thread (mm)	L
F28PB4M3	4	M3x0.5	24
F28PB4M5	4	M5x0.8	25
F28PB6M5	6	M5x0.8	25

This fitting has been designed for use where space is at a premium. It is assembled using the internal hexagon and an allen key.

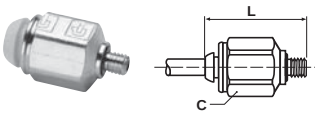

F8PB Male Connector Metric Straight Thread

Part No.	Tube Size (mm)	Thread (mm)	C Hex	L
F8PB4M5	4	M5x0.8	10	26.6
F8PB4M10	4	M10x1	14	24.0
F8PB6M5	6	M5x0.8	12	27.8
F8PB6M10	6	M10x1	14	28.0
F8PB6M12	6	M12x1.5	17	23.5
F8PB8M12	8	M12x1.5	17	27.0
F8PB8M16	8	M16x1.5	22	28.0
F8PB8M22	8	M22x1.5	27	30.0

Parker Hannifin Corporation
Pneumatic Division
Richland, Michigan
www.parker.com/pneumatics

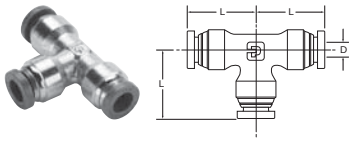

164PLP Union Tee

Part No.	Tube Size (In.)	L	Flow Dia. D
164PLP-2	1/8	.74	.094
164PLP-3	3/16	.82	.156
164PLP-5/32	5/32	.77	.125
164PLP-4	1/4	.85	.188
164PLP-5	5/16	.97	.250
164PLP-6	3/8	1.01	.250
164PLP-8	1/2	1.15	.375

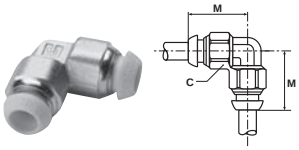

EPB 90° Union Elbow

Part No.	Tube Size (mm)	C Hex	M
EPB4	4	10	18.0
EPB5	5	12	20.5
EPB6	6	12	20.0
EPB8	8	14	22.0
EPB10	10	17	28.0
EPB12	12	22	30.0
EPB14	14	25	35.0

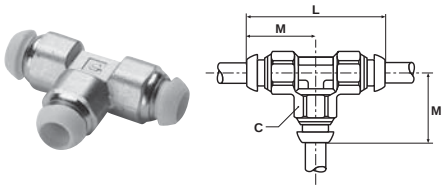

JPB Union Tee

Part No.	Tube Size (mm)	C	L	M
JPB4	4	10	36	18
JPB5	5	12	41	21
JPB6	6	12	40	20
JPB8	8	14	44	22
JPB10	10	17	56	28
JPB12	12	22	60	30
JPB14	14	25	68	34

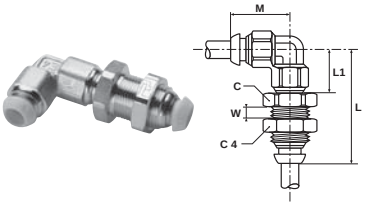

WE6PB Adjustable Bulkhead Union Elbow

Part No.	Tube Size (mm)	Thread B (mm)	C Hex	C4 Hex	L	L1	M	W	Bkhd Hole Dia.
WE6PB4	4	M11x0.75	14	16	37	18.0	18.0	6	11mm
WE6PB6	6	M13x1	17	17	39	19.5	20.5	6	13mm
WE6PB8	8	M15x1.25	19	19	43	21.5	22.5	6	15mm
WE6PB10	10	M18x1	22	22	54	22.8	28.5	8	18mm
WE6PB12	12	M23x1.5	27	27	59	30.0	30.0	10	23mm

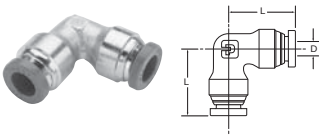

165PLP Union Elbow

Part No.	Tube Size (In.)	L	Flow Dia. D
165PLP-2	1/8	.74	.094
165PLP-5/32	5/32	.77	.125
165PLP-3	3/16	.82	.156
165PLP-4	1/4	.85	.188
165PLP-5	5/16	.97	.250
165PLP-6	3/8	1.01	.312
165PLP-8	1/2	1.15	.375

Parker Hannifin Corporation
Pneumatic Division
Richland, Michigan
www.parker.com/pneumatics

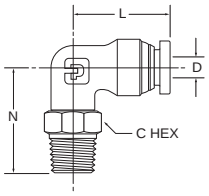

W169PLP Male Elbow Swivel 90°

Part No.	Tube Size (In.)	Pipe Thread (NPTF)	C Hex	I	N	Flow ia. D
W169PLP-2-1	1/8	1/16	3/8	.74	.93	.160
W169PLP-2-2	1/8	1/8	7/16	.74	.92	.094
169PLP-2-0*	1/8	10-32	3/8	.74	.74	.080
W169PLP-2-4	1/8	1/4	9/16	.74	1.10	.094
W169PLP-3-2	3/16	1/8	7/16	.82	.92	.156
W169PLP-5/32-1	5/32	1/16	3/8	.84	.93	.160
W169PLP-5/32-2	5/32	1/8	7/16	.77	.92	.125
W169PLP-5/32-4	5/32	1/4	9/16	.77	1.10	.125
169PLP-5/32-0*	5/32	10-32	3/8	.85	.74	.080
W169PLP-4-1	1/4	1/16	3/8	.84	.93	.160
W169PLP-4-2	1/4	1/8	7/16	.85	.92	.156
W169PLP-4-4	1/4	1/4	9/16	.85	1.10	.156
W169PLP-4-6	1/4	3/8	11/16	.85	1.19	.156
169PLP-4-0*	1/4	10-32	3/8	.85	.74	.080
W169PLP-5-2	5/16	1/8	9/16	.97	1.02	.250
W169PLP-5-4	5/16	1/4	9/16	.97	1.24	.250
W169PLP-6-2	3/8	1/8	9/16	1.01	1.02	.250
W169PLP-6-4	3/8	1/4	9/16	1.01	1.24	.250
W169PLP-6-6	3/8	3/8	11/16	1.01	1.24	.250
W169PLP-6-8	3/8	1/2	7/8	1.01	1.48	.250
W169PLP-8-4	1/2	1/4	9/16	1.15	1.28	.312
W169PLP-8-6	1/2	3/8	11/16	1.15	1.31	.312
W169PLP-8-8	1/2	1/2	7/8	1.15	1.52	.312

*10-32 seal is neoprene

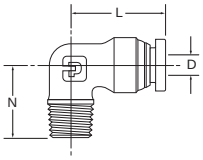

W169PLPNS Male Elbow 90°

Part No.	Tube Size (In.)	Pipe Thread (NPTF)	L	N	Flow Dia. D
W169PLPNS-2-2	1/8	1/8	.74	.67	.094
W169PLPNS5/32-2	5/32	1/8	.77	.67	.125
W169PLPNS5/32-4	5/32	1/4	.77	.87	.125
W169PLPNS-4-2	1/4	1/8	.85	.67	.188
W169PLPNS-4-4	1/4	1/4	.85	.87	.188
W169PLPNS-5-2	5/16	1/8	.97	.75	.234
W169PLPNS-5-4	5/16	1/4	.97	.94	.250
W169PLPNS-6-4	3/8	1/4	1.01	.94	.312
W169PLPNS-6-6	3/8	3/8	1.01	1.01	.312
W169PLPNS-6-8	3/8	1/2	1.01	1.27	.312
W169PLPNS-8-6	1/2	3/8	1.15	1.00	.375
W169PLPNS-8-8	1/2	1/2	1.15	1.27	.375
169PLPNS532-4LT*	5/32	1/4-28	.60	.48	.090

* SAE-LT Threads

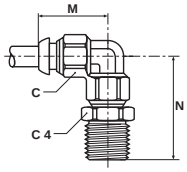

C6PB Adjustable Male Elbow NPT

Part No.	Tube Size (mm)	NPT	C Hex	C4 Hex	M	N
C6PB6-1/4	6	1/4-18	12	14	20	36.0
C6PB6-3/8	6	3/8-18	12	19	20	36.5
C6PB10-1/4	10	1/4-18	17	16	28	41.5
C6PB10-3/8	10	3/8-18	17	19	28	41.5
C6PB12-1/2	12	1/2-14	22	22	30	47.5

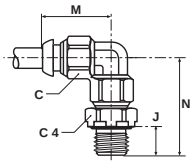

C64PB Adjustable Male Elbow BSPP

Part No.	Tube Size (mm)	BSPP	C Hex	C4 Hex	J	M	N
C64PB4-1/8	4	1/8	10	13	4.7	18	23.4
C64PB4-1/4	4	1/4	10	16	6.0	18	25.2
C64PB6-1/8	6	1/8	12	13	4.7	20	26.1
C64PB6-1/4	6	1/4	12	16	6.0	20	26.4
C64PB8-1/8	8	1/8	14	13	4.7	22	28.1
C64PB8-1/4	8	1/4	14	16	6.0	22	28.4
C64PB8-3/8	8	3/8	14	20	6.5	22	30.6
C64PB10-1/4	10	1/4	17	16	6.0	28	34.9
C64PB10-3/8	10	3/8	17	20	6.5	28	37.4
C64PB12-1/4	12	1/4	22	19	6.0	30	36.5
C64PB12-3/8	12	3/8	22	22	6.5	30	39.0
C64PB12-1/2	12	1/2	22	24	7.5	30	38.5
C64PB14-3/8	14	3/8	25	22	6.5	34	44.7
C64PB14-1/2	14	1/2	25	24	7.5	34	44.3

Parker Hannifin Corporation
Pneumatic Division
Richland, Michigan
www.parker.com/pneumatics

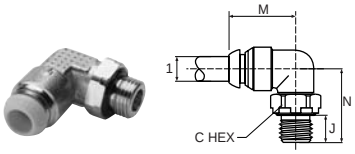

C64SPB Compact Adjustable Male Elbow BSPP

Part No.	Tube Size (mm)	BSPP	C Hex	J	M	N
C64SPB4-1/8	4	1/8	13	4.7	17	17.3
C64SPB6-1/8	6	1/8	13	4.7	22	17.3
C64SPB6-1/4	6	1/4	16	6.0	22	19.1
C64SPB8-1/8	8	1/8	13	4.7	24	16.9
C64SPB8-1/4	8	1/4	16	6.0	24	18.7
C64SPB8-3/8	8	3/8	20	6.5	24	20.7
C64SPB10-1/4	10	1/4	16	6.0	29	20.5
C64SPB10-3/8	10	3/8	20	6.5	29	22.5
C64SPB12-1/4	12	1/8	16	6.0	31	20.5
C64SPB12-3/8	12	3/8	20	6.5	31	23.2
C64SPB12-1/2	12	1/2	24	7.5	31	25.2

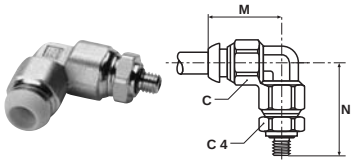

C68PB Adjustable Male Elbow Metric Straight Thread

Part No.	Tube Size (mm)	Thread (mm)	C Hex	C4 Hex	M	N
C68PB4M5	4	M5x0.8	11	10	17	18
C68PB6M5	6	M5x0.8	11	10	17	18

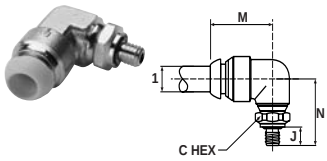

C68SPB Compact Adjustable Male Elbow Metric Straight Thread

Part No.	Tube Size (mm)	Thread (mm)	C Hex	J	M	N
C68SPB4M5	4	M5x0.8	12.5	5	17	18
C68SPB6M5	6	M5x0.8	12.5	5	17	18

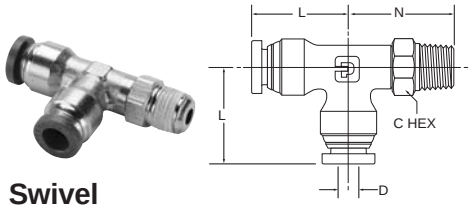

W171PLP Male Run Tee Swivel

Part No.	Tube Size (In.)	Pipe Thread (NPTF)	C Hex	L	N	Flow Dia. D
W171PLP-2-2	1/8	1/8	7/16	.74	.92	.094
W171PLP-5/32-2	5/32	1/8	7/16	.77	.92	.125
W171PLP-4-2	1/4	1/8	7/16	.85	.92	.156
W171PLP-4-4	1/4	1/4	9/16	.85	1.10	.156
W171PLP-4-6	1/4	3/8	11/16	.85	1.24	.156
W171PLP-5-2	5/16	1/8	9/16	.97	1.02	.250
W171PLP-5-4	5/16	1/4	9/16	.97	1.24	.250
W171PLP-6-4	3/8	1/4	9/16	1.01	1.24	.250
W171PLP-6-6	3/8	3/8	11/16	1.01	1.24	.250
W171PLP-8-6	1/2	3/8	11/16	1.15	1.31	.312
W171PLP-8-8	1/2	1/2	7/8	1.15	1.52	.312

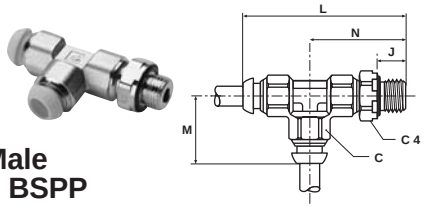

R64PB Swivel Male Branch Run Tee BSPP

Part No.	Tube Size (mm)	BSPP	C Hex	C4 Hex	J	L	M	N
R64PB4-1/8	4	1/8	10	13	4.7	41.4	18	23.4
R64PB4-1/4	4	1/4	10	16	6.0	43.2	18	25.2
R64PB6-1/8	6	1/8	12	13	4.7	46.1	20	26.1
R64PB6-1/4	6	1/4	12	16	6.0	46.4	20	26.4
R64PB8-1/8	8	1/8	14	13	4.7	50.1	22	28.1
R64PB8-1/4	8	1/4	14	16	6.0	50.4	22	28.4
R64PB8-3/8	8	3/8	14	20	6.5	52.6	22	30.6
R64PB10-1/4	10	1/4	17	16	6.0	62.9	28	34.9
R64PB10-3/8	10	3/8	17	20	6.5	65.4	28	37.4
R64PB12-1/4	12	1/4	22	19	6.0	65.5	29	36.5
R64PB12-3/8	12	3/8	22	22	6.5	68.0	29	39.0
R64PB14-3/8	14	3/8	25	22	6.5	78.7	34	44.7
R64PB14-1/2	14	1/2	25	24	7.5	78.3	34	44.3

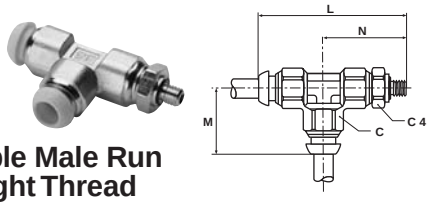

R68PB Adjustable Male Run Tee Metric Straight Thread

Part No.	Tube Size (mm)	Thread (mm)	C Hex	C4 Hex	L	M	N
R68PB4M3	4	M3x0.5	10	10	41.0	18	23.0
R68PB4M5	4	M5x0.8	10	10	42.5	18	24.5
R68PB6M5	6	M5x0.8	12	11	45.5	20	25.5

Parker Hannifin Corporation
Pneumatic Division
Richland, Michigan
www.parker.com/pneumatics

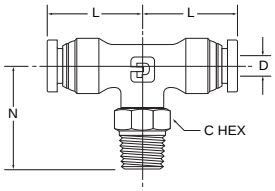

W172PLP Male Branch Tee Swivel

Part No.	Tube Size (In.)	Pipe Thread (NPTF)	C Hex	L	N	Flow Dia. D
W172PLP-2-2	1/8	1/8	7/16	.74	.92	.094
W172PLP-3-2	3/16	1/8	7/16	.82	.92	.156
W172PLP-5/32-2	5/32	1/8	7/16	.77	.92	.125
W172PLP-4-2	1/4	1/8	7/16	.85	.92	.156
W172PLP-4-4	1/4	1/4	9/16	.85	1.10	.156
W172PLP-4-6	1/4	3/8	11/16	.85	1.10	.156
W172PLP-5-2	5/16	1/8	9/16	.97	1.02	.250
W172PLP-5-4	5/16	1/4	9/16	.97	1.24	.250
W172PLP-6-4	3/8	1/4	9/16	1.01	1.24	.250
W172PLP-6-6	3/8	3/8	11/16	1.01	1.24	.250
W172PLP-8-4	1/2	1/4	9/16	1.15	1.30	.312
W172PLP-8-6	1/2	3/8	11/16	1.15	1.31	.312
W172PLP-8-8	1/2	1/2	7/8	1.15	1.52	.312

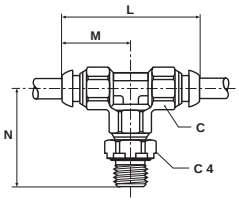

S64PB Swivel Male Branch Tee BSPP

Part No.	Tube Size (mm)	BSPP	C Hex	C4 Hex	L	M	N
S64PB4-1/8	4	1/8	10	13	36	18	23.4
S64PB4-1/4	4	1/4	10	16	36	18	25.2
S64PB6-1/8	6	1/8	12	13	40	20	26.1
S64PB6-1/4	6	1/4	12	16	40	20	26.4
S64PB8-1/8	8	1/8	14	13	44	22	28.1
S64PB8-1/4	8	1/4	14	16	44	22	28.4
S64PB8-3/8	8	3/8	14	20	44	22	30.6
S64PB10-1/4	10	1/4	17	16	56	28	34.9
S64PB10-3/8	10	3/8	17	20	56	28	37.4
S64PB12-1/4	12	1/4	22	19	58	29	36.5
S64PB12-3/8	12	3/8	22	22	58	29	39.0
S64PB14-3/8	14	3/8	25	22	68	34	44.7
S64PB14-1/2	14	1/2	25	24	68	34	44.3

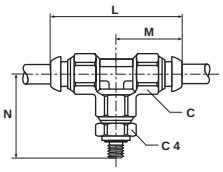

S68PB Adjustable Male Branch Tee Metric Straight Thread

Part No.	Tube Size (mm)	Thread (mm)	C Hex	C4 Hex	L	M	N
S68PB4M3	4	M3X0.5	10	10	36	18	23.0
S68PB4M5	4	M5X0.8	10	10	36	18	24.5
S68PB6M5	6	M5X0.8	12	11	40	20	25.5

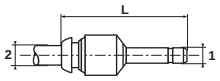

TEPB Tube End Expander

Part No.	Tube 1 Size (mm)	Tube 2 Size (mm)	L
TEPB4-6	4	6	39

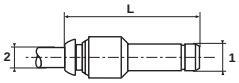

TRPB Tube End Reducer

Part No.	Tube 1 Size (mm)	Tube 2 Size (mm)	L
TRPB6-4	6	4	40.0
TRPB8-4	8	4	39.5
TRPB8-6	8	6	41.5
TRPB10-4	10	4	37.0
TRPB10-6	10	6	43.0
TRPB10-8	10	8	47.5
TRPB12-6	12	6	38.0
TRPB12-8	12	8	44.0
TRPB12-10	12	10	52.0
TRPB14-8	14	8	41.0
TRPB14-10	14	10	51.0
TRPB14-12	14	12	55.0

Parker Hannifin Corporation
Pneumatic Division
Richland, Michigan
www.parker.com/pneumatics

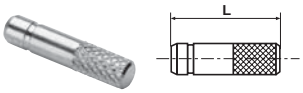

FNPB Plug

Part No.	Tube Size (mm)	L
FNPB4	4	27
FNPB6	6	27
FNPB8	8	30
FNPB10	10	30
FNPB12	12	35
FNPB14	14	36

DB Dust/Weld Spatter Boot

Part No.	Tube Size (In.)	L	D
DB-4	1/4	.50	.53
DB-6	3/8	.50	.76
DB-8	1/2	.50	.88

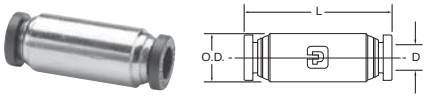

62PW Union (Nickel Plated)

Part No.	Tube Size (In.)	O.D.	L	Flow Dia. D
62PW-4	1/4	.500	1.43	.188
62PW-5	5/16	.562	1.65	.250
62PW-6	3/8	.625	1.66	.312
62PW-8	1/2	.750	1.82	.375

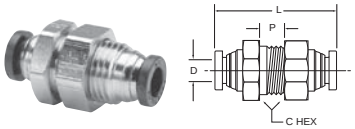

62PWBH Bulkhead Union (Nickel Plated)

Part No.	Tube Size (In.)	Bulkhead Hole Dia. B	C Hex	P Max.	L	D
62PWBH-4	1/4	9/16	11/16	.29	1.43	.188
62PWBH-5	5/16	5/8	3/4	.60	1.65	.250
62PWBH-6	3/8	3/4	7/8	.54	1.66	.312
62PWBH-8	1/2	7/8	1	.66	2.04	.375

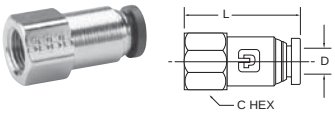

66PW Female Connector (Nickel Plated)

Part No.	Tube Size (In.)	Pipe Thread (NPTF)	C Hex	L	Flow Dia. D
66PW-4-2	1/4	1/8	9/16	1.17	.188
66PW-4-4	1/4	1/4	11/16	1.38	.188
66PW-5-2	5/16	1/8	9/16	1.25	.250
66PW-5-4	5/16	1/4	11/16	1.45	.250
66PW-6-4	3/8	1/4	11/16	1.46	.312
66PW-6-6	3/8	3/8	13/16	1.51	.312

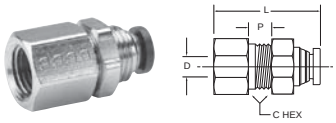

66PWBH Female Bulkhead (Nickel Plated)

Part No.	Tube Size (In.)	Thread (NPTF)	C Hex	P Max.	L	Flow Dia. D	Bulkhead Hole Dia.
66PWBH-4-4	1/4	1/4	11/16	.24	1.35	.188	9/16
66PWBH-6-6	3/8	3/8	1	.22	1.47	.312	7/8
66PWBH-8-6	1/2	3/8	1 1/4	.35	1.56	.344	1

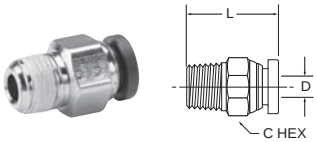

W68PW Male Connector (Nickel Plated)

Part No.	Tube Size (In.)	Thread (NPTF	C Hex	L	Flow Dia. D
W68PW-4-2	1/4	1/8	1/2	.89	.188
W68PW-4-4	1/4	1/4	9/16	1.00	.188
W68PW-4-6	1/4	3/8	3/4	1.04	.188
W68PW-5-2	5/16	1/8	9/16	1.18	.250
W68PW-5-4	5/16	1/4	9/16	1.04	.250
W68PW-5-6	5/16	3/8	11/16	1.04	.250
W68PW-6-2	3/8	1/8	5/8	1.21	.250
W68PW-6-4	3/8	1/4	5/8	1.08	.312
W68PW-6-6	3/8	3/8	11/16	1.02	.312
W68PW-6-8	3/8	1/2	7/8	1.28	.312
W68PW-8-4	1/2	1/4	13/16	1.44	.344
W68PW-8-6	1/2	3/8	13/16	1.24	.344
W68PW-8-8	1/2	1/2	7/8	1.35	.375

Parker Hannifin Corporation
Pneumatic Division
Richland, Michigan
www.parker.com/pneumatics

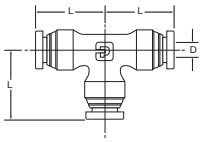

164PW Union Tee (Nickel Plated)

Part No.	Tube Size (In.)	L	Flow Dia. D
164PW-4	1/4	.85	.188
164PW-5	5/16	.97	.250
164PW-6	3/8	1.01	.250
164PW-8	1/2	1.15	.375

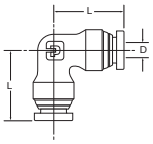

165PW Union Elbow (Nickel Plated)

Part No.	Tube Size (In.)	L	Flow Dia. D
165PW-4	1/4	.85	.188
165PW-5	5/16	.97	.250
165PW-6	3/8	1.01	.312
165PW-8	1/2	1.15	.375

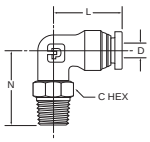

W169PW Male Elbow Swivel 90° (Nickel Plated)

Part No.	Pipe Size (In.)	Thread (NPTF)	C Hex	L	N	Flow Dia. D
W169PW-4-2	1/4	1/8	7/16	.85	.92	.156
W169PW-4-4	1/4	1/4	9/16	.85	1.10	.156
W169PW-4-6	1/4	3/8	11/16	.85	1.19	.156
W169PW-5-2	5/16	1/8	9/16	.97	1.02	.250
W169PW-5-4	5/16	1/4	9/16	.97	1.24	.250
W169PW-6-2	3/8	1/8	9/16	1.01	1.02	.250
W169PW-6-4	3/8	1/4	9/16	1.01	1.24	.250
W169PW-6-6	3/8	3/8	11/16	1.01	1.24	.250
W169PW-6-8	3/8	1/2	7/8	1.01	1.48	.250
W169PW-8-4	1/2	1/4	9/16	1.15	1.28	.312
W169PW-8-6	1/2	3/8	11/16	1.15	1.31	.312
W169PW-8-8	1/2	1/2	7/8	1.15	1.52	.312

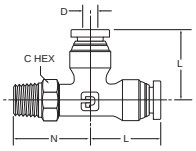

W171PW Male Run Tee Swivel (Nickel Plated)

Part No.	Tube Size (In.)	Pipe Thread (NPTF)	C Hex	L	N	Flow Dia. D
W171PW-4-2	1/4	1/8	7/16	.85	.92	.156
W171PW-4-4	1/4	1/4	9/16	.85	1.10	.156
W171PW-4-6	1/4	3/8	11/16	.85	1.24	.156
W171PW-5-2	5/16	1/8	9/16	.97	1.02	.250
W171PW-5-4	5/16	1/4	9/16	.97	1.24	.250
W171PW-6-4	3/8	1/4	9/16	1.01	1.24	.250
W171PW-6-6	3/8	3/8	11/16	1.01	1.24	.250
W171PW-8-6	1/2	3/8	11/16	1.15	1.31	.312
W171PW-8-8	1/2	1/2	7/8	1.15	1.52	.312

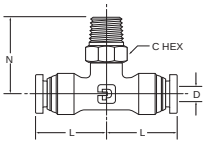

W172PW Male Branch Tee Swivel (Nickel Plated)

Part No.	Pipe Size (In.)	Thread (NPTF)	C Hex	L	N	Flow Dia. D
W172PW-4-2	1/4	1/8	7/16	.85	.92	.156
W172PW-4-4	1/4	1/4	9/16	.85	1.10	.156
W172PW-4-6	1/4	3/8	11/16	.85	1.10	.156
W172PW-5-2	5/16	1/8	9/16	.97	1.02	.250
W172PW-5-4	5/16	1/4	9/16	.97	1.24	.250
W172PW-6-4	3/8	1/4	9/16	1.01	1.24	.250
W172PW-6-6	3/8	3/8	11/16	1.01	1.24	.250
W172PW-8-4	1/2	1/4	9/16	1.15	1.30	.312
W172PW-8-6	1/2	3/8	11/16	1.15	1.31	.312
W172PW-8-8	1/2	1/2	7/8	1.15	1.52	.312

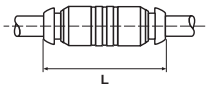

HPB Equal Union

Part No.	Tube Size (mm)	L
HPB6	6	36.0
HPB8	8	38.0
HPB10	10	48.0
HPB12	12	48.0

Parker Hannifin Corporation
Pneumatic Division
Richland, Michigan
www.parker.com/pneumatics

Industrial Pipe Fittings	**207ACBH** Anchor Coupling Page N40	**207P** Pipe Coupling Page N40	**208P** Reducer Coupling Page N40	**209P** Pipe Bushing Page N40	**210P** Lock Nut Page N40
211P Square-head Plug Page N40	**212P** Union Page N40	**213P** Cap Page N41	**215PN** Close Nipple Page N41	**215PNL** Long Nipple Page N41	**216P** Hex Nipple Page N41
218P Hex-Head Plug Page N41	**219P** Countersunk Plug Page N41	**220P** Slotted-Head Plug Page N42	**222P** Adapter Page N42	**1200P-2200P** Union Elbow Page N42	**1202P-2202P** Street Elbow Page N42
1203P-2203P Union Tee Page N42	**1204P** Male Elbow Page N42	**2224P** Male Branch Tee Page N43	**2225P** Street Tee Page N43	**1201P-2201P** 45° Female Elbow Page N43	**2205P** Cross Page N43
2214P 45° Street Elbow Page N43	**BSP Adapters**	**DD44** Elbow Page N45	**FF44** BSPP Hex Nipple Page N45	**FHG4** Female-BSPP Page N45	**GG44** Coupling BSPP Page 45
KMM004 BSPP Cross 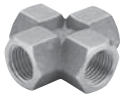 Page N45	**MM0444** Bulkhead Union Page N45	**WGG44** Bulkhead Union Page N45			

Parker Hannifin Corporation
Pneumatic Division
Richland, Michigan
www.parker.com/pneumatics

Features

Pipe Fittings

Materials of Construction	
Fittings:	CA345, CA360, CA377

Nomenclature	
Example: 2214P–2–2	**Attribute:**
2	Extrusion
1 (not shown)	Forging
214	45° Street Elbow
p	Pipe
2	1/8" Pipe Thread
2	1/8" Pipe Thread

Applicable Tube	
Tube Material:	Copper, brass, iron pipe
Thread size:	1/8, 1/4, 3/8, 1/2, 3/4, 1

Specifications	
Pressure Range:	Up to 1,000 PSI
Temperature Ranges:	-65° to +250°F

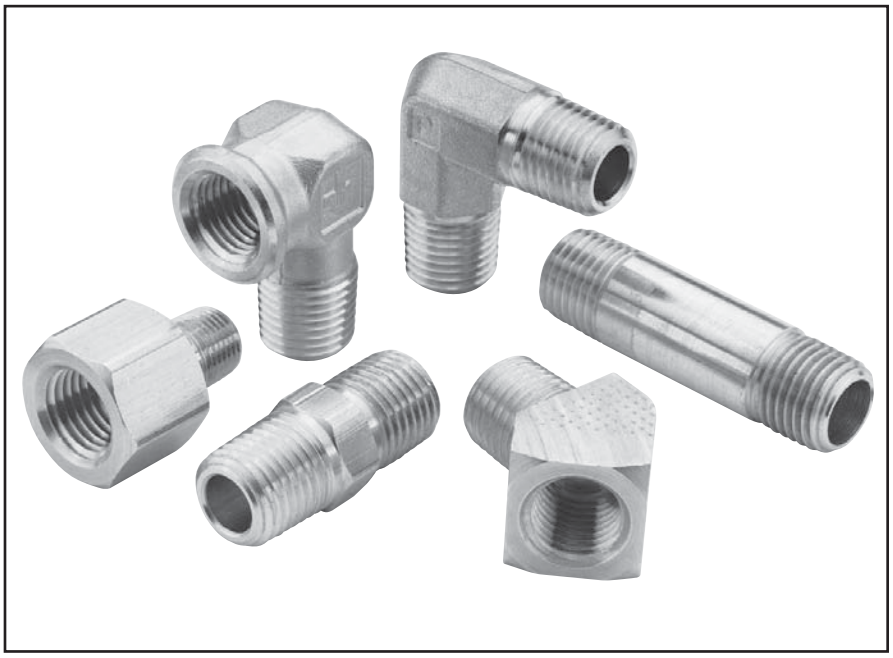

All pipe fittings meet functional requirements of SAE J530 and SAE J531. Threads are made to Dryseal standards.

Pipe thread assembly guide (turns method) for Dryseal threads with pre-applied Vibra Seal

Straight Fittings

1. Tighten external thread into the internal thread.
2. Tighten an additional 2 revolutions with a wrench up to 1⁄2 in. male pipe thread. Above 1⁄2 in., 1-1⁄2 to 2-1⁄2 revolutions.

Elbow or Tee Fittings

1. Tighten external thread into the internal thread.
2. Tighten an additional 1 to 1-1⁄2 revolutions with a wrench.
3. Tighten fitting, Clockwise, to Align with Tubing (never counter clockwise).

Note: To minimize the possibility of a leaking threaded joint after assembling male to female pipe threads, neither end should be backed out (loosened) once the assembly has been made.

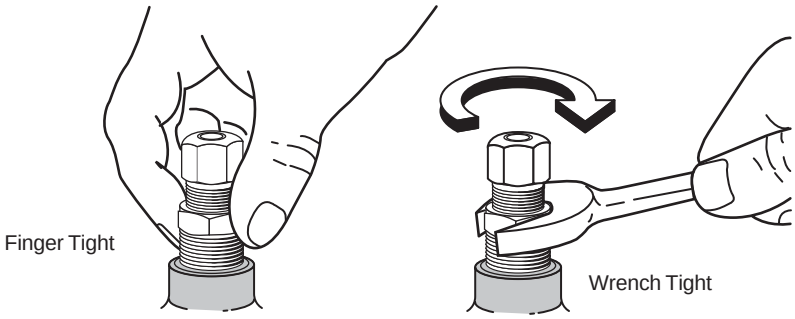

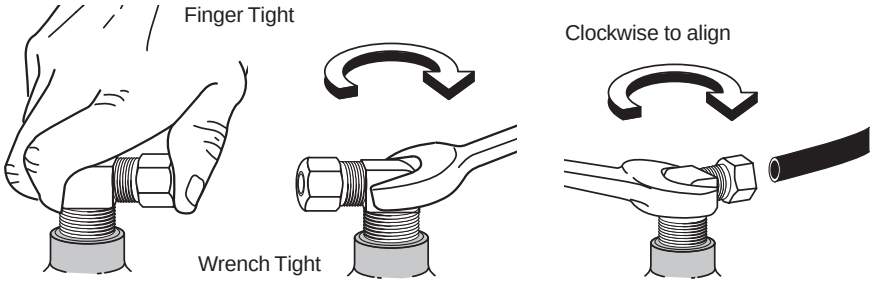

Parker Hannifin Corporation
Pneumatic Division
Richland, Michigan
www.parker.com/pneumatics

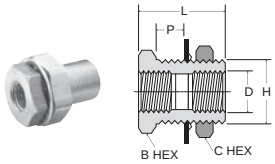

207ACBH Anchor Coupling

Part No.	Female Pipe Thread	Straight Thread	Max. Bulk Head P	B Hex	C Hex	L	Blkhd Hole Dia. H	Flow Dia. D
207ACBH-2	1/8	5/8-18	.89	7/8	15/16	1.50	5/8	.339
207ACBHS-2	1/8	5/8-18	.35	7/8	15/16	.96	5/8	.339
207ACBH-4	1/4	3/4-16	.81	1	1-1/8	1.50	3/4	.441
207ACBHS-4	1/4	3/4-16	.26	1	1	.94	3/4	.441
207ACBH-6	3/8	1-14	.62	1-1/8	1-1/4	1.31	1	.571
207ACBH-8	1/2	1-1/8-14	.75	1-1/4	1-3/8	1.50	1-1/8	.703
207ACBH-12	3/4	1-5/16-12	.65	1-1/2	1-1/2	1.50	1-5/16	.906
207ACBH-16*	1	1-5/8-14	1.00	2	2	1.68	1-5/8	1.140

*Lock Washer not Available

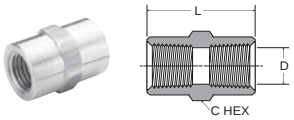

207P Coupling

Part No.	Pipe Thread	C Hex	L	Flow Dia. D
207P-2	1/8	9/16	.75	.339
207P-4	1/4	3/4	1.12	.441
207P-6	3/8	7/8	1.12	.571
207P-8	1/2	1-1/16	1.50	.703
207P-12	3/4	1-3/8	1.53	.906

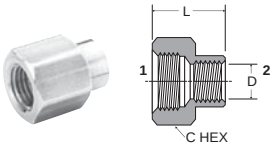

208P Reducer Coupling

Part No.	1 Pipe Thread	2 Pipe Thread	C Hex	L	Flow Dia. D
208P-4-2	1/4	1/8	3/4	.97	.339
208P-6-4	3/8	1/4	7/8	1.16	.441
208P-8-4	1/2	1/4	1-1/16	1.28	.441
208P-8-6	1/2	3/8	1-1/16	1.38	.571
208P-12-6	3/4	3/8	1-3/8	1.32	.571
208P-12-8	3/4	1/2	1-3/8	1.50	.703

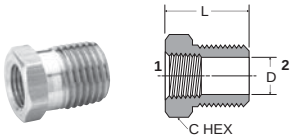

209P Bushing

Part No.	1 Pipe Thread	2 Pipe Thread	C Hex	L	Flow Dia. D
209P-4-2	1/8	1/4	9/16	.75	.339
209P-6-2	1/8	3/8	11/16	.75	.339
209P-6-4	1/4	3/8	3/4	.75	.441
209P-8-2	1/8	1/2	7/8	1.00	.339
209P-8-4	1/4	1/2	7/8	1.00	.441
209P-8-6	3/8	1/2	7/8	1.00	.571
209P-12-2	1/8	3/4	1-1/8	1.00	.339
209P-12-4	1/4	3/4	1-1/8	1.00	.441
209P-12-6	3/8	3/4	1-1/8	1.00	.571
209P-12-8	1/2	3/4	1-1/8	1.00	.703
209P-16-8	1/2	1	1-3/8	1.31	.703
209P-16-12	3/4	1	1-3/8	1.31	.906

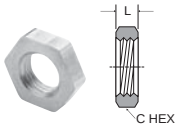

210P Lock Nut

Part No.	Pipe Thread	C Hex	L
210P-2	1/8 NPSL	11/16	.19
210P-4	1/4 NPSL	7/8	.25
210P-6	3/8 NPSL	1	.25
210P-8	1/2 NPSL	1-1/8	.25

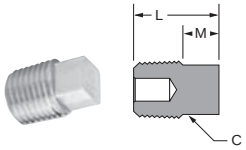

211P Square-Head Plug

Part No.	Pipe Thread	C	L	M
211P-2	1/8	9/32	.59	.25
211P-4	1/4	3/8	.80	.29
211P-6	3/8	7/16	.83	.32
211P-8	1/2	9/16	1.07	.39
211P-12	3/4	5/8	1.14	.45

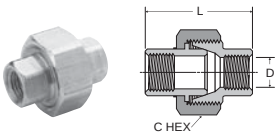

212P Union

Part No.	Pipe Thread	C Hex	L	D
212P-4	1/4	1-3/16	1.54	.441
212P-6	3/8	1-1/4	1.76	.571

Parker Hannifin Corporation
Pneumatic Division
Richland, Michigan
www.parker.com/pneumatics

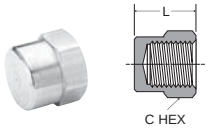

213P Cap

Part No.	Pipe Thread	C Hex	L
213P-2	1/8	9/16	.50
213P-4	1/4	11/16	.63
213P-6	3/8	13/16	.63
213P-8	1/2	1-1/16	.87
213P-12	3/4	1-1/4	.89

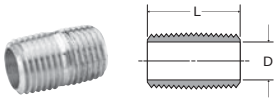

215PN Close Nipple

Part No.	Pipe Thread	L	Flow Dia. D
215PN-2	1/8	.75	.281
215PN-4	1/4	.88	.375
215PN-6	3/8	1.00	.500
215PN-8	1/2	1.13	.625
215PN-12	3/4	1.31	.750

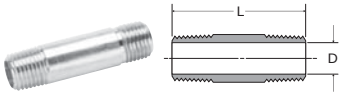

215PNL Long Nipple

Part No.	Pipe Thread	L	Flow Dia. D
215PNL-2-15	1/8	1-1/2	.250
215PNL-4-15	1/4	1-1/2	.375
215PNL-6-15	3/8	1-1/2	.500
215PNL-8-15	1/2	1-1/2	.625
215PNL-2-20	1/8	2	.250
215PNL-4-20	1/4	2	.375
215PNL-6-20	3/8	2	.500
215PNL-8-20	1/2	2	.625
215PNL-2-25	1/8	2-1/2	.250
215PNL-4-25	1/4	2-1/2	.375
215PNL-6-25	3/8	2-1/2	.500
215PNL-8-25	1/2	2-1/2	.625
215PNL-2-30	1/8	3	.250
215PNL-4-30	1/4	3	.375
215PNL-6-30	3/8	3	.500
215PNL-8-30	1/2	3	.625
215PNL-2-35	1/8	3-1/2	.250
215PNL-4-35	1/4	3-1/2	.375
215PNL-6-35	3/8	3-1/2	.500
215PNL-8-35	1/2	3-1/2	.625

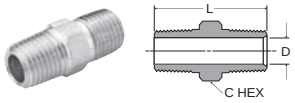

216P Hex Nipple

Part No.	Pipe Thread	C Hex	L	Flow Dia. D
216P-2	1/8	7/16	.97	.220
216P-4	1/4	9/16	1.38	.314
216P-6	3/8	11/16	1.41	.440
216P-8	1/2	7/8	1.81	.564
216P-12	3/4	1-1/16	1.81	.752

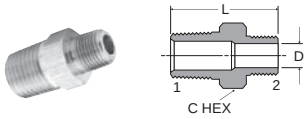

216P Hex Nipple Reducers

Part No.	1 Pipe Thread	2 Pipe Thread	C Hex	L	Flow Dia. D
216P-4-2	1/4	1/8	9/16	1.19	.220
216P-6-2	3/8	1/8	11/16	1.22	.220
216P-6-4	3/8	1/4	11/16	1.41	.314
216P-8-4	1/2	1/4	7/8	1.62	.314
216P-8-6	1/2	3/8	7/8	1.62	.440
216P-12-8	3/4	1/2	1-1/16	1.80	.564

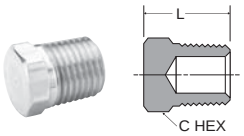

218P Hex-Head Plug

Part No.	Pipe Thread	C Hex	L
218P-2	1/8	7/16	.560
218P-4	1/4	9/16	.747
218P-6	3/8	11/16	.780
218P-8	1/2	7/8	.970
218P-12	3/4	1-1/16	1.054

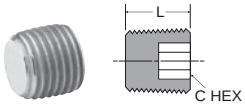

219P Countersunk Hex-Head Plug

Part No.	Pipe Thread	C Hex	L
219P-2	1/8	3/16	.30
219P-4	1/4	1/4	.46
219P-6	3/8	5/16	.46
219P-8	1/2	3/8	.61
219P-12	3/4	9/16	.62

Parker Hannifin Corporation
Pneumatic Division
Richland, Michigan
www.parker.com/pneumatics

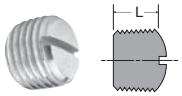

220P Slotted-Head Plug

Part No.	Pipe Thread	L
220P-2	1/8	.31
220P-4	1/4	.42
220P-6	3/8	.43

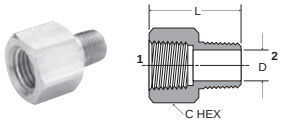

222P Adapter

Part No.	1 Pipe Thread	2 Pipe Thread	C Hex	L	Flow Dia. D
222P-2-2	1/8	1/8	9/16	.88	.220
222P-4-2	1/4	1/8	3/4	1.06	.220
222P-4-4	1/4	1/4	3/4	1.25	.314
222P-6-2	3/8	1/8	7/8	1.10	.220
222P-6-4	3/8	1/4	7/8	1.25	.314
222P-6-6	3/8	3/8	7/8	1.25	.440
222P-8-4	1/2	1/4	1	1.47	.314
222P-8-6	1/2	3/8	1-1/16	1.47	.440
222P-8-8	1/2	1/2	1-1/16	1.66	.564
222P-12-6	3/4	3/8	1-3/8	1.50	.440
222P-12-8	3/4	1/2	1-3/8	1.69	.564
222P-12-12	3/4	3/4	1-3/8	1.69	.752

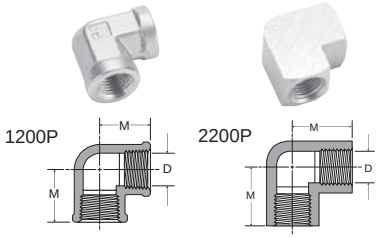

1200P-2200P 90° Union Elbow

Part No.	Pipe Thread	M	Flow Dia. D
1200P-2-2	1/8	.56	.329
2200P-2-2	1/8	.55	.339
1200P-4-4	1/4	.81	.441
2200P-4-4	1/4	.78	.441
1200P-6-6	3/8	.84	.571
2200P-6-6	3/8	.84	.571
2200P-8-8	1/2	1.07	.703

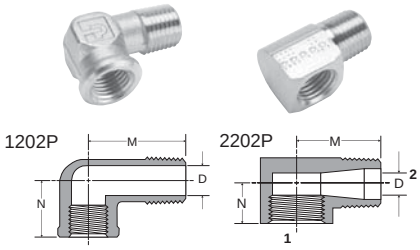

1202P-2202P 90° Street Elbow

Part No.	1 Pipe Thread	2 Pipe Thread	M	N	Flow Dia. D
1202P-2-2	1/8	1/8	.81	.56	.22
2202P-2-2	1/8	1/8	.62	.48	.22
2202PA-2-2*	1/8	1/8	.66	.48	.22
2202P-4-2	1/4	1/8	.72	.45	.23
1202P-4-4	1/4	1/4	1.08	.69	.31
2202P-4-4	1/4	1/4	.91	.45	.34
2202PA-4-4*	1/4	1/4	.91	.72	.31
2202P-4-6	1/4	3/8	.97	.78	.43
1202P-6-4	3/8	1/4	1.25	.78	.31
1202P-6-6	3/8	3/8	1.25	.78	.42
2202P-6-6	3/8	3/8	.98	.54	.41
2202PA-6-6*	3/8	3/8	.97	.78	.43

*Meets SAE Dimensions

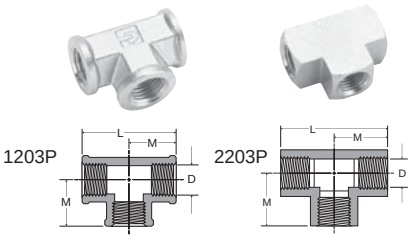

1203P-2203P Union Tee

Part No.	Pipe Thread	L	M	Flow Dia. D
1203P-2	1/8	1.12	.56	.339
2203P-2	1/8	1.06	.53	.339
1203P-4	1/4	1.38	.69	.441
2203P-4	1/4	1.52	.76	.441
2203P-6	3/8	1.68	.84	.571
1203P-8	1/2	2.14	1.07	.703
2203P-8	1/2	2.14	1.07	.703
2203P-12	3/4	2.28	1.14	.906

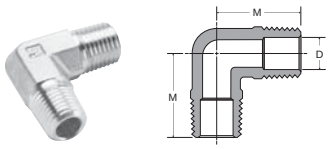

1204P Male Elbow

Part No.	Pipe Thread	M	Flow Dia. D
1204P-2	1/8	.71	.220
1204P-4	1/4	1.09	.312
1204P-6	3/8	1.09	.408
1204P-8	1/2	1.41	.502

Parker Hannifin Corporation
Pneumatic Division
Richland, Michigan
www.parker.com/pneumatics

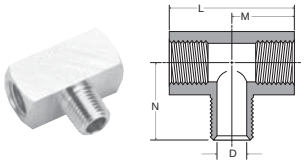

2224P Male Branch Tee

Part No.	Pipe Thread	L	M	N	Flow Dia. D
2224P-2	1/8	1.06	.53	.66	.220
2224P-4	1/4	1.52	.76	.91	.314
2224P-6	3/8	1.68	.84	.97	.440
2224P-8	1/2	2.18	1.09	1.25	.564
2224P-12	3/4	2.32	1.16	1.38	.752

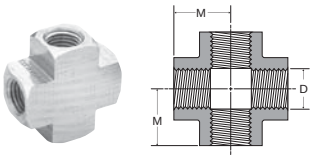

2205P Cross

Part No.	Pipe Thread	M	Flow Dia. D
2205P-2	1/8	.53	.339
2205P-4	1/4	.75	.441
2205P-6	3/8	.81	.571
2205P-8	1/2	1.07	.703
2205P-12	3/4	1.14	.906

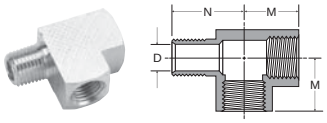

2225P Street Tee

Part No.	Pipe Thread	M	N	Flow Dia. D
2225P-2	1/8	.53	.66	.220
2225P-4	1/4	.76	.91	.314
2225P-6	3/8	.84	.98	.440
2225P-8	1/2	1.07	1.26	.564
2225P-12	3/4	1.14	1.38	.752

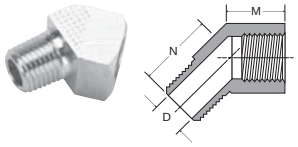

2214P 45° Street Elbow

Part No.	Pipe Thread	M	N	Flow Dia. D
2214P-2-2	1/8	.38	.50	.220
2214P-4-4	1/4	.54	.70	.314
2214P-6-6	3/8	.56	.78	.440
2214P-8-8	1/2	.73	1.00	.564

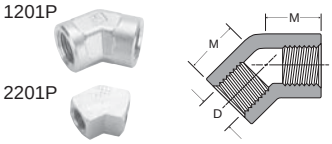

1201P-2201P
45° Female Elbow

Part No.	Pipe Thread	M	Flow Dia. D
2201P-2-2	1/8	.43	.339
1201P-8-8	1/2	.89	.703

Parker Hannifin Corporation
Pneumatic Division
Richland, Michigan
www.parker.com/pneumatics

Materials of Construction	
Adapters:	Brass

Applicable Tube	
Tube Material:	Copper, brass, iron pipe
NPT:	1/8, 1/4, 3/8, 1/2
BSPT:	1/8, 1/4, 3/8, 1/2, 3/4, 1
BSPP:	1/8, 1/4, 3/8, 1/2, 3/4, 1

Specifications	
Pressure Range:	Up to 1,000 PSI
Temperature Ranges:	-65° to +250°F

A comprehensive range of adapters for NPT, BSPT and BSPP pipe threads. Produced in both forgings and extrusions. Parker brass adapters are produced from forgings and extrusions to meet exacting requirements. The hot forging process increases the density of the material, refines the grain structure and improves material strength.

Parker Hannifin Corporation
Pneumatic Division
Richland, Michigan
www.parker.com/pneumatics

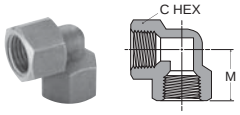

DD44 Pipe 90° Elbow BSPP

Part No.	BSPP	C Hex	M
1/8DD44B	1/8	14	15
1/4DD44B	1/4	17	18
3/8DD44B	3/8	22	22
1/2DD44B	1/2	27	29

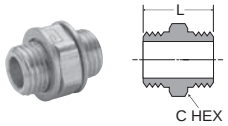

FF44 Pipe Nipples BSPP

Part No.	BSPP	C Hex	L
1/8FF44B	1/8	14	19
1/4FF44B	1/4	17	22
3/8FF44B	3/8	22	24
1/2FF44B	1/2	27	31

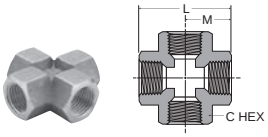

KMMOO4 Pipe Cross BSPP

Part No.	BSPP	C Hex	L	M
1/8KMMOO4B	1/8	14	29	14.5
1/4KMMOO4B	1/4	17	36	18.0
3/8KMMOO4B	3/8	22	44	22.0
1/2KMMOO4B	1/2	27	58	29.0

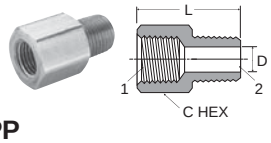

FHG4 Adapter Male NPTF BSPP

Part No.	BSPP 1	NPTF 2	C Hex	L	Flow D
1/8FHG4-B	1/8	1/8	0.562	0.87	.22
1/4FHG4-B	1/4	1/4	0.750	1.33	.31
3/8FHG4-B	3/8	3/8	0.875	1.44	.44
1/2FHG4-B	1/2	1/2	1.062	1.74	.56

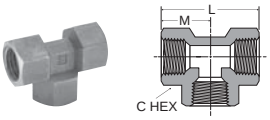

MM0444 Pipe Tee BSPP

Part No.	BSPP	C Hex	L	M
1/8MMO444B	1/8	14	29	14.5
1/4MMO444B	1/4	17	36	18.0
3/8MMO444B	3/8	22	44	22.0
1/2MMO444B	1/2	27	58	29.0
3/4MMO444B	3/4	32	62	31.0
1MMO444B	1	40	85	42.5

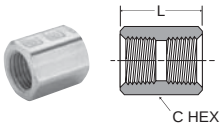

GG44 Pipe Connector BSPP

Part No.	BSPP	C Hex	L
1/8GG44B	1/8	14	16
1/4GG44B	1/4	17	20
3/8GG44B	3/8	22	24
1/2GG44B	1/2	27	28
3/4GG44B	3/4	32	32
1GG44B	1	41	36

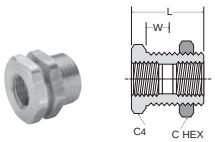

WGG44 Bulkhead Female Union BSPP

Part No.	BSPP	Straight Thread	C Hex	C4	L	W
1/8WGG44B	1/8	M16x1.5	19	22	21.5	12
1/4WGG44B	1/4	M20x1.5	24	24	22.0	12
3/8WGG44B	3/8	M23x1.5	27	27	24.0	12
1/2WGG44B	1/2	M27x1.5	32	32	28.0	14
3/4WGG44B	3/4	M34x1.5	41	41	31.0	13
1WGG44B	1	M45x2	55	55	36.0	12

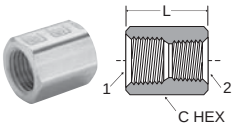

GG44 Unequal Pipe Connector BSPP

Part No.	BSPP 1	BSPP 2	C Hex	L
1/8x1/4GG44B	1/8	1/4	17	18
1/8x3/8GG44B	1/8	3/8	22	20
1/8x1/2GG44B	1/8	1/2	27	22
1/4x3/8GG44B	1/4	3/8	22	22
1/4x1/2GG44B	1/4	1/2	27	24
3/8x1/2GG44B	3/8	1/2	17	26

Parker Hannifin Corporation
Pneumatic Division
Richland, Michigan
www.parker.com/pneumatics

Notes

Parker Hannifin Corporation
Pneumatic Division
Richland, Michigan
www.parker.com/pneumatics

Index
Model Number to Page Number

Section P

Model No.	Section / Page No.
*-1/2PLPHBF4-B	N31
*-1/4PLPHBF4-B	N31
*-1/8PLPHBF4-B	N31
*-3/8PLPHBF4-B	N31
00337G100*	H14
00338 110*	H14
00338G110*	H14
00339 300*	H20
00339G300*	H20
00470 0010	J18
00470 0900	J18
00470 7020	J20
00475 0010	J18
00475 0900	J18
00475 2900	J19
00645 0060	J2
01468 0006	J2
02F1BA	C9
02FA06A	C31
02FA10A	C31
02FA22A	C31
02L*B	C119
02R113FA	C53
03047 0099	H20
03250 0*19	H14
03250 ****	H15
03251 0***	H17
03251 12*5	H17
03251 25**	H17
03251 3838	H17
033** ****	J10
034** ****	J10
036** ****	J10
03640 8100	J10
045** 00**	J3
047** 00**	J4
04L**G*	C120
05499 0000	J2
05E**A13A*	C98
05F****	C12
05R*1*A*	C68
05S2***	C156
06739 0000	J2
06A*2A13A2B*	C144
06B*2A13A2B*	C146
06D*NA	J8
06E**A13A*	A98
06F****	C14
06G*2A13A2B*	C144
06H*2A13A2B*	C146
06L**B*	C122
06P***	C162
06R*1*A*	C70
06S*****	C158
06T*****	C160
07A*2A13A2B*	C144
07B*2A13A2B*	C146
07E**A13A*	C102
07F****	C16
07G*2A13A2B*	C144
07H*2A13A2B*	C146
07L**B*	C124
07P***	C162
07R*1*A*	C72
07S*****	C158
07T*****	C160
09166 0060	J2
09F8***	C26
09L8*B*	C132
09R813**	C78
0R**B	J10
0R***B	J10
0R****B	J10
0RB**B	J10
0RB***B	J10
0RB****B	J10
1/2DD44B	N45
1/2FF44B	N45
1/2FHG4-B	N45
1/2GG44B	N45
1/2KMMOO4B	N45
1/2MMO444B	N45
1/2WGG44B	N45
1GG44B	N45
1MMO444B	N45
1WGG44B	N45
10F**E	C32
10R***P*	C80
11F**E	C36
11R***P*	C82
1200P-*-*	N42
1201P-8-8	N43
1202P-*-*	N42
1203P-*	N42
1204P-*	N42
12E**E13A*	C106
12F**E*	C38
12R***P*	C84
130-*	J9
134-*	J9
1/4DD44B	N45
1/4FF44B	N45
1/4FHG4-B	N45
1/4GG44B	N45
1/4KMMOO4B	N45
1/4MMO444B	N45
1/4WGG44B	N45
1/4x1/2GG44B	N45
1/4x3/8GG44B	N45
14A*1B13F0G*	C136
14E**B13F*	C94
14F**B**	C10
14G*1B13F0G*	C136
14K	L6, L8
14KW	L6, L8
14KY	L8
14R***F*	C54
15A*2A13A2N*	C138
15B*2A13A2N*	C140
15F**E	C34
15G*2A13A2N*	C138
15H*2A13A2N*	C140
15L**N*	C110
15R***F*	C66
16	L5
16*	L5
16-*B	L6
16-*BP	L6
161X57-SS	D13, D17
164PLP-*3	N32
164PLP-5/32	N32
164PW-*	N37
165PLP-*	N32
165PLP-5/32	N32
165PW-*	N37
169PLP*-*	N33
16A*2A13A2B*	C144
16B*2A13A2B*	C146
16G*2A13A2B*	C144
16K	L6, L8
16KW	L6, L8
16KY	L6, L8
16L**B*	C112
17	L5

* Represents an insignificant digit for model to page referencing.

P

Parker Hannifin Corporation
Pneumatic Division
Richland, Michigan
www.parker.com/pneumatics

Model No.	Section / Page No.
17*	L5
17A*2A13A2B*	C144
17B*2A13A2B*	C146
17G*2A13A2B*	C144
17H*2A13A2B*	C146
17L**B*	C114
1/8DD44B	N45
1/8FF44B	N45
1/8FHG4-B	N45
1/8GG44B	N45
1/8KMMOO4B	N45
1/8MMO444B	N45
1/8WGG44B	N45
1/8x1/2GG44B	N45
1/8x1/4GG44B	N45
1/8x3/8GG44B	N45
18B57	C77
2003P	C45
207ACBH-*	N40
207ACBH-**	N40
207ACBHS-*	N40
207P-*	N40
207P-12	N40
208P-*-*	N40
208P-**-*	N40
209P-*-*	J13, J14 , N40
209P-**-*	N40
209P-16-12	N40
20R*13G*	C64
210P-*	N40
211P-*	N40
211P-12	N40
2111P	C45
212P-*	N40
213P*	N41
213P-12	N41
215PN-*	N41
215PN-12	N41
215PNL-*-**	N41
216P-*	N41
216P-*-*	N41
216P-12	N41
216P-12-8	N41
218P-*	N41
218P-12	N41
219P-*	N41
219P-12	N41
21K	L6, L8
21KW	L6, L8
21KY	L6, L8
2200P-*-*	N42
2201P-2-2	N43
2202P-*-*	N42
2202PA-*-*	N42
2203P-*	N42
2203P-12	N42
2205P-*	N43
2205P-12	N43
220P-*	N42
2214P-*-*	N43
2224P-*	N43
2224P-12	N43
2225P-*	N43
2225P-12	N43
222P-*-*	N42
222P-**-*	N42
222P-12-12	N42
24	L5
24*	L5
24-*B	L6
24-*BP	L6
24PLP-*-*	N19
24PLP-***-**	N19
24PLP-**-**M	N19
24PLP-4-5/32	N19
24PLP-5-5/32	N19
24PLPD-*-*	N20
24PLPD-**-**	N20
24PLPD-***-**	N20
24PLPD-*-5/32	N20
25	L5
25*	L5
27E**A13A***	E8
27R11*A*	E6
3/4GG44B	N45
3/4MMO444B	N45
3/4WGG44B	N45
3/8DD44B	N45
3/8FF44B	N45
3/8FHG4-B	N45
3/8GG44B	N45
3/8KMMOO4B	N45
3/8MMO444B	N45
3/8WGG44B	N45
3/8x1/2GG44B	N45
30182-*-*B	M4
30182-*-**B	M4
30182-8-10B	M4
30182-12-8B	M4
30182-12-12B	M4
30282-*-*B	M4
30482-*-*B	M4
30682-*-*B	M5
30682-10-8B	M5
30682-1*-1*B	M5
30882-*-*B	M5
30882-10-8B	M5
30882-1*-1*B	M5
30F****P	C44
31382-*-*	M5
31F****P	C44
322PLPSP-*-*	N24
322PLPSP-**-**	N24
322PLPSP-*****	N24
322PLPSP-**-***	N24
322PLPSP-2-5/32	N24
322PLPSP-5M-5/32	N24
3250G0***	H15
3250G1***	H15
32F***P	C44
32PLCK-*	H19
32PLCK-**	H19
32PLCK-***	H19
32PLP-*	N17
32PLP-**	N17
32PLP-*-*	N17
32PLP-***	N17
32PLP-**-**	N17
32PLP-***-**	N17
32PLP-***-***	N17
32PLP-5/32	N17
32PLP-5/32-*	N17
32PLPBH-*	N19
32PLPBH-**	N19
32PLPBH-***	N19
32PLPBH-5/32	N19
32PLPDRC-**	N24
32PLPDRC-5	N24
32PLPDRC-5/32	N24
32PLPRC-*	N24
32PLPRC-**	N24
32PLPRC-5/32	N24
32PLPSP-*-*	N23
32PLPSP-**-**	N23
32PLPSP-**-**	N23
32PLPSP-10M-8M	N23
32PLPSP-12M-10M	N23
32PLPSP-4-5/32	N23
32PLPSP-4-6M	N23
347PLP-*	N20
347PLP-**	N20
347PLP-**-**	N20
347PLP-5/32	N20
362PLP-*	N18
362PLP-*	N18
362PLP-**	N18
362PLP-*-*	N18
362PLP-***	N18
362PLP-**-**	N18
362PLP-**-***	N18
362PLP-***-***	N18
362PLP-5/32	N18
362PLP-5/32-4	N18
362PLPD-**	N19
362PLPD-**-**	N19
362PLPDSP-6M-4M	N22
362PLPSP-*	N22
362PLPSP-**	N22
362PLPSP-***	N22
362PLPSP-**-**	N22
362PLPSP-**-***	N22
362PLPSP-***-***	N22
362PLPSP-5/32	N22
364PLP-*	N18
364PLP-**	N18
364PLP-*-*	N18
364PLP-**-**	N18
364PLP-**-***	N18
364PLP-***-***	N18
364PLP-***-***	N18

P

* Represents an insignificant digit for model to page referencing.

Parker Hannifin Corporation
Pneumatic Division
Richland, Michigan
www.parker.com/pneumatics

Model No.	Section / Page No.
364PLP-4-5/32	N18
364PLP-5/32	N18
364PLP-5/32-4	N18
365PLP-*	N17
365PLP-**	N17
365PLP-*-*	N17
365PLP-***	N17
365PLP-**-**	N18
365PLP-**-***	N18
365PLP-***-***	N18
365PLP-5/32	N17
365PLP-5/32-4	N17
365PLPBH-*	N19
365PLPBH-**	N19
365PLPBH-***	N19
365PLPBH-5/32	N19
368PLP-**-**	N15
368PLP-***-**	N15
368PLPD-**-**	N16
369PLP-*-*	N11
369PLP-**-**	N11
369PLP-**-***	N11
369PLP-5/32-0	N11
369PLPSP-*	N20
369PLPSP-**	N20
369PLPSP-*-*	N20
369PLPSP-***	N20
369PLPSP-**-**	N20
369PLPSP-**-***	N20
369PLPSP-***-***	N20
369PLPSP-5/32	N20
369PLPSP-5/32-4	N20
369PLPX-*-*	N12
369PLPX-**-**	N12
369PLPX-***-**	N12
369PLPX-5/32-*	N12
369PLPXSP-**	N21
369PLPXSP-**	N21
369PLPXSP-***	N21
369PLPXSP-***	N21
369PLPXSP-*** -***	N21
369PLPXSP-**-**	N21
369PLPXSP-**-***	N21
369PLPXSP-**-***	N21
369PLPXSP-***-***	N21
37G82-*-*	M6
37G82-8-10	M6
37G82-12-12	M6
370PLP-*-*	N16
370PLP-**-**	N16
370PLP-***-**	N16
370PLP-5/32-*	N16
371PLP*-*	N14
371PLP-**-**	N14
371PLP-***-**	N14
371PLP-5/32-0	N14
371PLPSP-*	N21
371PLPSP-**	N22
371PLPSP-***	N22
371PLPSP-**-**	N22
371PLPSP-**-***	N22
371PLPSP-5/32	N21
372PLP-*-*	N13
372PLP-**-**	N13
372PLP-***-**	N13
372PLP-5/32-0	N13
372PLPSP-*	N21
372PLPSP-**	N21
372PLPSP-***	N21
372PLPSP-**-**	N21
372PLPSP-**-***	N21
372PLPSP-***-***	N21
372PLPSP-5/32	N21
377PLP-*-*	N13
377PLP-5/32-*	N13
379PLP-*-*	N12
379PLP-**-**	N12
379PLP-***-**	N12
379PLPSP-*	N21
379PLPSP-**	N21
379PLPSP-***	N21
379PLPSP-5/32	N21
38282-*-*B	M6
38K	L8
38KW	L8
38KY	L8
41618P	C45
41619P	C45
51R125R*	E10
51R126R*	E10
52R*25R*	E12
52R*26R*	E12
53R*25R*	E14
53R*26R*	E14
54R*25R*	E16
54R*26R*	E16
606Y72	C129, C131
616A28-SS	D7, D11, D15, D19, D21
616Y28-SS	D5, D9, D13, D17, D21
62PLP-*	N29
62PLP-*-*	N29
62PLP-4-5/32	N29
62PLP-5/32	N29
62PLP-5/32-2	N29
62PLPBH-*	N29
62PLPBH-5/32	N29
62PW-*	N36
62PWBH-*	N36
639PLP-*	N23
639PLP-**	N24
639PLP-***	N24
639PLP-5/32	N23
63PLP10M	N22
63PLP-4	N22
63PLP-5/32	N22
63PLP8M	N22
66PLP-*-*	N30
66PLP-5/32-*	N30
66PLPBH-*-*	N29
66PLPBH-5/32-4	N29
66PW-*-*	N36
66PWBH-*-*	N36
67PLP-*-*	N23
67PLP-**-**	N23
67PLP-***-**	N23
67PLP-***-***	N23
67PLP-2-5/32	N23
67PLP-5/32-*	N23
68PLCK-**-**	H19
68PLCK-4M-**	H19
68PLCKI-**-**	H19
68PLCKI-***-**	H19
8PLP-*-*	N30
68PLP-5/32-0	N30
68PLP-5/32-4LT*	N30
68PLPR-*-*	N31
68PLPR-5/32-*	N31
68PLPSP-**-**	N15
68PLPSP-***-**	N15
68PLPSP-5/32-0	N15
801-*	M2
801-1*	M2
9920-01*X1P	C45
A4VC4-MG	H19
A5VC5-MG	H19
A6VC6-MG	H19
A*C	L10
A8CP	L10
AS-*	J5
AS-**	J5
ASN-*	J5
ASN-**	J5
B20-*B	L6
B20-*BP	L6
B22	L5
B22*	L5
B23	L5
B23*	L5
B3*	L8
B3**	L8
B3*-*B	L8
B3*-*BP	L8
B50-0*BP	L9
B5*	L9
B5*E	L9
BG441-NBL	J19
BK603B	C21, C23, C25, C43, C129, C131
BK603C	C43
BK605WB	C21, C23, C25
BK606X30B	C129, C131
BK609WB	C129, C131
BP02R113FA	C53
C10A1304	C75, C105
C10A1308	C75, C105
C10A1317	C75, C105
C11A33	C19, C41, C105, C127
C628-**FRLWJCW	C155
C64PB**-1/2	N33
C64PB**-1/4	N33

* Represents an insignificant digit for model to page referencing.

P

Parker Hannifin Corporation
Pneumatic Division
Richland, Michigan
www.parker.com/pneumatics

Model No.	Section / Page No.
C64PB**-3/8	N33
C64PB*-1/4	N33
C64PB*-1/8	N33
C64PB*-3/8	N33
C64SPB**-1/4	N34
C64SPB**-3/8	N34
C64SPB*-1/4	N34
C64SPB*-3/8	N34
C64SPB*4-1/8	N34
C64SPB12-1/2	N34
C68PB*M5	N34
C68SPB*M5	N34
C6PB**-1/4	N33
C6PB*-3/8	N33
CKR10YSS	D15, D19
CKR11YSS	D15, D19
CKR354YSS	D13, D17
CKR364YSS	D13, D17
DB-*	N36
DP276-P	C43
DTK606	C129, C131
E-108-0100	N2
E-43-****	N2
E-43-B-****	N2
E-43-G-****	N2
E-43-O-****	N2
E-43-P****	N2
E-43-R-****	N2
E-43-Y-****	N2
E-53-****	N2
E-64-****	N2
E-64-*-0500	N2
E-86-0100	N2
EB-108-0100	N3
EB-43-****	N2
EB-64-****	N2
EB-86-0100	N2
EPB*	N32
EPB1*	N32
ECS**	J7
EK504VY	D5, D17
EK504Y	D5, D17
EK55J	D7
EK55G	D7

Model No.	Section / Page No.
EK602B	C23, C25
EK602VB	C23
EKF10Y	D19
EKF10VY	D19
EKF501H	D9
EKF71	D11
EM**	J3
EM***	J3
ES**MB	C157, C159
ES**MC	J4
ES***MC	J4
ESB**MC	J4
ESB***MC	J4
EZ******	G4, G5, G6
F28PB*M*	N31
F4PB**-1/2	N31
F4PB**-1/4	N31
F4PB**-3/8	N31
F4PB*-1/4	N31
F4PB*-1/8	N31
F4PB8-3/8	N31
F442	B47, B49, B51
F442001	C108, C116
F442002	C108, C111, C113, C115, C116, C121, C123, C125, C127, C129, C131, C133
F442003	C108, C111, C113, C115, C116, C121, C123, C125, C127, C129, C131, C133
F442005	C108, C111, C113, C115, C116, C121, C123, C125, C127, C129, C131, C133
F602-06*J	C20
F602-06*JR	C20
F602-08*J	C20
F602-08*JR	C20
F602-10**	C22
F602-12**	C22
F602-16**	C24
F602-20**	C24
F701-0***P	C42
F701-C3-077*	C43
F701-C7-077*	C43
F8PB*M**	N31
F8PB*M5	N31
FC601-*-*	H23

Model No.	Section / Page No.
FC601-*-*	H23
FC601-**-**	H23
FC601-***-**	H23
FC602-*	H23
FC608-**-**	H23
FC701-**-**	H17
FC701-***-**	H17
FC702-**	H17
FC705-*-*	H17
FC708-2	H17
FC708-4	H17
FC708-6	H17
FC708-8	H17
FC731-**-**	H4
FC731-***-**	H4
FC832-*	H13
FC832-**	H13
FC832-***	H13
FC836-*	H13
FC836-**	H14
FCB832-*	H13
FCB832-**	H13
FCC731-*-*	H4
FCCB731-*-*	H5
FCCB731-**-**	H5
FCCS731-*-*	H9
FCCS731-**-**	H9
FCCS731-***-**	H9
FCCSP731-**	H11
FCCSP731-***	H11
FCKC731-*-*	H5
FCKC731-*-*	H5
FCKC731-**-**	H5
FCKC731-**-**	H5
FCKC731-***-**	H5
FCKC731-5/32-*	H5
FCKCB731 -**-**	H5
FCM731-*-*	H7
FCM731-**-**	H7
FCM731-5/32-*	H7
FCMB731-**-**	H7
FCMK731-*-*	H7
FCMK731-5/32-*	H7
FCMS731-**-**	H9
FCMS731-4M-2G	H9

Model No.	Section / Page No.
FCMS731-5/32-*	H9
FCMSP701-**	H11
FCMSP731-*	H11
FCMSP731-5/32	H11
FCPM832-***	H13
FCPM832-***	H13
FCPM832-12M	H13
FNPB*	N36
FNPB**	N36
FPB**-3/8	N31
FPB10-1/4	N31
FPB6-1/4	N31
FPB6-1/8	N31
FRPE2.5-0500	N3
FRPE4-****	N3
FRPE6-****	N3
FRPE8-0250	N3
G4PB*-1/4	N30
G4PB*-1/8	N30
GRP-95-111	C59
GRP-95-260-80	E11, E13
GRP-95-261-80	E15
GRP-95-262-80	E17
GRP-96-717	C59
GRP-96-718	C59
GRP-96-725	C59
GRP-96-726	C59
H*C	L2, L3
H*C-*	L2, L3
H*CP	L3
H*E	L2, L3
H*E-*	L2, L3
H*EP	L3
H*F	L2, L3
H*F-*	L2, L3
H*FP	L3
H*G	L2, L3
H*G-*	L2, L3
HPB*	N29
HPB*	N37
HPB**	N29
HPB**	N37
JPB*	N32
JPB1*	N32
K3524**B	F27

P

* Represents an insignificant digit for model to page referencing.

Parker Hannifin Corporation
Pneumatic Division
Richland, Michigan
www.parker.com/pneumatics

Model No.	Section / Page No.
K4511SCR04B	B29, B41, B78
K4511SCR060	B29, B41, B78
K4511SCR11B	B29, B41, B78
K4511SCR150	B29, B41, B78
K4513N18060	B29, B34, B78
K4513N18160	B29, B34, B78
K4515N14030	C69, C81, C99, E7, E9
K4515N14060	C69, C81, C99, E7, E9
K4515N14160	C69, C81, C99, E7, E9
K4515N14160SS	D13, D17
K4515N14300	C69, C81, E7, E9
K4515N18030	B29, B78, C55, C57, C67, C95, C99
K4515N18060	B29, B78, C55, C57, C59, C67, C95, C99
K4515N18160	B29, B78, C53, C55, C57, C59, C67, C95, C99
K4520N14030	B35, B37, B39, B43, B45, B78
K4520N14060	B35, B37, B39, B43,B45, B78, C53, C55, C67, C69, C71, C73, C75, C77, C79, C81, C83, C85, C87, C89, C91, C101, C103, C105, C107, E7, E9
K4520N14160	B35, B37, B39, B43, B45, B78, C53, C55, C67, C69, C71, C73, C75, C77, C79, C81, C83, C85, C87, C89, C91, C101, C103, C105, C107, E7, E9
K4520N14160SS	D15, D19
K4520N14300	B35, B37, B39, B43, B45, B78, C69, C71, C73, C75, C77, C79, C81, C83, C85, C87, C89, C91, C101, C103, C105, C107, E7, E9
L01369	C55, C67
L606-0**	C128
L606-1**	C130
L606C14	C127, C131
L606G0**	C128
L606G1**	C129
LV****	G2, G3, G6
MPS-ACCH7	E37
MPS-32	C69, C71, C73, C75, C79, C81, C83, C85, C87, C99, C101, C105, C107, E7, E9
MV200-*	K4
MV608-*	K4
MV609-*	K4
NB-2-***	N4
NB-2.5-025	N4
NB-3-***	N4
NB-4-***	N4
NB-5-***	N4
NB-6-***	N4
NB-8-***	N4
NBR-2-***	N5
NBR-3-***	N5
NBR-4-***	N5
NBR-5-***	N5
NBR-6-***	N5
NBR-8-***	N5
NN-2-***	N4
NN-2.5-025	N4
NN-3-***	N4
NN-4-***	N4
NN-5-***	N4
NN-6-***	N4
NN-8-***	N4
NNR-2-***	N5
NNR-3-***	N5
NNR-4-***	N5
NNR-5-***	N5
NNR-6-***	N5
NNR-8-***	N5
N164 ****	J11
P01173	C55, C57, C67, C95
P01174	C55, C57, C67, C95
P01175	C55, C57, C67, C95
P01176	C55, C57, C67, C95
P01265	C55, C95
P01531	C55, C67
P01698	C71, C73, C99, C103, C107
P01908	C141, C143, C147, J14
P01909	C141, C143, C147, J13
P02934	C69, C97, E9
P04062	C71, C73, C101, C103, C107
P04063	C71, C73, C99, C101, C105
P04064	C71, C73, C101, C103, C107
P04069B	C71, C73, C101, C103, C107
P04079B	C71, C73, C83, C85
P04082	C71, C73, C83, C85, C101, C103
P04121	C111, C113, C115, C123, C125, C127
P04159	J15
P04160	J15
P04161	J15
P04420	C69
P0442001	E7, E9
P04425	C69, C99, E7, E9
P04426	C69, C99, E7, E9
P04427	C69, C99, E7, E9
P04428	E7, E9
P11912	C113, C115, C123, C125
P2FCA449	B68
P2FCA453	B68
P2FCB449	B68
P2FCB453	B68
P2FC6449	B68
P2FP23N4*	B68
P31CA92GEBN5LNW	B14
P31CA92GEMN5LNW	B14
P31CB92GEBN5LNW	B14
P31CB92GEMN5LNW	B14
P31DA92PPN	B64
P31DA92SGN***N	B64
P31EA92E**BN5P	B40
P31FA92C**N	B24
P31FA92E**N	B18
P31HA92*NNP	B30
P31KA00BGB	B19, B25, B41, B77
P31KA00BGM	B19, B25, B41, B77
P31KA00BGN	B47, B77
P31KA00BMB	B19, B25, B41, B77
P31KA00BMM	B19, B25, B41, B77
P31KA00CB	B19, B25, B29, B34, B41, B47, B73
P31KA00ES9	B25, B76
P31KA00ESA	B25, B76
P31KA00ESC	B25, B76
P31KA00ESE	B19, B41, B76
P31KA00MM	B34, B41, B76
P31KA00MT	B19, B25, B29, B34, B41, B47, B73
P31KA00MP	B29, B34, B41, B76
P31KA00MR	B29, B34, B41, B73
P31KA00MW	B19, B25, B29, B41, B47, B73
P31KA00PL	B47, B76
P31KA00PG	B47, B76
P31KA00RB	B77
P31KA00RC	B29, B34, B41
P31KA00RH	B29, B31, B41
P31KA00PR	B78
P31KA00PS	B78
P31KA00PT	B78
P31KA02CY	B78
P31KA**CN	B73
P31KA**CP	B73
P31LA92L*NN	B46
P31MA*2022N	B72
P31P	B52, F3
P31PA****2V*1A	B52, F7
P31RA92BN*P	B30
P31SA92**N	B66
P31SA92SGN***N	B66
P31TA92PPN	B62
P31TA92SGN***N	B62
P31VA92LBNN	B71
P31VA*2LSAN	B70
P31VA*2LSBN	B70
P32CA92GEANGLNW	B15
P32CA92GEMNGLNW	B15
P32CA93GEANGLNW	B15
P32CA93GEMNGLNW	B15
P32CA94GEANGLNW	B15
P32CA94GEMNGLNW	B15
P32CB92GEANGLNW	B15
P32CB92GEMNGLNW	B15
P32CB93GEANGLNW	B15
P32CB93GEMNGLNW	B15
P32CB94GEANGLNW	B15

* Represents an insignificant digit for model to page referencing.

P

Parker Hannifin Corporation
Pneumatic Division
Richland, Michigan
www.parker.com/pneumatics

Model No.	Section / Page No.
P32CB94GEMNGLNW	B15
P32DA92PPN	B64
P32DA94SCNA**N	B64
P32EA9*E**BNGP	B42
P32FA9*E**N	B20
P32FA9*D**N	B26
P32HA9**NNP	B37
P32KA00BGA	B77
P32KA00BGM	B21, B27, B43, B77
P32KA00BGN	B49, B77
P32KA00BMA	B77
P32KA00BMM	B77
P32KA00BSA	B77
P32KA00BSM	B21, B27, B43, B77
P32KA00CB	B21, B23, D21, B27, B35, B37, B43, B45, B49, B51, B74, B75
P32KA00DA	B21, B23, B27, B29, B43, B76
P32KA00DM	B21, B23, D21, B27, B29, B76
P32KA00ES9	B27, B76
P32KA00ESA	B27, B76
P32KA00ESC	B27, B76
P32KA00ESE	B21, B43, B76
P32KA00MB	B21, B23, B27, B29, B35, B37, B43, B45, B49, B51, B74, B75
P32KA00ML	B21, B27, B29, B49, B74, B75
P32KA00MM	B35, B37, B43, B76
P32KA00MP	B35, B37, B43, B76
P32KA00MR	B35, B37, B43, B74, B75
P32KA00MT	B21, B23, B27, B29, B35, B37, B43, B45, B49, B51, B74, B75
P32KA00PG	B49, B51
P32KA00PL	B49, B76
P32KA00PR	B78
P32KA00PS	B78
P32KA00PT	B78
P31KA00PV	B78
P32KA00RB	B77
P32KA00RC	B35, B37, B43
P32KA00RH	B35, B37, B43
P32KA02CY	B78
P32KA**CP	B74, B75
P32LA9*L*NN	B48
P32P	B52, F3
P32PA****2V*1A	B52, F7
P32RA9*BN*P	B34
P32SA94**N	B66
P32SA94SCNA**N	B66
P32TA94PPN	B62
P32TA94SCNA**N	B62
P32VA**LBNN	B71
P32VA**LSAN	B70
P32VA**LSBN	B70
P33CA94GEANGLNW	B16
P33CA94GEMNGLNW	B16
P33CA96GEANGLNW	B16
P33CA96GEMNGLNW	B16
P33CB94GEANGLNW	B16
P33CB94GEMNGLNW	B16
P33CB96GEANGLNW	B16
P33CB96GEMNGLNW	B16
P33EA9*E**BNGP	B44
P33FA9*E**N	B22
P33FA9*D**N	B28
P33KA00BGA	B77
P33KA00BGM	B23, B29, B45, B77
P33KA00BGN	B49, B77
P33KA00BMA	B77
P33KA00BMM	B77
P33KA00BSA	B77
P33KA00BSM	B23, B29, B45, B51
P33KA00CB	B39
P33KA00DA	B45
P33KA00ES9	B29, B76
P33KA00ESA	B29, B76
P33KA00ESC	B29, B76
P33KA00ESE	B23, B45, B76
P33KA00MB	B39
P33KA00ML	B23, B29, B51
P33KA00MM	B39, B45, B76
P33KA00MP	B39, B45, B76
P33KA00MR	B39, B45
P33KA00MT	B39
P33KA00PL	B51, B76
P33KA00PR	B78
P33KA00PS	B78
P33KA00PT	B78
P33KA00PV	B78
P33KA00RB	B77
P33KA00RC	B39, B45
P33KA00RH	B39, B45
P33LA9*L*NN	B50
P33MA*6024N	B72
P33RA9*BN*P	B38
P33VA**LBNN	B71
P33VA**LSAN	B70
P33VA**LSBN	B70
P3A-RN9*YGN	C56
P3A-RN9*YNN	C56
P3BA208*2*	E28
P3BA45**A*	E30
P3EA632*2**	E26
P3HKA00MC	F7, B63, B65, B67
P3HKA00ML	F7, B63, B65, B67
P3KKA00MC	F7, B63, B65, B67
P3KKA00ML	F7, B63, B65, B67
P3N3A9*SGMNNLNA	C148
P3N3B9*SGMNNLNA	C148
P3NCA9*SGMNNLNA	C150
P3NCB9*SGMNNLNA	C150
P3NEA9*GSABNN	C102
P3NEA9*GSMBNN	C102
P3NFA96DSA	C40
P3NFA96DSM	C40
P3NFA96GSA	C18
P3NFA96GSM	C18
P3NFA98DSA	C40
P3NFA98DSM	C40
P3NFA98GSA	C18
P3NFA98GSM	C18
P3NFA9PDSA	C40
P3NFA9PDSM	C40
P3NFA9PGSA	C18
P3NFA9PGSM	C18
P3NKA00BSA	C19, C41, C105
P3NKA00BSM	C19, C41, C105, C127
P3NKA00BSN	C127
P3NKA00BSP	C19, C41, C105
P3NKA00ES9	C41
P3NKA00ESA	C19, C105
P3NKA00ESCB	C41
P3NKA00ESE	C19, C105
P3NKA00ESG	C19, C103
P3NKA00MW	C19, C41, C75, C87, C105, C127, C151, C153, C154, C164
P3NKA00PD	C87
P3NKA00PE	C19, C41, C105, C127
P3NKA00PK	C127
P3NKA00PL	C127
P3NKA00PM	C154
P3NKA00PN	C75, C105
P3NKA00RL	C127
P3NKA00RN	C75, C105
P3NKA00RR	C75, C105
P3NKB**CL	C153, C154
P3NKB**CP	C154
P3NKB*BCL	C153, C154
P3NKB*BCP	C154
P3NLA96LSN	C126
P3NLA98LSN	C126
P3NLA9PLSN	C126
P3NRA96BNG	C74
P3NRA96BNN	C74
P3NRA96BPG	C86
P3NRA96BPP	C86
P3NRA98BNG	C74
P3NRA98BNN	C74
P3NRA98BPG	C86
P3NRA98BPP	C86
P3NRA9PBNG	C74
P3NRA9PBNN	C74
P3NRA9PBPG	C86
P3NRA9PBPP	C86
P3RA102*2*	E20
P3RA102*2BP*	E22
P3RA17132NNKN	E24
P3RA302*2*	E18
P3TF***W*AN	C46
P3TKA00MW*	C49

* Represents an insignificant digit for model to page referencing.

P

Parker Hannifin Corporation
Pneumatic Division
Richland, Michigan
www.parker.com/pneumatics

Model No.	Section / Page No.
P6M-PA**	J6
P78652	C55, C57, C67, C95
P8L-MC04*2A-M12	F7
PAR-15	F19
PB11-04WJCSS	D18
PB11-04WJCRSS	D18
PB11G04WJCSS	D18
PB11G04WJCRSS	D18
PB12-04WJCSS	D18
PB12-04WJCRSS	D18
PB12G04WJCSS	D18
PB12G04WJCRSS	D18
PB548-02DHCSS	D16
PB548G02DHCSS	D16
PB558-02DHCSS	D16
PB558G02DHCSS	D16
PCKR364*	C65
PF10-04WJSS	D6
PF-04WJRSS	D6
PF10G04WJSS	D6
PF10G04WJRSS	D6
PF11-04WJSS	D10
PF11-04WJRSS	D10
PF11G04WJSS	D10
PF11G04WJRSS	D10
PF501-02DHSS	D8
PF501G02DHSS	D8
PF504-02DHSS	D4
PF504G02DHSS	D4
PHRKS105	C161
PHRKS75	C161
PHRKSC105	C159
PHRKSC75	C159
PHRKSS105	C163
PHRKSS75	C163
PL10-04*SS	D20
PL10G04*SS	D20
PR10-04CSS	D14
PR10G04CSS	D14
PR11-04CSS	D14
PR11G04CSS	D14
PR354-02CSS	D12
PR354G02CSS	D12
PR364-02CSS	D12
PR364G02CSS	D12
PRKR16*Y	C65
PSBJ731-*	H29
PSBJ731-**	H29
PSPE701-**	H29
PSBJ708-**	H29
PSPJ731-*	H29
PSY10328	C49
PS09921	E21, E23, E25, E29
PS12125-1	E21
PS12125-4	E21
PS12127-1	E23
PS12163	E19
PS12165	E21, E23, E27
PS16116-13	E19
PS16116-14	E19
PS19513-11	E29
PS19513-11I	E29
PS19513-12	E29
PS19513-13	E29
PS19549-*	E31
PS19549-1E	E31
PS19549-20E	E31
PS19968-NR	E27
PS2028BP	B69, C159, C161
PS2028JBP	B69, C159, C161
PS203279BP	B69, C159, C161
PS2032J79BP	B69, C159, C161
PS203283BP	B69, C159, C161
PS2032J83BP	B69, C159, C161
PS20966-9	E25
PS20967-1	E25
PS2429JBP	C159, C161
PS2429BP	C159, C161, B69
PS2429JBP	F57
PS243079BP	B69, C159, C161
PS2430J79BP	B69, C159, C161
PS243083BP	B69, C159, C161
PS2430J83BP	B69, C159, C161
PS2932BP	B69
PS2932P	C157, F27
PS2932JP	B69, F27
PS2932JBP	C35, C37, C39, F57
PS294675P	F27
PS294679P	C157, F27
PS294679BP	B69
PS294683P	C157, F27
PS294683BP	B69
PS2946J75P	F27
PS2946J79P	C157, F27
PS2946J79BP	B69
PS2946J83P	C157, F27
PS2946J83BP	B69
PS2982B**P	B68, F26
PS3202B**P	F26
PS401P	C11, C95
PS403P	C11, C95
PS404P	C11, C33, C95
PS407P	C11
PS408BP	C11, C33, C95
PS417BP	C11, C33, C55, C57, C67, C95, C137, C164, E19
PS419	C121, C137, C164
PS420P	C121
PS421P	C121
PS422P	C67
PS423P	C67
PS424BP	C67
PS426P	C55, C57, C95
PS428P	C55, C57, C95
PS436	C9
PS446P	C33
PS447BP	C11, C33, C95, C121
PS451BP	C11, C33, C95
PS452P	C11, C95
PS456P	C33
PS505CP	C113, C115, C123, C125, C134
PS506P	C15, C17, C19, C37, C39, C41, C45, C101, C103, C105, C107
PS511P	C13, C15, C17, C35, C37, C39, C41, C99, C101, C103, C105, E9
PS512P	C13, C15, C17, C19, C35, C37, C39, C41, C99, C101, C103, C105, C107, C111, C113, C115, C123, C125, C127, E9
PS513P	C13, C15, C17, C35, C37, C39, C41, C99, C101, C103, C105, C107, E9
PS602P	C79
PS740P	C111, C113, C115, C123, C125, C127
PS741P	C123, C125
PS742P	C113, C115
PS743P	C15, C37, C113, C123, C164
PS745P	C83, C85
PS746P	C113, C121
PS747P	C83
PS748P	C113, C115
PS749P	C83
PS750P	C147, C148
PS751P	C147, C148
PS752P	C147, C148
PS754P	C147, C148, C159, C161, C163
PS755P	C147, C149
PS756P	C147, C149
PS757P	C147, C149
PS761P	C147, C148
PS762P	C147, C148
PS764	C35, C37, C39
PS765P	C147, C148
PS766P	C147, C148
PS767P	C147, C148
PS781P	C13, C15, C17, C19, C35, C37, C39, C41
PS794P	C1019
PS799P	C147, C148
PS801P	C17, C103
PS802P	C17, C103
PS805P	C17, C39, C103, C115, C125
PS807P	C73, C85, C103, C107, C145, C164
PS808P	C73
PS808RP	C73
PS809P	C73
PS810P	C103
PS811P	C103
PS813P	C85, C103
PS817P	C115, C125
PS819P	C115, C125
PS820P	C115, C125

* Represents an insignificant digit for model to page referencing.

P

Parker Hannifin Corporation
Pneumatic Division
Richland, Michigan
www.parker.com/pneumatics

Model No.	Section / Page No.
PS603P	C79
PS604P	C79
PS605P	C79
PS607P	C133
PS610P	C133
PS612P	C133
PS613P	C133
PS618P	C27
PS619P	C27
PS620P	C27
PS625P	C27
PS626P	C79
PS627	C79
PS701P	C15, C101
PS702P	C15, C101
PS705P	C15, C101, C113, C123
PS707P	C71, C83, C101, C145, C165
PS708P	C71
PS708RP	C71
PS709P	C71
PS710P	C101
PS711P	C101
PS713P	C83, C101
PS715P	C71, C73, C101, C103, C107
PS716P	C113, C115, C123, C125
PS717P	C113, C123
PS718P	C123, C125
PS719P	C113, C123
PS720P	C113, C123
PS722P	C15, C37, C101
PS723P	C15, C37, C101
PS724P	C37
PS726P	C15, C37, C101
PS728P	C113, C123
PS729P	C113, C123
PS730P	C37
PS731P	C15, C101
PS732P	C15, C37, C101
PS734P	C15, C37, C101
PS735P	C15, C37, C101
PS737P	C71, C73, C101, C103, C107
PS738P	C123, C125
PS739P	C113, C115
PS740N	C113, C115, C123, C125, C127, D21
PS740P	C111, C113, C115, C123, C125, C127
PS741P	C123, C125
PS742P	C113, C115
PS743P	C15, C37, C113, C123, C164
PS745P	C83, C85
PS746P	C113, C121
PS747P	C83
PS748P	C113, C115
PS749P	C83
PS750P	C147, C148
PS751P	C147, C148
PS752P	C147, C148
PS754P	C147, C148, C159, C161, C163
PS755P	C147, C149
PS756P	C147, C149
PS757P	C147, C149
PS761P	C147, C148
PS762P	C147, C148
PS764	C35, C37, C39
PS765P	C147, C148
PS766P	C147, C148
PS767P	C147, C148
PS781P	C13, C15, C17, C19, C35, C37, C39, C41
PS794P	C1019
PS797P	C111, C113, C115, C123, C125
PS799P	C147, C148
PS801P	C17, C103
PS802P	C17, C103
PS805P	C17, C39, C103, C115, C125
PS807P	C73, C85, C103, C107, C145, C164
PS808P	C73
PS808RP	C73
PS809P	C73
PS810P	C103
PS811P	C103
PS813P	C85, C103
PS817P	C115, C125
PS819P	C115, C125
PS820P	C115, C125
PS822P	C17, C39, C103
PS823P	C17, C39, C103
PS824P	C39
PS825P	C107
PS826P	C17, C39, C103, C107
PS828P	C115, C125
PS829P	C115, C125
PS830P	C39, C39
PS831P	C17, C103
PS832P	C17, C39, C103
PS834P	C17, C39, C103, C107
PS835P	C17, C39, C103
PS843P	C17, C39, C39, C115, C125, C164
PS846P	C115, C125
PS847P	C85
PS849P	C85
PS850P	C147, C148
PS851P	C147, C148
PS852P	C147, C148
PS853P	C147, C148
PS854P	C148, C159, C161, C163
PS856P	C149
PS857P	C149
PS860P	C147, C148
PS861P	C147, C148
PS862P	C147, C148
PS863P	C147, C148
PS864P	C147, C148
PS865P	C147, C148
PS866P	C147, C148
PS867P	C147, C148
PS884P	C107
PS885P	C107
PS886P	C107
PS894P	C103
PS901P	C13, C99, E9
PS902P	C13, C99, E9
PS905P	C13, C35, C99, C111, E9
PS907P	E7, E9
PS908P	C69, C99
PS909P	C69, C99
PS910P	E7, E9
PS914P	C13, C15, C17, C35, C37, C39, C99, C111, E9
PS915P	C69, C99
PS916P	C111
PS924P	C35
PS929P	C111
PS930P	C35
PS931P	C13, C99, E9
PS932P	C13, C35, C99, E9
PS934P	C13, C35, C99, E9
PS935P	C13, C35, C99, E9
PS943P	C13, C35, C111, C163
PS945P	C81
PS946P	C111
PS94700P	C81
PS948P	C111
PS94900P	C81
PS9500*P	C141, C142
PS9501*P	C141, C142
PS9502*P	C141, C142
PS954P	C141, C142
PS955P	C141, C142
PS95601P	C141, C142
PS95701P	C141, C142
PS963P	C69, C81, C97, C139, C164, E7, E9
PS964P	C69, C81, C99, E7, E9
PS995P	C13, C35, C99, E9
PS996P	C13, C35, C99, E9
PS997P	C13, C35, C99, E9
PS998P	C13, C35, C99, E9
PSBJ708-**	H25
PSBJ731-*	H25
PSBJ731-**	H25
PSPE701-**	H25
PSPJ731-*	H25
PV607-*	K7
PV608-*	K7
PV609-*	K7
R05X51	C63
R05X51-A	C59, C61, C63, C65
R05X51-P	C59, C61, C65, D13, D17
R05X51-SS	D13, D17
R10X51-P	D15, D19

P

* Represents an insignificant digit for model to page referencing.

Parker Hannifin Corporation
Pneumatic Division
Richland, Michigan
www.parker.com/pneumatics

Model No.	Section / Page No.
R10X51-SS	D15, D19
R10Y57-SS	D15, D19
R119-**C	C76
R119-**CG	C76
R119-**J	C88
R119-16J	C90
R119-20J	C90
R24-0*CK	C60
R25-0*C	C60
R342*****	C58
R344*****	C58
R45-0*C	C62
R46-0*CK	C62
R64PB**-1/4	N34
R64PB**-3/8	N34
R64PB*-1/4	N34
R64PB*4-1/8	N34
R64PB12-1/4	N34
R64PB14-1/2	N34
R64PB8-3/8	N34
R68PB*M*	N35
RK118*	C77
RK118X20*	C89
RK119*	C77
RK119G	C91
RK119X20*	C89
RK504SY-SS	D5, D9, D17
RK548YSS	D17
RK549YSS	D17
RK602B	C21
RK602C	C23, C25
RK602D	C21, C23
RK602MD	C21, C23, C25
RK606SY	C129, C131
RK606Y	C129, C31
RK701P	C43
RKB605WB	C21, C23, C25, C129, C131
RKB606X30B	C129, C131
RKL10SS	D21
RKR10YSS	D15, D19
RKR10KYSS	D15, D19
RKR24KY	C61
RKR24Y	C61
RKR25KY	C61
RKR25Y	C61
RKR364YSS	D13
RKR364KYSS	D13
RKR45KY	C63
RKR45Y	C63
RRP-16-024-80	E11, E13, E15, E17
RRP-95-024-80	E17
RRP-95-151-80	E13
RRP-95-152-80	E15
RRP-95-153-80	E17
RRP-95-192-80	E13, E15, E17
RRP-95-585-80	E11, E13, E15, E17
RRP-95-765-80	E11
RRP-95-766-80	E13, E15, E17
RRP-95-905-80	E11, E13, E15, E17
RRP-95-906-80	E11, E13, E15, E17
RRP-95-914-80	E13
RRP-96-934-80	E11, E13
RRP-96-935-80	E15, E17
RV01A1N100*	J8
S64PB**-1/4	N35
S64PB**-3/8	N35
S64PB*-1/4	N35
S64PB*-1/8	N35
S64PB14-1/2	N35
S64PB8-3/8	N35
SA10MDSS	D7, D11, D19
SA161X57	C59, C61, C63, C65
SA200*W57	C21, C43, C129
SA600Y7-1	C21, C23, C25, C43
SA600Y7-1SS	C21, C23, D5, D7, D9, D17, D19, D21
SA602A7	C21, C23, C25
SA602D	C21, C23, C25
SA602MD	C21, C23, C25
SA603D	C21, C23, C25
SA702MD	C43
SAP05481	D5, D7, D9, D17, D19, D21
SPR-375-1	C61
SPR-375-2-SS	D13, D17
SPR376	C61
SPR-376-1-SS	D13, D17
SPR-377	C61
SPR-377-1-SS	D13, D17
SPR-388-1-SS	D15, D19
SPR-389-1-SS	D15, D19
SPR-390-1-SS	D15, D19
SPR-4*	C63
TEPB4-6	N35
U-21-0***	N6
U-42-0***	N6
U-64-0***	N6
U-86-0***	N6
W110 0900	J20
W169PLP-*-*	N33
W169PLP-5/32-*	N33
W169PLPNS-*-*	N33
W169PLPNS5/32-*	N33
W169PW-*-*	N37
W171PLP-*-*	N34
W171PLP-5/32-2	N34
W171PW-*-*	N37
W172PLP-*-*	N35
W172PLP-5/32-2	N35
W172PW-*-*	N37
W2154***LB	F21
W2154****	F22
W368PLP-*-*	N15
W368PLP-5/32-*	N15
W369PLP-*-*	N11
W369PLP-**-*	N11
W369PLP-***-*	N11
W369PLP-5/32-*	N11
W369PLPX-*-*	N12
W371PLP-*-*	N14
W371PLP-5/32-*	N14
W372PLP-*-*	N13
W372PLP-**-*	N13
W372PLP-***-*	N13
W372PLP-5/32-*	N13
W379PLP-*-*	N12
W68PLCK-*-*	H19
W68PLCK-*-*	H19
W68PLCK-5/32-*	H19
W68PLCKI-*-*	H19
W68PLCKI-*-*	H19
W68PLCKI-5/32-*	H19
W68PLP-*-*	N30
W68PLP-5/32-*	N30
W68PLP-5/32-*	N31
W68PLPSP-*-*	N15
W68PLPSP-4-2	N15
W68PLPSP-5/32-*	N15
W68PW-*-*	N36
WBMPB*	N29
WBMPB**	N29
WDV2-425	J17
WDV3-G12BL	J16
WE6PB*	N32
WE6PB*	N32
WG4PB**-3/8	N30
WG4PB*-1/4	N30
WG4PB*-1/8	N30
WG4PB12-1/2	N30
WPB*	N29
WPB**	N29
XV500P-*	K4
XV500P-1*	K4
XV502SS-*	K5
XV502SS-**	K5

* Represents an insignificant digit for model to page referencing.

P

Parker Hannifin Corporation
Pneumatic Division
Richland, Michigan
www.parker.com/pneumatics

Safety Guide For Selecting And Using Pneumatic Division Products And Related Accessories

⚠ WARNING:

FAILURE OR IMPROPER SELECTION OR IMPROPER USE OF PNEUMATIC DIVISION PRODUCTS, ASSEMBLIES OR RELATED ITEMS ("PRODUCTS") CAN CAUSE DEATH, PERSONAL INJURY, AND PROPERTY DAMAGE. POSSIBLE CONSEQUENCES OF FAILURE OR IMPROPER SELECTION OR IMPROPER USE OF THESE PRODUCTS INCLUDE BUT ARE NOT LIMITED TO:

- Unintended or mistimed cycling or motion of machine members or failure to cycle
- Work pieces or component parts being thrown off at high speeds.
- Failure of a device to function properly for example, failure to clamp or unclamp an associated item or device.
- Explosion
- Suddenly moving or falling objects.
- Release of toxic or otherwise injurious liquids or gasses.

Before selecting or using any of these Products, it is important that you read and follow the instructions below.

1. GENERAL INSTRUCTIONS

1.1. Scope: This safety guide is designed to cover general guidelines on the installation, use, and maintenance of Pneumatic Division Valves, FRLs (Filters, Pressure Regulators, and Lubricators), Vacuum products and related accessory components.

1.2. Fail-Safe: Valves, FRLs, Vacuum products and their related components can and do fail without warning for many reasons. Design all systems and equipment in a fail-safe mode, so that failure of associated valves, FRLs or Vacuum products will not endanger persons or property.

1.3 Relevant International Standards: For a good guide to the application of a broad spectrum of pneumatic fluid power devices see: ISO 4414:1998, Pneumatic Fluid Power – General Rules Relating to Systems. See www.iso.org for ordering information.

1.4. Distribution: Provide a copy of this safety guide to each person that is responsible for selection, installation, or use of Valves, FRLs or Vacuum products. Do not select, or use Parker valves, FRLs or vacuum products without thoroughly reading and understanding this safety guide as well as the specific Parker publications for the products considered or selected.

1.5. User Responsibility: Due to the wide variety of operating conditions and applications for valves, FRLs, and vacuum products Parker and its distributors do not represent or warrant that any particular valve, FRL or vacuum product is suitable for any specific end use system. This safety guide does not analyze all technical parameters that must be considered in selecting a product. The user, through its own analysis and testing, is solely responsible for:

- Making the final selection of the appropriate valve, FRL, Vacuum component, or accessory.
- Assuring that all user's performance, endurance, maintenance, safety, and warning requirements are met and that the application presents no health or safety hazards.
- Complying with all existing warning labels and / or providing all appropriate health and safety warnings on the equipment on which the valves, FRLs or Vacuum products are used; and,
- Assuring compliance with all applicable government and industry standards.

1.6. Safety Devices: Safety devices should not be removed, or defeated.

1.7. Warning Labels: Warning labels should not be removed, painted over or otherwise obscured.

1.8. Additional Questions: Call the appropriate Parker technical service department if you have any questions or require any additional information. See the Parker publication for the product being considered or used, or call 1-800-CPARKER, or go to www.parker.com, for telephone numbers of the appropriate technical service department.

2. PRODUCT SELECTION INSTRUCTIONS

2.1. Flow Rate: The flow rate requirements of a system are frequently the primary consideration when designing any pneumatic system. System components need to be able to provide adequate flow and pressure for the desired application.

2.2. Pressure Rating: Never exceed the rated pressure of a product. Consult product labeling, Pneumatic Division catalogs or the instruction sheets supplied for maximum pressure ratings.

2.3. Temperature Rating: Never exceed the temperature rating of a product. Excessive heat can shorten the life expectancy of a product and result in complete product failure.

2.4. Environment: Many environmental conditions can affect the integrity and suitability of a product for a given application. Pneumatic Division products are designed for use in general purpose industrial applications. If these products are to be used in unusual circumstances such as direct sunlight and/or corrosive or caustic environments, such use can shorten the useful life and lead to premature failure of a product.

2.5. Lubrication and Compressor Carryover: Some modern synthetic oils can and will attack nitrile seals. If there is any possibility of synthetic oils or greases migrating into the pneumatic components check for compatibility with the seal materials used. Consult the factory or product literature for materials of construction.

2.6. Polycarbonate Bowls and Sight Glasses: To avoid potential polycarbonate bowl failures:

- Do not locate polycarbonate bowls or sight glasses in areas where they could be subject to direct sunlight, impact blow, or temperatures outside of the rated range.
- Do not expose or clean polycarbonate bowls with detergents, chlorinated hydro-carbons, keytones, esters or certain alcohols.
- Do not use polycarbonate bowls or sight glasses in air systems where compressors are lubricated with fire resistant fluids such as phosphate ester and di-ester lubricants.

Parker Hannifin Corporation
Pneumatic Division
Richland, Michigan
www.parker.com/pneumatics

2.7. Chemical Compatibility: For more information on plastic component chemical compatibility see Pneumatic Division technical bulletins Tec-3, Tec-4, and Tec-5

2.8. Product Rupture: Product rupture can cause death, serious personal injury, and property damage.
- Do not connect pressure regulators or other Pneumatic Division products to bottled gas cylinders.
- Do not exceed the maximum primary pressure rating of any pressure regulator or any system component.
- Consult product labeling or product literature for pressure rating limitations.

3. PRODUCT ASSEMBLY AND INSTALLATION INSTRUCTIONS

3.1. Component Inspection: Prior to assembly or installation a careful examination of the valves, FRLs or vacuum products must be performed. All components must be checked for correct style, size, and catalog number. DO NOT use any component that displays any signs of nonconformance.

3.2. Installation Instructions: Parker published Installation Instructions must be followed for installation of Parker valves, FRLs and vacuum components. These instructions are provided with every Parker valve or FRL sold, or by calling 1-800-CPARKER, or at www.parker.com.

3.3. Air Supply: The air supply or control medium supplied to Valves, FRLs and Vacuum components must be moisture-free if ambient temperature can drop below freezing

4. VALVE AND FRL MAINTENANCE AND REPLACEMENT INSTRUCTIONS

4.1. Maintenance: Even with proper selection and installation, valve, FRL and vacuum products service life may be significantly reduced without a continuing maintenance program. The severity of the application, risk potential from a component failure, and experience with any known failures in the application or in similar applications should determine the frequency of inspections and the servicing or replacement of Pneumatic Division products so that products are replaced before any failure occurs. A maintenance program must be established and followed by the user and, at minimum, must include instructions 4.2 through 4.10.

4.2. Installation and Service Instructions: Before attempting to service or replace any worn or damaged parts consult the appropriate Service Bulletin for the valve or FRL in question for the appropriate practices to service the unit in question. These Service and Installation Instructions are provided with every Parker valve and FRL sold, or are available by calling 1-800-CPARKER, or by accessing the Parker web site at www.parker.com.

4.3. Lockout / Tagout Procedures: Be sure to follow all required lockout and tagout procedures when servicing equipment. For more information see: OSHA Standard – 29 CFR, Part 1910.147, Appendix A, The Control of Hazardous Energy – (Lockout / Tagout)

4.4. Visual Inspection: Any of the following conditions requires immediate system shut down and replacement of worn or damaged components:
- Air leakage: Look and listen to see if there are any signs of visual damage to any of the components in the system. Leakage is an indication of worn or damaged components.
- Damaged or degraded components: Look to see if there are any visible signs of wear or component degradation.
- Kinked, crushed, or damaged hoses. Kinked hoses can result in restricted air flow and lead to unpredictable system behavior.
- Any observed improper system or component function: Immediately shut down the system and correct malfunction.
- Excessive dirt build-up: Dirt and clutter can mask potentially hazardous situations.

Caution: Leak detection solutions should be rinsed off after use.

4.5. Routine Maintenance Issues:
- Remove excessive dirt, grime and clutter from work areas.
- Make sure all required guards and shields are in place.

4.6. Functional Test: Before initiating automatic operation, operate the system manually to make sure all required functions operate properly and safely.

4.7. Service or Replacement Intervals: It is the user's responsibility to establish appropriate service intervals. Valves, FRLs and vacuum products contain components that age, harden, wear, and otherwise deteriorate over time. Environmental conditions can significantly accelerate this process. Valves, FRLs and vacuum components need to be serviced or replaced on routine intervals. Service intervals need to be established based on:
- Previous performance experiences.
- Government and / or industrial standards.
- When failures could result in unacceptable down time, equipment damage or personal injury risk.

4.8. Servicing or Replacing of any Worn or Damaged Parts: To avoid unpredictable system behavior that can cause death, personal injury and property damage:
- Follow all government, state and local safety and servicing practices prior to service including but not limited to all OSHA Lockout Tagout procedures (OSHA Standard – 29 CFR, Part 1910.147, Appendix A, The Control of Hazardous Energy – Lockout / Tagout).
- Disconnect electrical supply (when necessary) before installation, servicing, or conversion.
- Disconnect air supply and depressurize all air lines connected to system and Pneumatic Division products before installation, service, or conversion.
- Installation, servicing, and / or conversion of these products must be performed by knowledgeable personnel who understand how pneumatic products are to be applied.
- After installation, servicing, or conversions air and electrical supplies (when necessary) should be connected and the product tested for proper function and leakage. If audible leakage is present, or if the product does not operate properly, do not put product or system into use.
- Warnings and specifications on the product should not be covered or painted over. If masking is not possible, contact your local representative for replacement labels.

4.9. Putting Serviced System Back into Operation: Follow the guidelines above and all relevant Installation and Maintenance Instructions supplied with the valve FRL or vacuum component to insure proper function of the system.

Parker Hannifin Corporation
Pneumatic Division
Richland, Michigan
www.parker.com/pneumatics

Offer of Sale

The items described in this document and other documents and descriptions provided by Parker Hannifin Corporation, its subsidiaries and its authorized distributors ("Seller") are hereby offered for sale at prices to be established by Seller. This offer and its acceptance by any customer ("Buyer") shall be governed by all of the following Terms and Conditions. Buyer's order for any item described in its document, when communicated to Seller verbally, or in writing, shall constitute acceptance of this offer. All goods or work described will be referred to as "Products".

1. Terms and Conditions. Seller's willingness to offer Products, or accept an order for Products, to or from Buyer is expressly conditioned on Buyer's assent to these Terms and Conditions and to the terms and conditions found on-line at www.parker.com/saleterms/. Seller objects to any contrary or additional term or condition of Buyer's order or any other docum ent issued by Buyer.

2. Price Adjustments; Payments. Prices stated on the reverse side or preceding pages of this document are valid for 30 days. After 30 days, Seller may change prices to reflect any increase in its costs resulting from state, federal or local legislation, price increases from its suppliers, or any change in the rate, charge, or classification of any carrier. The prices stated on the reverse or preceding pages of this document do not include any sales, use, or other taxes unless so stated specifically. Unless otherwise specified by Seller, all prices are F.O.B. Seller's facility, and payment is due 30 days from the date of invoice. After 30 days, Buyer shall pay interest on any unpaid invoices at the rate of 1.5% per month or the maximum allowable rate under applicable law.

3. Delivery Dates; Title and Risk; Shipment. All delivery dates are approximate and Seller shall not be responsible for any damages resulting from any delay. Regardless of the manner of shipment, title to any products and risk of loss or damage shall pass to Buyer upon tender to the carrier at Seller's facility (i.e., when it's on the truck, it's yours). Unless otherwise stated, Seller may exercise its judgment in choosing the carrier and means of delivery. No deferment of shipment at Buyers' request beyond the respective dates indicated will be made except on terms that will indemnify, defend and hold Seller harmless against all loss and additional expense. Buyer shall be responsible for any additional shipping charges incurred by Seller due to Buyer's changes in shipping, product specifications or in accordance with Section 13, herein.

4. Warranty. Seller warrants that the Products sold hereunder shall be free from defects in material or workmanship for a period of twelve months from the date of delivery to Buyer or 2,000 hours of normal use, whichever occurs first. This warranty is made only to Buyer and does not extend to anyone to whom Products are sold after purchased from Seller. The prices charged for Seller's products are based upon the exclusive limited warranty stated above, and upon the following disclaimer: **DISCLAIMER OF WARRANTY: THIS WARRANTY COMPRISES THE SOLE AND ENTIRE WARRANTY PERTAINING TO PRODUCTS PROVIDED HEREUNDER. SELLER DISCLAIMS ALL OTHER WARRANTIES, EXPRESS AND IMPLIED, INCLUDING MERCHANTABILITY AND FITNESS FOR A PARTICULAR PURPOSE.**

5. Claims; Commencement of Actions. Buyer shall promptly inspect all Products upon delivery. No claims for shortages will be allowed unless reported to the Seller within 10 days of delivery. No other claims against Seller will be allowed unless asserted in writing within 60 days after delivery or, in the case of an alleged breach of warranty, within 30 days after the date within the warranty period on which the defect is or should have been discovered by Buyer. Any action based upon breach of this agreement or upon any other claim arising out of this sale (other than an action by Seller for any amount due to Seller from Buyer) must be commenced within thirteen months from the date of tender of delivery by Seller or, for a cause of action based upon an alleged breach of warranty, within thirteen months from the date within the warranty period on which the defect is or should have been discovered by Buyer.

6. LIMITATION OF LIABILITY. UPON NOTIFICATION, SELLER WILL, AT ITS OPTION, REPAIR OR REPLACE A DEFECTIVE PRODUCT, OR REFUND THE PURCHASE PRICE. **IN NO EVENT SHALL SELLER BE LIABLE TO BUYER FOR ANY SPECIAL, INDIRECT, INCIDENTAL OR CONSEQUENTIAL DAMAGES ARISING OUT OF, OR AS THE RESULT OF, THE SALE, DELIVERY, NON-DELIVERY, SERVICING, USE OR LOSS OF USE OF THE PRODUCTS OR ANY PART THEREOF, OR FOR ANY CHARGES OR EXPENSES OF ANY NATURE INCURRED WITHOUT SELLER'S WRITTEN CONSENT, EVEN IF SELLER HAS BEEN NEGLIGENT, WHETHER IN CONTRACT, TORT OR OTHER LEGAL THEORY. IN NO EVENT SHALL SELLER'S LIABILITY UNDER ANY CLAIM MADE BY BUYER EXCEED THE PURCHASE PRICE OF THE PRODUCTS.**

7. Contingencies. Seller shall not be liable for any default or delay in performance if caused by circumstances beyond the reasonable control of Seller.

8. User Responsibility. The user, through its own analysis and testing, is solely responsible for making the final selection of the system and Product and assuring that all performance, endurance, maintenance, safety and warning requirements of the application are met. The user must analyze all aspects of the application and follow applicable industry standards and Product information. If Seller provides Product or system options, the user is responsible for determining that such data and specifications are suitable and sufficient for all applications and reasonably foreseeable uses of the Products or systems.

9. Loss to Buyer's Property. Any designs, tools, patterns, materials, drawings, confidential information or equipment furnished by Buyer or any other items which become Buyer's property, may be considered obsolete and may be destroyed by Seller after two consecutive years have elapsed without Buyer placing an order for the items which are manufactured using such property. Seller shall not be responsible for any loss or damage to such property while it is in Seller's possession or control.

10. Special Tooling. A tooling charge may be imposed for any special tooling, including without limitation, dies, fixtures, molds and patterns, acquired to manufacture Products. Such special tooling shall be and remain Seller's property notwithstanding payment of any charges by Buyer. In no event will Buyer acquire any interest in apparatus belonging to Seller which is utilized in the manufacture of the Products, even if such apparatus has been specially converted or adapted for such manufacture and notwithstanding any charges paid by Buyer. Unless otherwise agreed, Seller shall have the right to alter, discard or otherwise dispose of any special tooling or other property in its sole discretion at any time.

11. Buyer's Obligation; Rights of Seller. To secure payment of all sums due or otherwise, Seller shall retain a security interest in the goods delivered and this agreement shall be deemed a Security Agreement under the Uniform Commercial Code. Buyer authorizes Seller as its attorney to execute and file on Buyer's behalf all documents Seller deems necessary to perfect its security interest. Seller shall have a security interest in, and lien upon, any property of Buyer in Seller's possession as security for the payment of any amounts owed to Seller by Buyer.

12. Improper use and Indemnity. Buyer shall indemnify, defend, and hold Seller harmless from any claim, liability, damages, lawsuits, and costs (including attorney fees), whether for personal injury, property damage, patent, trademark or copyright infringement or any other claim, brought by or incurred by Buyer, Buyer's employees, or any other person, arising out of: (a) improper selection, improper application or other misuse of Products purchased by Buyer from Seller; (b) any act or omission, negligent or otherwise, of Buyer; (c) Seller's use of patterns, plans, drawings, or specifications furnished by Buyer to manufacture Product; or (d) Buyer's failure to comply with these terms and conditions. Seller shall not indemnify Buyer under any circumstance except as otherwise provided.

13. Cancellations and Changes. Orders shall not be subject to cancellation or change by Buyer for any reason, except with Seller's written consent and upon terms that will indemnify, defend and hold Seller harmless against all direct, incidental and consequential loss or damage. Seller may change product features, specifications, designs and availability with notice to Buyer.

14. Limitation on Assignment. Buyer may not assign its rights or obligations under this agreement without the prior written consent of Seller.

15. Entire Agreement. This agreement contains the entire agreement between the Buyer and Seller and constitutes the final, complete and exclusive expression of the terms of the agreement. All prior or contemporaneous written or oral agreements or negotiations with respect to the subject matter are herein merged.

16. Waiver and Severability. Failure to enforce any provision of this agreement will not waive that provision nor will any such failure prejudice Seller's right to enforce that provision in the future. Invalidation of any provision of this agreement by legislation or other rule of law shall not invalidate any other provision herein. The remaining provisions of this agreement will remain in full force and effect.

17. Termination. This agreement may be terminated by Seller for any reason and at any time by giving Buyer thirty (30) days written notice of termination. In addition, Seller may by written notice immediately terminate this agreement for the following: (a) Buyer commits a breach of any provision of this agreement (b) the appointment of a trustee, receiver or custodian for all or any part of Buyer's property (b) the filing of a petition for relief in bankruptcy of the other Party on its own behalf, or by a third party (c) an assignment for the benefit of creditors, or (d) the dissolution or liquidation of the Buyer.

18. Governing Law. This agreement and the sale and delivery of all Products hereunder shall be deemed to have taken place in and shall be governed and construed in accordance with the laws of the State of Ohio, as applicable to contracts executed and wholly performed therein and without regard to conflicts of laws principles. Buyer irrevocably agrees and consents to the exclusive jurisdiction and venue of the courts of Cuyahoga County, Ohio with respect to any dispute, controversy or claim arising out of or relating to this agreement. Disputes between the parties shall not be settled by arbitration unless, after a dispute has arisen, both parties expressly agree in writing to arbitrate the dispute.

19. Indemnity for Infringement of Intellectual Property Rights. Seller shall have no liability for infringement of any patents, trademarks, copyrights, trade dress, trade secrets or similar rights except as provided in this Section. Seller will defend and indemnify Buyer against allegations of infringement of U.S. patents, U.S. trademarks, copyrights, trade dress and trade secrets ("Intellectual Property Rights"). Seller will defend at its expense and will pay the cost of any settlement or damages awarded in an action brought against Buyer based on an allegation that a Product sold pursuant to this Agreement infringes the Intellectual Property Rights of a third party. Seller's obligation to defend and indemnify Buyer is contingent on Buyer notifying Seller within ten (10) days after Buyer becomes aware of such allegations of infringement, and Seller having sole control over the defense of any allegations or actions including all negotiations for settlement or compromise. If a Product is subject to a claim that it infringes the Intellectual Property Rights of a third party, Seller may, at its sole expense and option, procure for Buyer the right to continue using the Product, replace or modify the Product so as to make it noninfringing, or offer to accept return of the Product and return the purchase price less a reasonable allowance for depreciation. Notwithstanding the foregoing, Seller shall have no liability for claims of infringement based on information provided by Buyer, or directed to Products delivered hereunder for which the designs are specified in whole or part by Buyer, or infringements resulting from the modification, combination or use in a system of any Product sold hereunder. The foregoing provisions of this Section shall constitute Seller's sole and exclusive liability and Buyer's sole and exclusive remedy for infringement of Intellectual Property Rights.

20. Taxes. Unless otherwise indicated, all prices and charges are exclusive of excise, sales, use, property, occupational or like taxes which may be imposed by any taxing authority upon the manufacture, sale or delivery of Products.

21. Equal Opportunity Clause. For the performance of government contracts and where dollar value of the Products exceed $10,000, the equal employment opportunity clauses in Executive Order 11246, VEVRAA, and 41 C.F.R. §§ 60-1.4(a), 60-741.5(a), and 60-250.4, are hereby incorporated.

Parker Hannifin Corporation
Pneumatic Division
Richland, Michigan
www.parker.com/pneumatics

Five convenient locations - same great service

Fremont

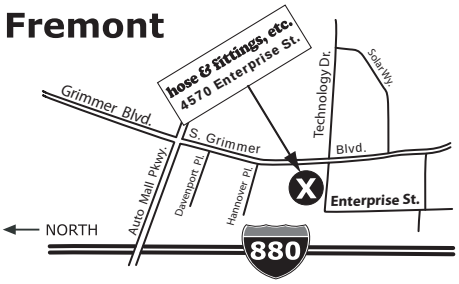

4570 Enterprise St.
Fremont, CA 94538
Phone: 510.661.0151
Hours: 7 a.m. - 5 p.m. (M-F)

QR Code

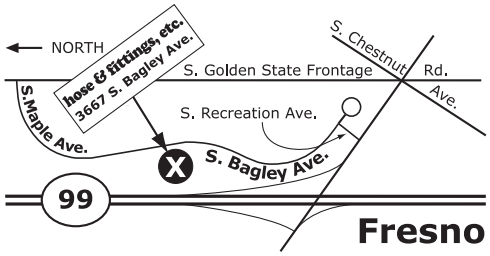

3667 South Bagley Ave., #102
Fresno, CA 93725
Phone: 559.495.1220
Hours: 7 a.m. - 5 p.m. (M-F)

QR Code

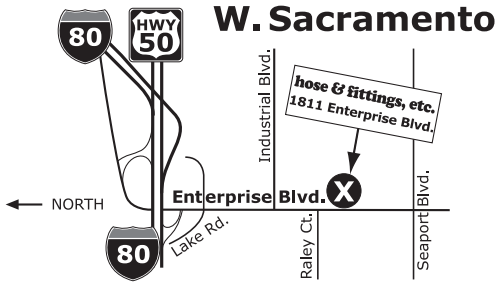

1811 Enterprise Blvd.
West Sacramento, CA 95691
Phone: 916.372.3888
Hours: 7 a.m. - 5 p.m. (M-F)

QR Code

San Leandro

3011 Teagarden St.
San Leandro, CA 94577
Phone: 510.352.1514
Hours: 7 a.m. - 5 p.m. (M-F)

QR Code

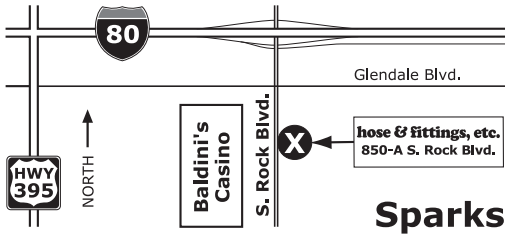

850-A South Rock Blvd.
Sparks, NV 89431
Phone: 775.331.4673
Hours: 7 a.m. - 5 p.m. (M-F)

QR Code

Phone: **888.715.4673**
E-mail: **hfe@hfeweb.com**

hfeweb.com

hose & fittings, etc.
Parker In California & Nevada