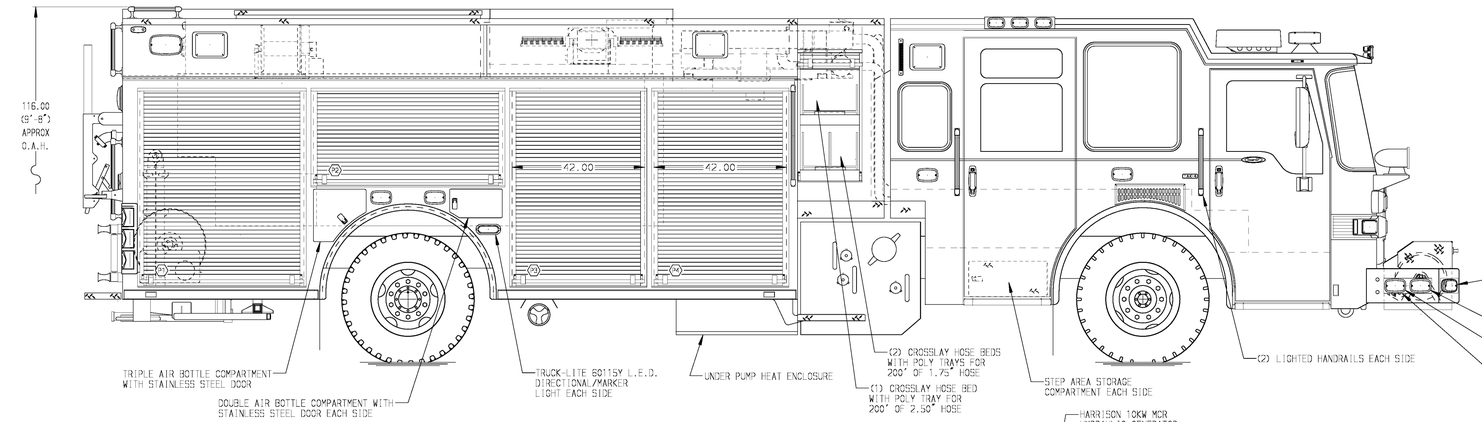

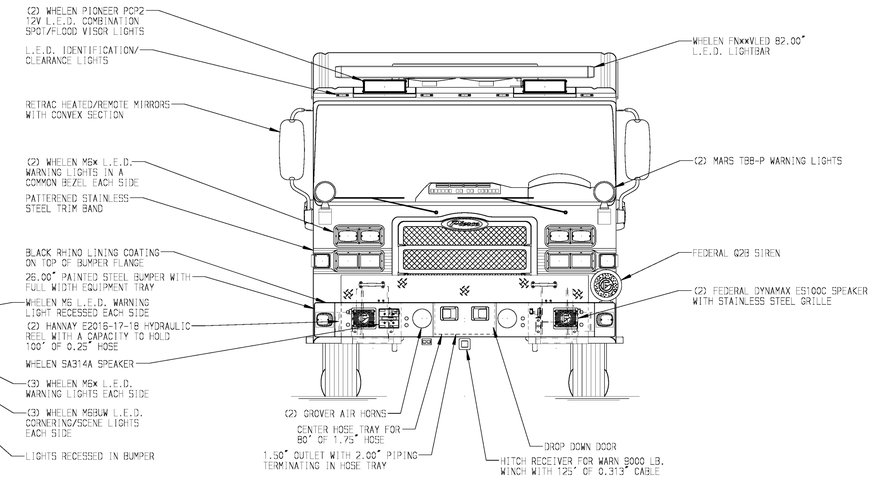

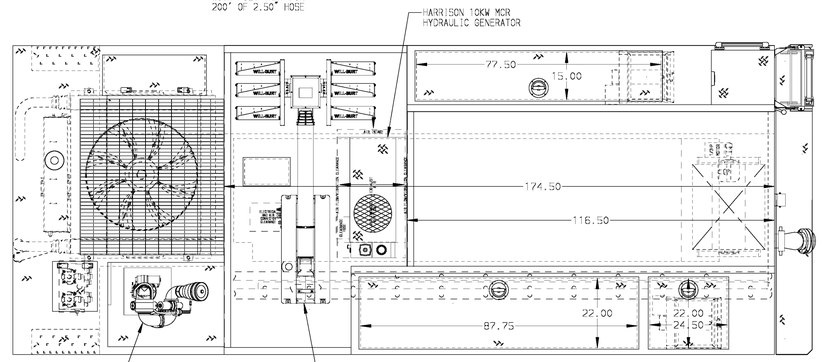

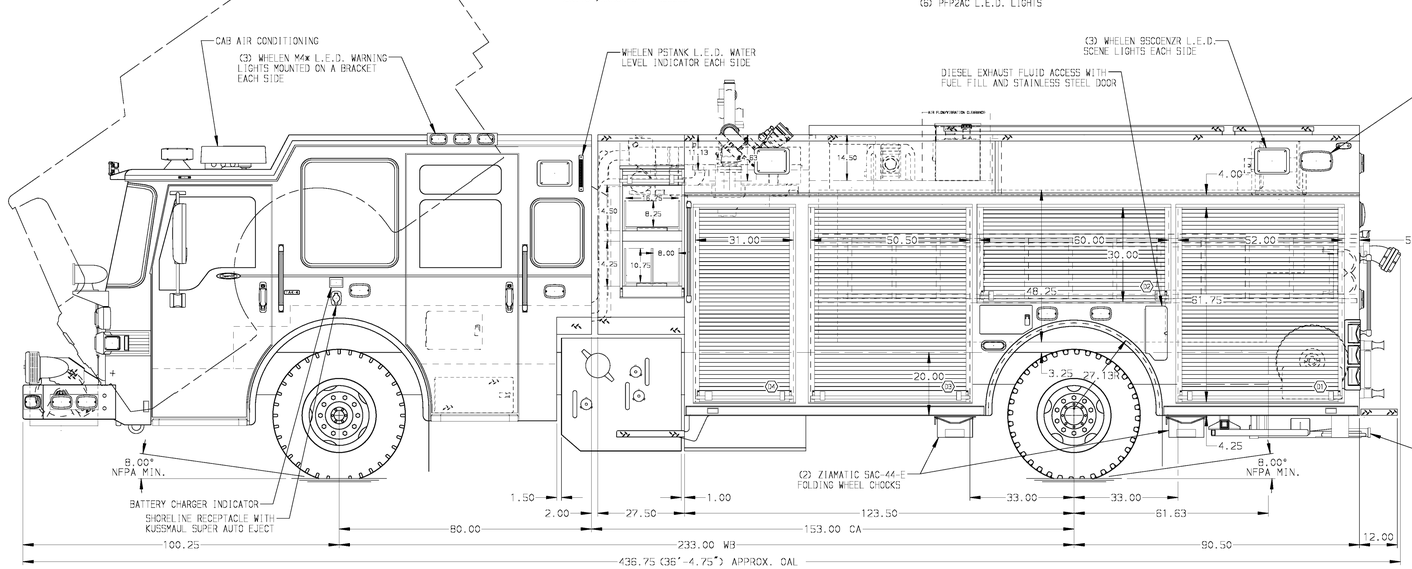

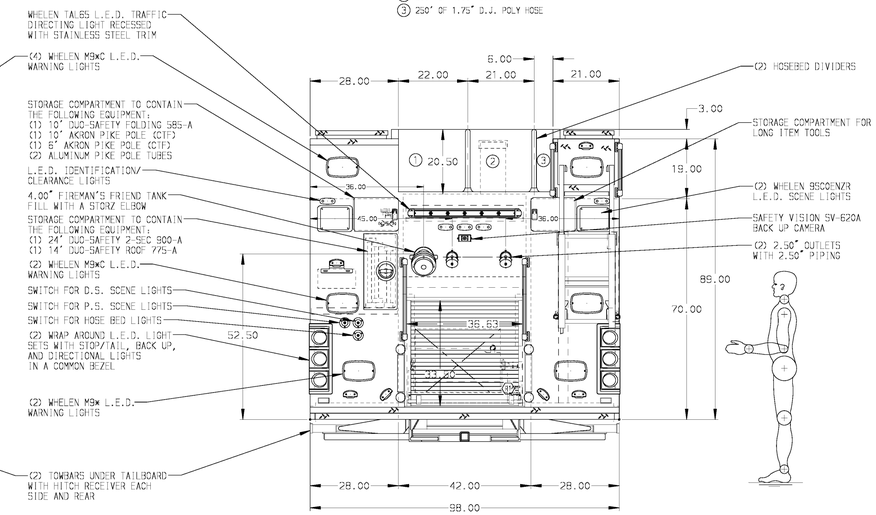

ALUMINUM BODY

MAXIMUM O.A.H. 116.00"

NOTE

DIMENSIONS SHOWN ARE APPROXIMATE AND ARE SUBJECT TO MINOR DEVIATIONS AS MAY OCCUR OR BE NECESSARY IN CONSTRUCTION.
MINOR DETAILS NOT SHOWN.

1. AIR INLET WITH DISCONNECT FITTING LOCATED IN DRIVER SIDE STEP WELL
2. ANTENNA WITH MOUNTING BASE LOCATED PER SHOP ORDER
3. BATTERY CHARGER/COMPRESSOR LOCATED IN DRIVER SIDE HATCH COMPARTMENT
4. PERIMETER SCENE LIGHTS LOCATED PER SHOP ORDER
5. 12V L.E.D. LIGHT STRIP LOCATED ON EACH SIDE IN THE HOSEBED
6. PULL STRAPS FOR DOORS IN COMPARTMENT-D1,D2,D3,D4,P1,P2,P3,P4,CROSSLAY DOORS
7. PIERCE L.E.D. LIGHT STRIPS LOCATED IN ALL SPECIFIED BODY COMPARTMENTS
8. PIERCE L.E.D. LIGHT STRIPS IN EACH HATCH COMPARTMENT
9. 500 LB. FULL WIDTH/DEPTH ADJUSTABLE SHELVES IN COMPARTMENT-TWO IN D1,D3
10. 500 LB. ADJUSTABLE SLIDE-OUT TRAYS WITH 2" SIDES IN COMPARTMENT-D1,D3,P3,P4
11. 215 LB. ADJUSTABLE TILT/SLIDE-OUT TRAYS IN COMPARTMENT-ONE IN P2;TWO IN P3,P4
12. ALUMINUM ADJUSTABLE SLIDE-OUT TOOLBOARDS WITH PEGBOARD PATTERN IN COMP.-TWO IN P1
13. MODEL 13 LITTLE GIANT LADDER IN COMPARTMENT-P1
14. ONE HANNAY EF34-23-24 ELECTRIC REWIND BOOSTER REEL WITH A CAPACITY FOR 200' OF 1.00" HOSE IN COMPARTMENT-R1
15. CIRCUIT BREAKER PANEL IN COMPARTMENT-D3
16. ONE AKRON EBNC-15-10 3-WIRE ELECTRIC REWIND CORD REEL WITH 200' OF 10/3 CABLE IN HATCH COMPARTMENT ABOVE D1,P1
17. ALUMINUM SWING-OUT TOOLBOARDS WITH PEGBOARD PATTERN IN COMPARTMENT-TWO IN D2
18. OIL DRY HOPPER LOCATED IN COMPARTMENT-D3
19. NORCOLD DE-07888 REFRIGERATOR IN COMPARTMENT-P3

REV	DATE	BY	CH
▽	26JAN15	BST	JBO
▽	18DEC14	BST	JBO
	23SEP14	BST	ASI

CHASSIS DATA
MAKE: PIERCE
MODEL: DASH CF

Pierce MANUFACTURING INC.

TITLE: 1500-D-1000P;214" PUC RESCUE BODY;GENERATOR;DELUGE LADDERS ABOVE WATER TANK;(3) CROSSLAYS;LIGHT TOWER
FOR: VIENNA TOWNSHIP FIRE DEPARTMENT
VIENNA, OH
DWG NO.: 28217AD

JOB NO.	28217
SCALE	1:24
DATE	
DRAWN BY	BST 09SEP14
CHECKED BY	GRM 15SEP14
SHEET SIZE	D
SHEET NO.	1 OF 1

View File Created 27-JAN-2015 07:11:31