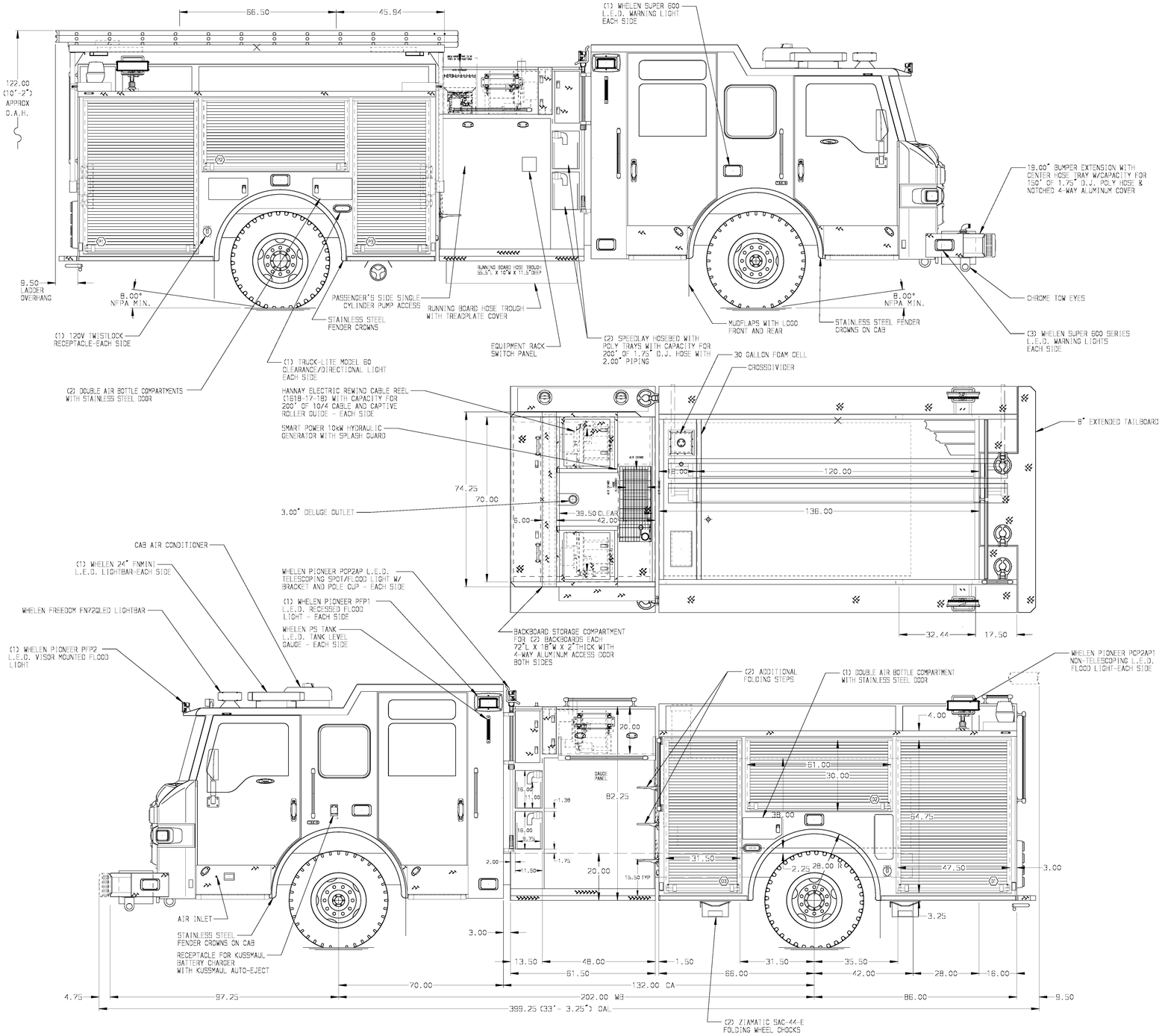

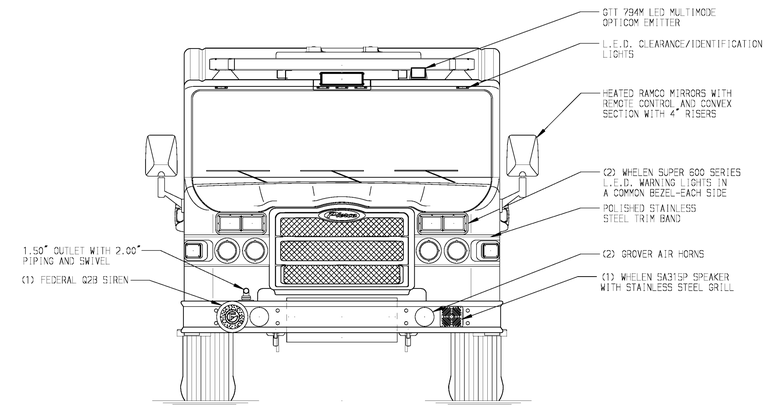

HOSEBED CAPACITIES

1. 200' OF 2.50" D.J. POLY HOSE
2. 1000' OF 4.00" D.J. POLY HOSE
3. 700' OF 2.50" D.J. POLY HOSE

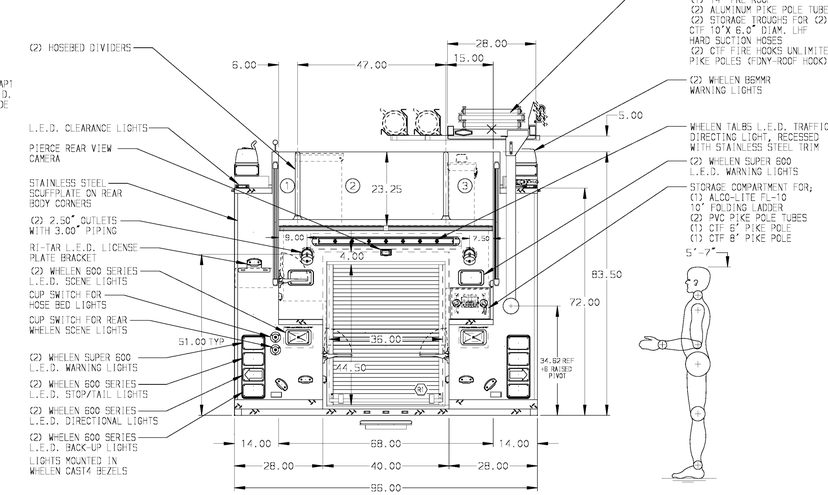

ALUMINUM BODY

NOTE

DIMENSIONS SHOWN ARE APPROXIMATE AND ARE SUBJECT TO MINOR DEVIATIONS AS MAY OCCUR OR BE NECESSARY IN CONSTRUCTION.
MINOR DETAILS NOT SHOWN.

NOTES:

1. AIR INLET WITH DISCONNECT LOCATED ON D.S. STEP WELL
2. AIR OUTLET W/PARATECH AIR FITTING & SHUT-OFF VALVE LOCATED ON D.S. PUMP PANEL
3. PIERCE L.E.D. DUAL LIGHT STRIPS IN ALL REAR BODY COMPARTMENTS
4. TWO BIN MAP BOX SHIPPED LOOSE
5. MOUNTING BASES FOR 2-WAY RADIO ANTENNAS LOCATED PER SHOP ORDER
6. DUAL MODULE VEHICLE DATA RECORDER
7. KUSSMAUL BATTERY CHARGER LOCATED IN CREW CAB SEAT RISER
8. BATTERY CHARGE INDICATOR LOCATED IN D.S. STEP WELL
9. KUSSMAUL NAV-PAC DC POWER CONDITIONER LOCATED IN CAB
10. S/STL ROLL-UP DOOR GUARDS FOR ALL REAR BODY COMPARTMENTS
11. LOCKING LIFT BAR ON ROLL-UP DOOR FOR ALL REAR BODY COMPARTMENTS
12. PULL STRAP ON DOOR IN COMPARTMENT D1, D2, D3, P1, P2 & P3
13. PERIMETER SCENE LIGHTS LOCATED PER SHOP ORDER
14. ONE VERTICAL PARTITION IN COMPARTMENT D1
15. ONE ADJUSTABLE SHELF LOCATED IN COMPARTMENT D1 & P2; TWO IN D3 AND THREE IN P3
16. ONE SHELF TRACK SET LOCATED IN COMPARTMENT D1, D3, P2 & P3
17. EXTERNAL FOAM SYSTEM
18. CIRCUIT BREAKER PANEL LOCATED IN COMPARTMENT D3
19. TRIDENT FOLDING STEPS WITH L.E.D. LIGHT

REV	DATE	BY	CH
1	10MAR15	BZI	JGO
2	05FEB15	BZI	JGO
3	07NOV14	BZI	CTR

CHASSIS DATA
MAKE: PIERCE
MODEL: IMPEL

Pierce MANUFACTURING INC.

TITLE: 1250-D-780P 152 BDY F HT FRT & REAR, FDLER, DS & PS HYD EQUIPMENT RACK, 10K HYD GENERATOR, 30G FOAM CELL

FOR: SEMINOLE COUNTY FIRE DEPARTMENT SANFORD, FLORIDA

DWG NO.: 28338AD

JOB NO.: 28338 01-06
SCALE: 1:24
DATE
DRAWN BY: BZI 28OCT14
CHECKED BY: CTR 30OCT14
SHEET SIZE: D
SHEET NO.: 1 OF 1

View File Created 10-MAR-2015 12:08:21