PASSENGER'S SIDE COMPARTMENTS CONTAIN THE FOLLOWING:

COMPARTMENT P1 CONTAINS:
- (1) STD DEPTH ADJ SHELF
- (1) STD DEPTH ADJ SLIDE OUT/TILT TRAY WITH ON-SCENE SLIDES
- (1) FLOOR MOUNTED TRAY W/ON-SCENE SLIDES
- MOUNTING PROVISIONS FOR 2 HYDRAULIC REELS
- (1) 30A,240V T.L. RECEPTACLE
-
-

COMPARTMENT P2 CONTAINS:
- (1) STD DEPTH ADJ SLIDE OUT/TILT TRAY
-
-
-

COMPARTMENT P3 CONTAINS:
-
-
-
-

COMPARTMENT P4 CONTAINS:
- (1) ELECTRIC CORD REEL WITH 250' OF 10/3 YELLOW CORD
- (1) 15A,120V DUPLEX RECEPTACLE
-
-

COMPARTMENT P5 CONTAINS:
- (1) CAB LIFT CONTROLLER WITH S/S COVER
- (1) 1,000# HORIZONTAL DIVIDER
- (2) 2-WAY ADJ SLIDE OUT TRAYS W/TOOLBOARDS
- (1) TRANSVERSE VERTICAL DIVIDER
- (1) HORIZONTAL FLOOR EXTENSION
- (1) 30A,240V T.L. RECEPTACLE

COMPARTMENT P6 CONTAINS:
- (1) RACK FOR THE FOLLOWING:
  - (2) STOKES BASKETS
  - (1) LITTLE GIANT LADDER
  - (1) DUO SAFETY 10' 701 FRESNO LADDER
  - (4) PIKE POLES
-

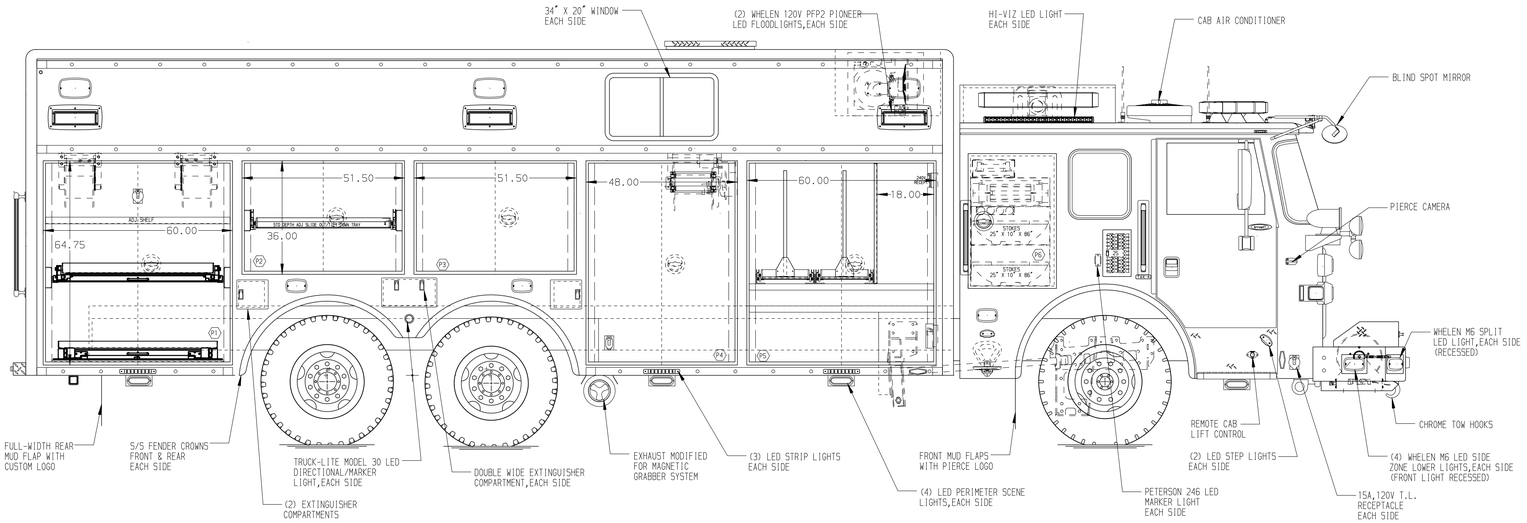

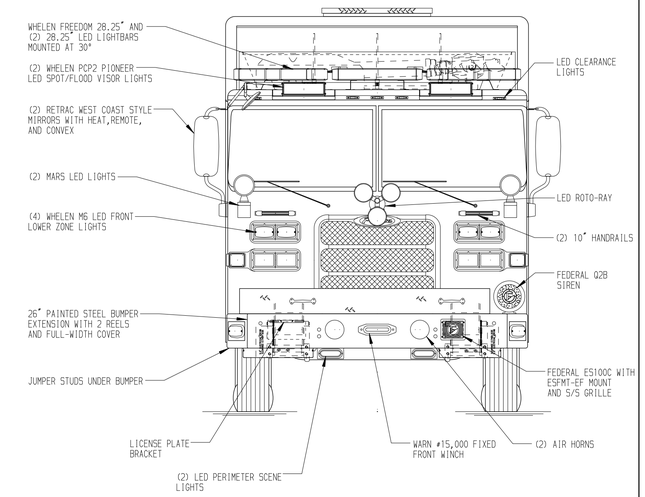

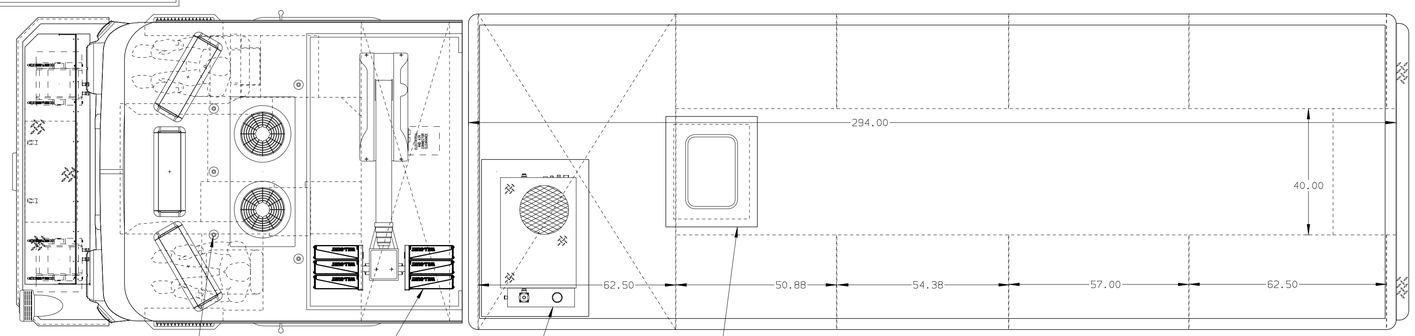

DRIVER'S SIDE COMPARTMENTS CONTAIN THE FOLLOWING:

COMPARTMENT D1 CONTAINS:
- (1) STD DEPTH ADJ SHELF
- (1) STD DEPTH ADJ SLIDE OUT/TILT TRAY WITH ON-SCENE SLIDES
- (1) FLOOR MOUNTED TRAY W/ON-SCENE SLIDES
- MOUNTING PROVISIONS FOR 2 HYDRAULIC REELS
- (1) 30A,240V T.L. RECEPTACLE
-
-

COMPARTMENT D2 CONTAINS:
-
-
-
-

COMPARTMENT D3 CONTAINS:
-
-
-
-
-
-

COMPARTMENT D4 CONTAINS:
- (2) STD DEPTH ADJ SLIDE OUT/TILT TRAYS
- (1) FLOOR MOUNTED TRAY
- (1) ELECTRIC CORD REEL WITH 250' OF 10/3 YELLOW CORD
-
-

COMPARTMENT D5 CONTAINS:
- (1) 1,000# HORIZONTAL DIVIDER
- (2) 2-WAY ADJ SLIDE OUT TRAYS W/TOOLBOARDS
- (1) TRANSVERSE VERTICAL DIVIDER
- (1) HORIZONTAL FLOOR EXTENSION
- (1) NIGHT SCAN CONTROLLER
-

COMPARTMENT D6 CONTAINS:
- (1) RACK FOR THE FOLLOWING:
  - (2) STOKES BASKETS
  - (1) LITTLE GIANT LADDER
  - (1) DUO SAFETY 10' 701 FRESNO LADDER
  - (4) PIKE POLES
-
-
-

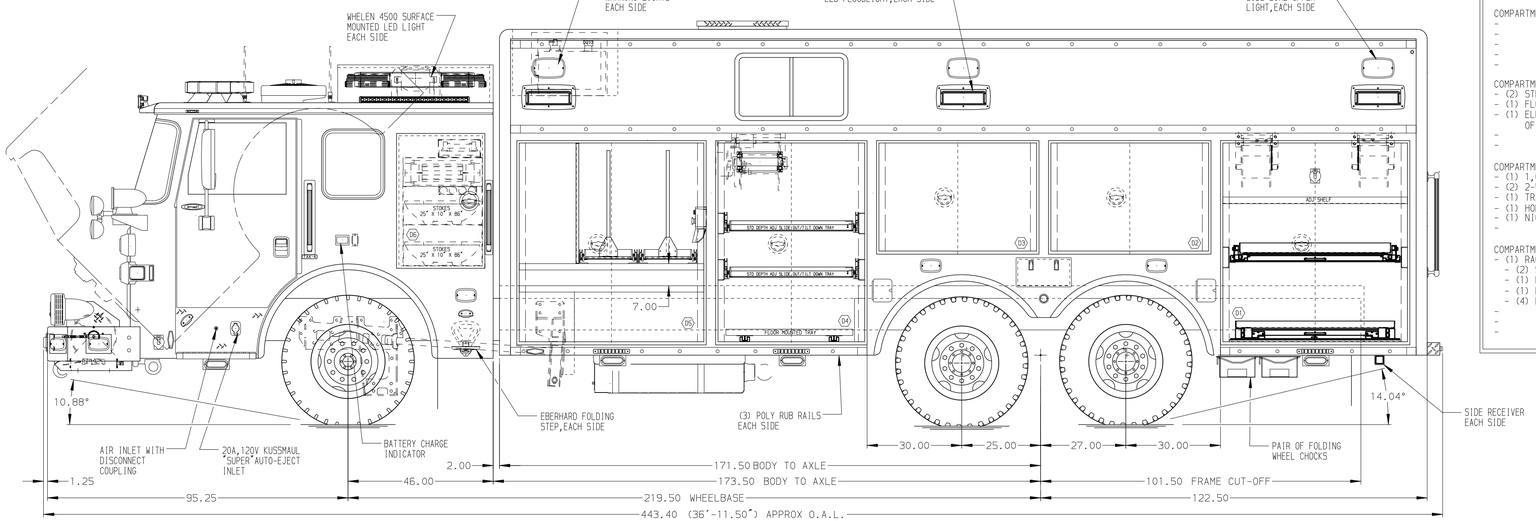

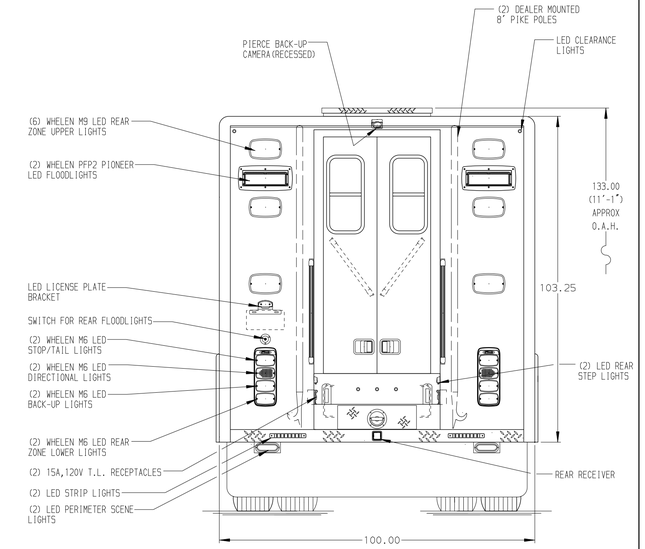

NOTE:
LAP DOORS HAVE BEEN SHOWN IN HIDDEN LINES TO CLEARLY IDENTIFY THE EQUIPMENT IN EACH COMPARTMENT. DASHED LINES ON SIDES ARE DOORS IN OPEN POSITION

NOTE

DIMENSIONS SHOWN ARE APPROXIMATE AND ARE SUBJECT TO MINOR DEVIATIONS AS MAY OCCUR OR BE NECESSARY IN CONSTRUCTION.
MINOR DETAILS NOT SHOWN.

NOTES:
1. RUD AUTOMATIC TIRE CHAINS
2. VOGUL LUBE SYSTEM
3. S/S SCUFFPLATES ON CAB DOOR JAMBS AND BEHIND HANDRAILS
4. S/S SCUFFPLATES ON BOTTOM OF CAB AND BODY COMPARTMENT DOOR FRAMES
5. FLOOR IN CAB TO BE PADDED RUBBER
6. KUSSMAUL 1200 CHARGER LOCATED BEHIND DRIVER'S SEAT WITH S/S COVER
7. (2) 9,000# RECEIVER STYLE TIE DOWNS
8. PIERCE DUAL LED COMPARTMENT LIGHTS IN EACH BODY COMPARTMENT
9. 20A,120V 6-PLACE RECEPTACLE STRIPS LOCATED BEHIND THE DRIVER'S SEAT ON ENGINE TUNNEL

MAXIMUM O.A.H. 11'-1"

MAXIMUM O.A.L. 36'-11.50"

SIDE ROLL & FRONTAL IMPACT PROTECTION

CLEAR DOOR WIDTH KEY

AMDOR ROLL UP DOORS:	-1 7/8"
GORTITE ROLL UP DOORS:	-2 3/4"
PIERCE DOUBLE LAP DOORS:	-4 1/4"
PIERCE LIFT-UP LAP DOORS:	-1 1/2"

(EX: 60"F-F - 1 7/8"= 58 1/8" CLEAR)
(F-F)= FRAME TO FRAME

REV	DATE	BY	CH
1	01FEB16	DHE	AZU
2	04DEC15	DHE	AZU
3	02SEP15	DHE	CDK

CHASSIS DATA
MAKE: PIERCE
MODEL: AX4600

Pierce MANUFACTURING INC.

TITLE: HEAVY DUTY RESCUE
WALKIN

FOR: LONGWOOD FIRE COMPANY
LONGWOOD, PA
CURT WOERTH

DWG NO. 29010AD-SH1

JOB NO.	29010
SCALE	1:24
DATE	
DRAWN BY	DHE
	06AUG15
CHECKED BY	AZU
	17AUG15
SHEET SIZE	D
SHEET NO.	1 OF 2

View File Created 02-FEB-2016 09:03:40