APEX ACCESS DEVICE

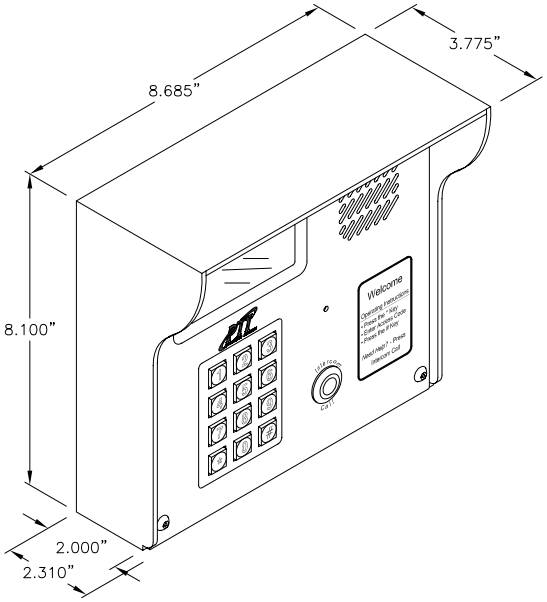

Vandal Resistant

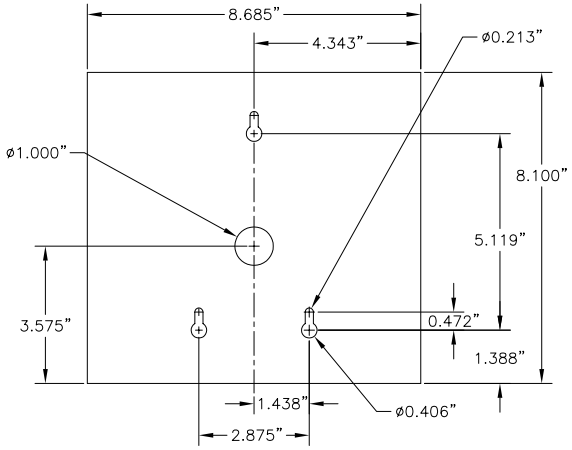

Mounting Hole Detail

Features

- **Intercom/LEF**
- **Music Intercom/NEM**
- **Camera - B/W NTSC or PAL (Optional)**
- **Camera - Color NTSC or PAL (Optional)**
- **Large, Multiline, Backlit Display**
- **Metal, Vandal Resistant, Backlit Touchpad**
- **Rugged Aluminum Construction**
- **Bronze Powder-Coated Finish**
- **Instruction Messages Display**
- **Low Power Consumption**
- **PIN Number**
- **Integrated Proximity Input (Optional)**
- **Magnetic Stripe Reader (Optional)**
- **Tamper Sensor Protected**
- **Dual Relay Outputs**
- **Enhanced Functions To Set Gates, Program Door Strikes**
- **Multiple Mounting Methods: Gooseneck, Wall, & Flush**

Specifications

Power Supply:

Voltage:	**12 - 24VDC or 12 - 18VAC**
Current Consumption:	**250mA Maximum**

Relay Outputs (resistive load):

Maximum Switching Voltage:	**30VAC/DC**
Maximum Switching Current:	**AC: 10A (NO)/3A (NC)**
	DC: 5A (NO)/3A (NC)
Maximum Switching Capacity:	**1250VD (NO)**
	375VA (NC)
Minimum Permissible load:	**10mA @ 5VDC**
Contact Resistance:	**100 mΩ Maximum**
Life Expectancy:	
Mechanical:	**10,000,000 Operations**
Electrical:	**200,000 Operations Minimum (at maximum rated load)**

Inputs:

Dry Contact Type ONLY.

DO NOT apply voltage to any of the inputs.

Dry Contact Specifications:

Contact Resistance:	**500 mΩ Maximum**
Current Capacity:	**100mA @ 5VDC Minimum**

Environmental:

Ambient Temperature:	**-40°C to +80°C (-40°F to 176°F)**
Ambient Humidity:	**0% to 100%***

***The humidity in housing for any APEX device cannot exceed 100% & must be non-condensing.**

Corporate Headquarters
PTI Integrated Systems
Scottsdale, AZ
800.331.6224
www.ptiaccess.com

PTI East
Baltimore, MD
800.933.3716
www.ptieast.com

PTI Europe
London, England
+44 (0) 20 8892 6317
www.ptieurope.com

PTI Australaisa
Brisbane, Australia
61 7 3216 5524
www.ptiaustralasia.com

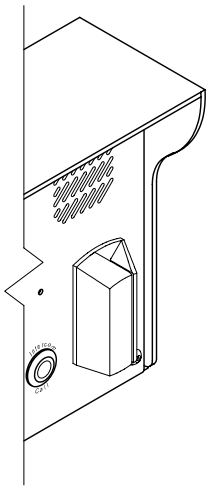

With Magnetic Stripe Reader

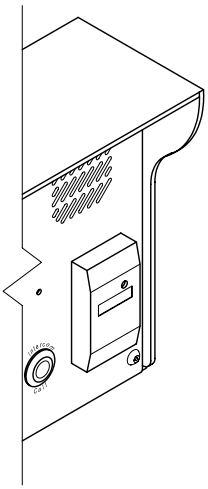

With Proximity Reader

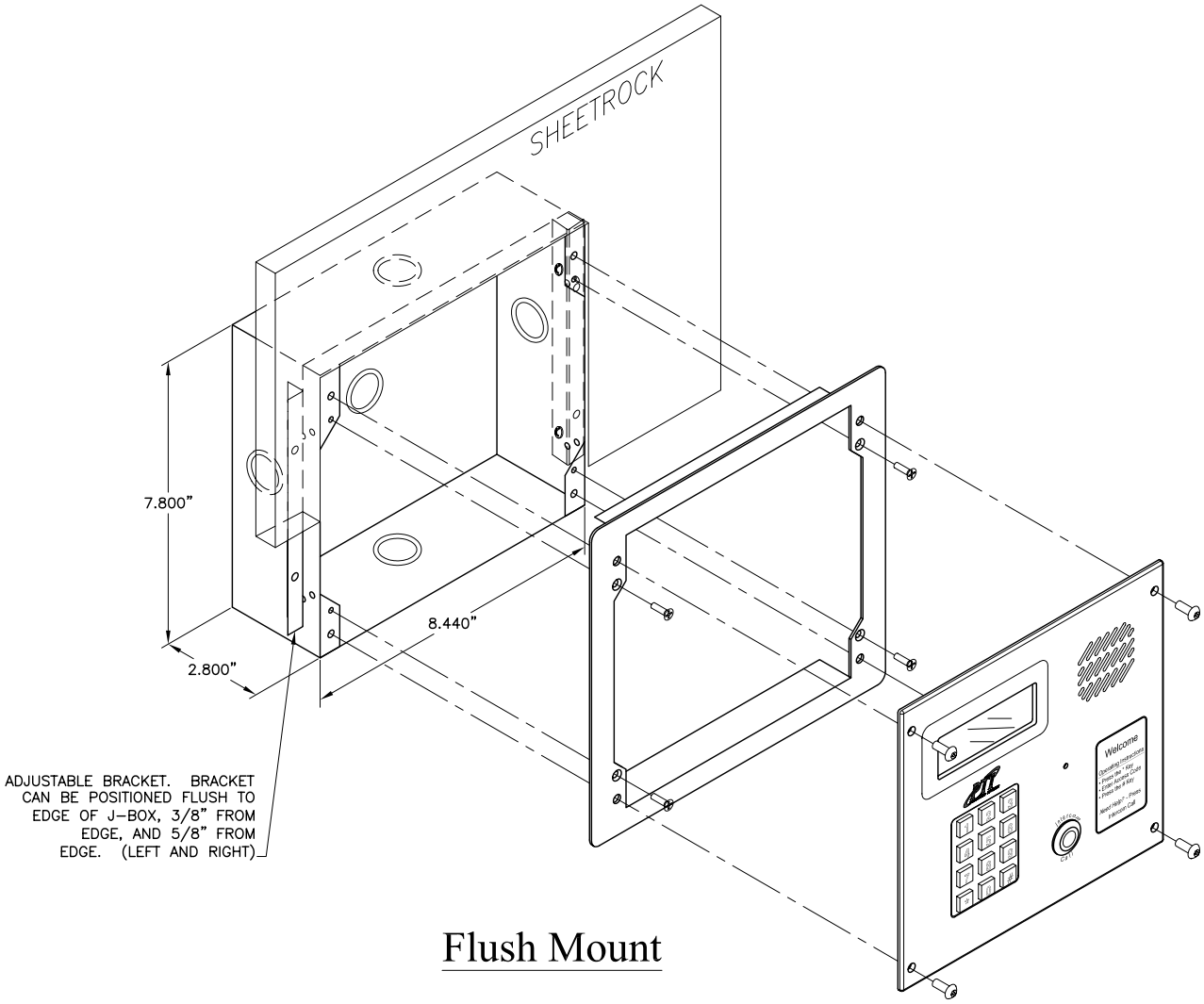

Flush Mount

Corporate Headquarters
PTI Integrated Systems
Scottsdale, AZ
800.331.6224
www.ptiaccess.com

PTI East
Baltimore, MD
800.933.3716
www.ptieast.com

PTI Europe
London, England
+44 (0) 20 8892 6317
www.ptieurope.com

PTI Australaisa
Brisbane, Australia
61 7 3216 5524
www.ptiaustralasia.com