PTI INTEGRATED SYSTEMS PROPRIETARY
THIS DOCUMENT AND THE INFORMATION DISCLOSED HEREIN ARE PROPRIETARY DATA OF PTI INTEGRATED SYSTEMS. NEITHER THIS DOCUMENT NOR THE INFORMATION CONTAINED HEREIN SHALL BE REPRODUCED, USED OR DISCLOSED TO OTHERS WITHOUT THE WRITTEN AUTHORIZATION OF PTI INTEGRATED SYSTEMS.

PT REV	DESCRIPTION	BY	DATE
–	RELEASED.	LAC	12/22/00

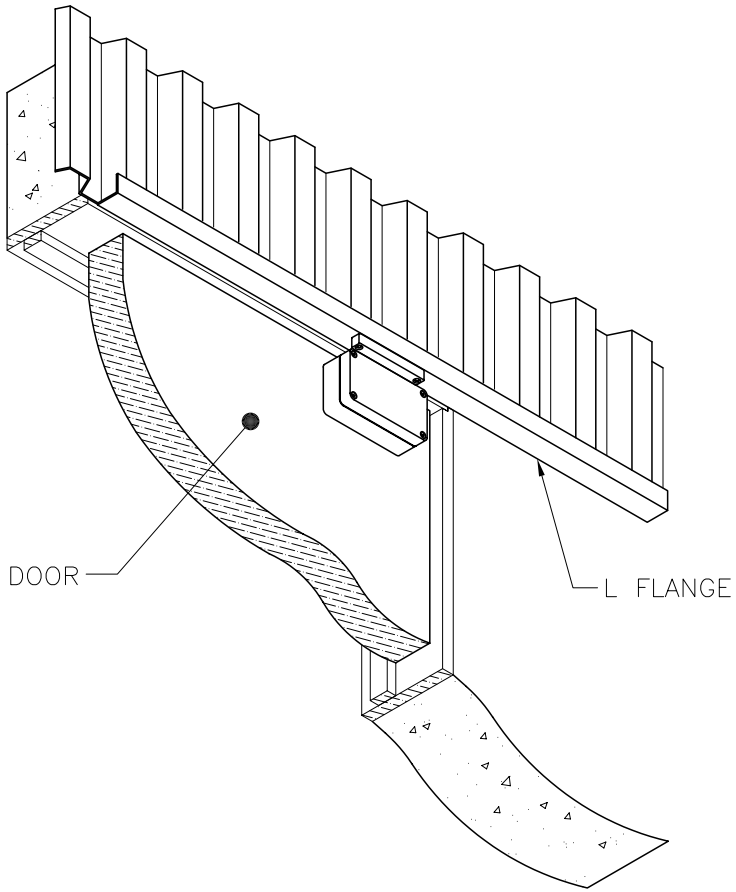

CURRENT – MAGNET MOUNTED TO BOTTOM OF L FLANGE (VIEW FROM OUTSIDE OF UNIT)

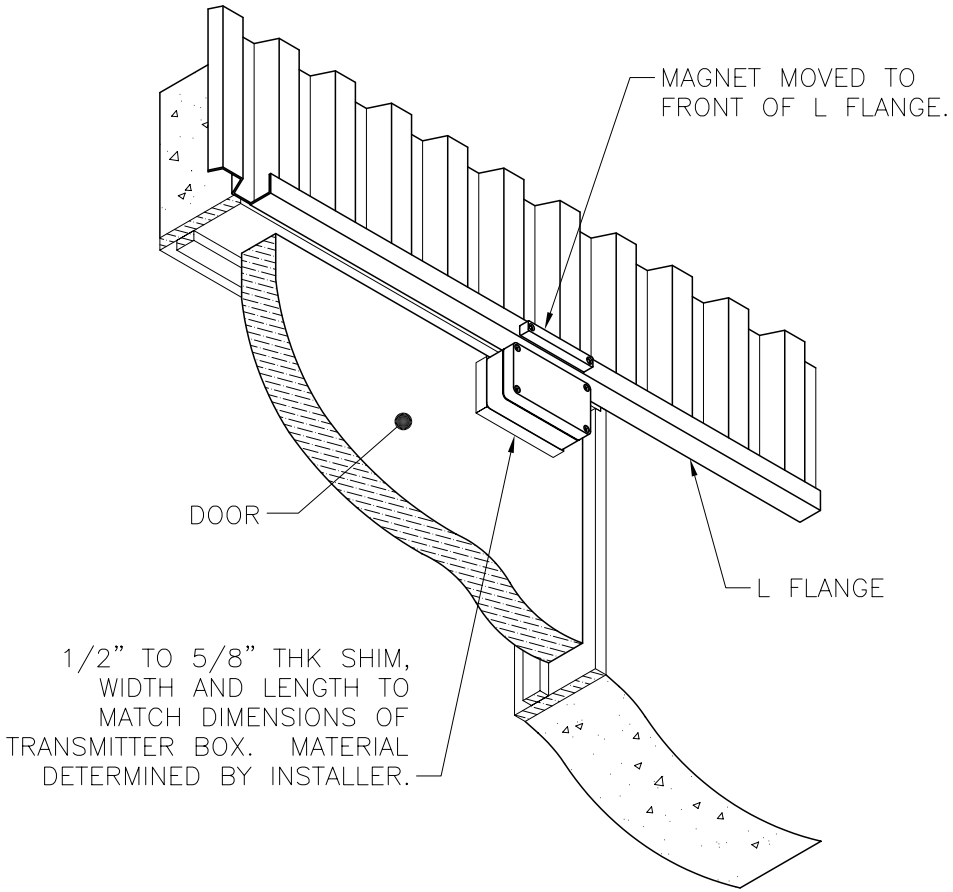

REVISED – MAGNET MOUNTED TO FRONT OF L FLANGE WITH SHIM UNDER TRANSMITTER BOX (VIEW FROM OUTSIDE OF UNIT)

THIRD ANGLE PROJECTION

UNLESS OTHERWISE SPECIFIED
ALL DIMENSIONS IN INCHES.
TOLERENCE: ±
ANGLE TOLERENCE (DEG): ±
REMOVE BURRS & SHARP EDGES.

PTI INTEGRATED SYSTEMS
8271 E. Gelding Drive
Scottsdale, AZ 85260
Phone 480.991.1259
FAX 480.991.1395

ORIG. DATE 12/22/00

DRAWING DESCRIPTION
WIRELESS TRANSMITTER AND MAG PLACEMENT REVISION

SIZE	SCALE	DWG NO.	DWG REV
C	NONE		–.00

DRAWN BY L. CAMPANELLI
SHEET 1 OF 1