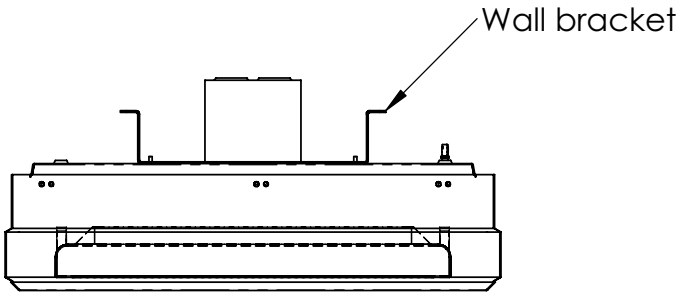

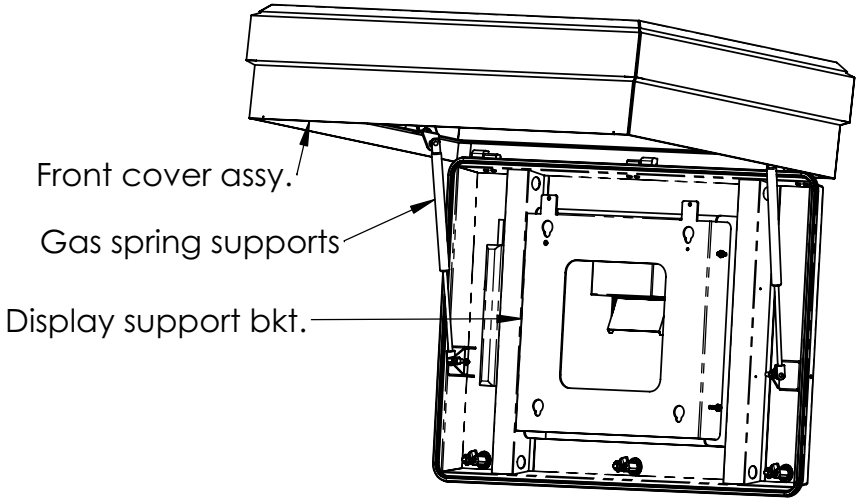

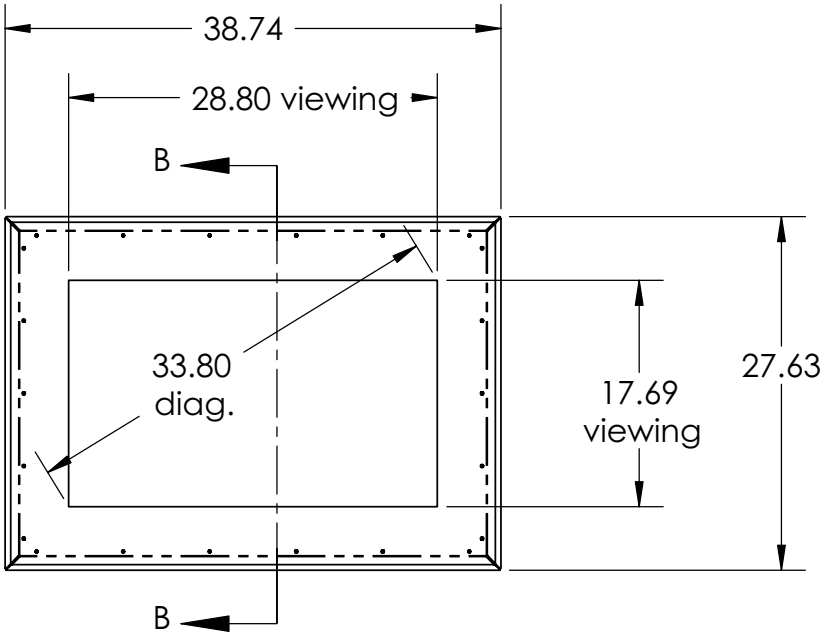

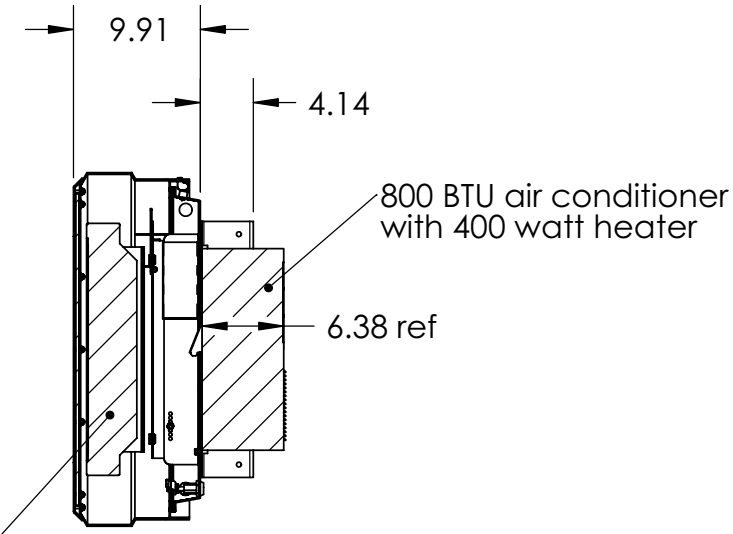

SECTION B-B

LCD display
ref Samsung 323T
(by others)

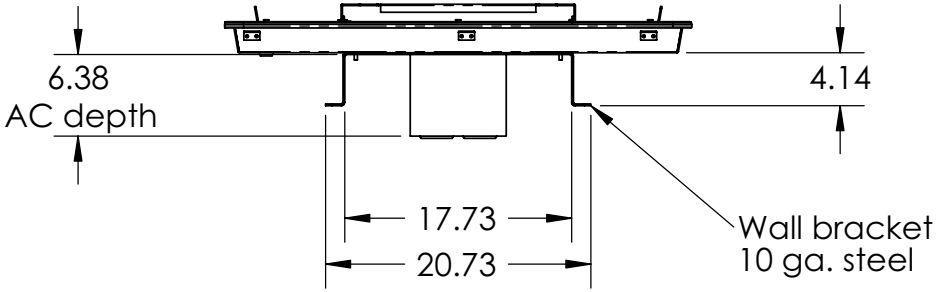
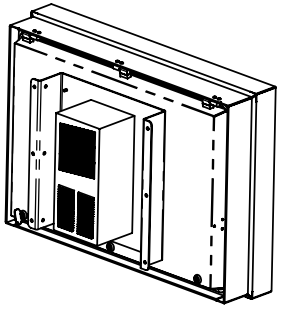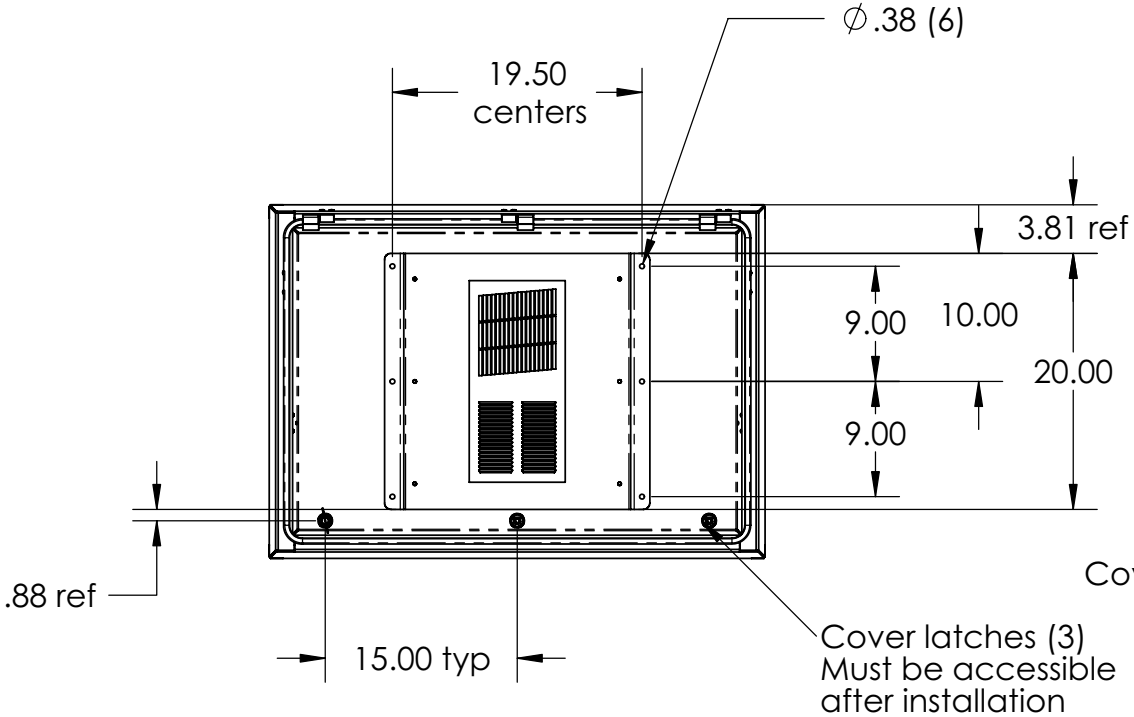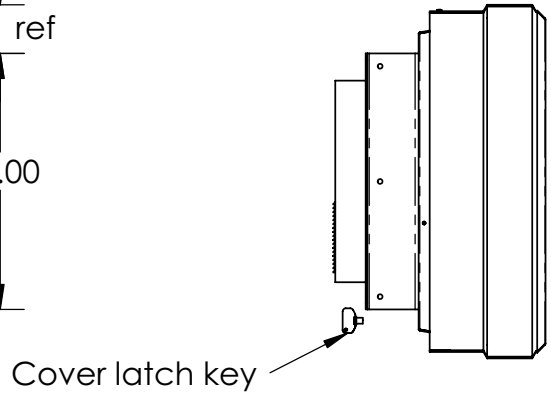
TOP VIEW (less cover assy)