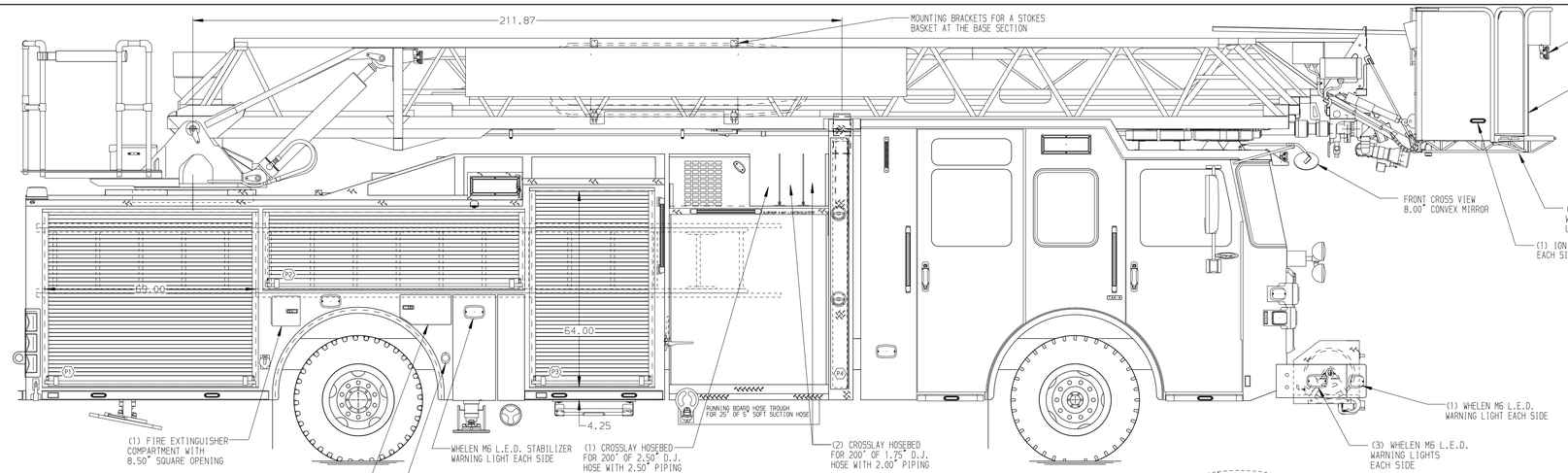

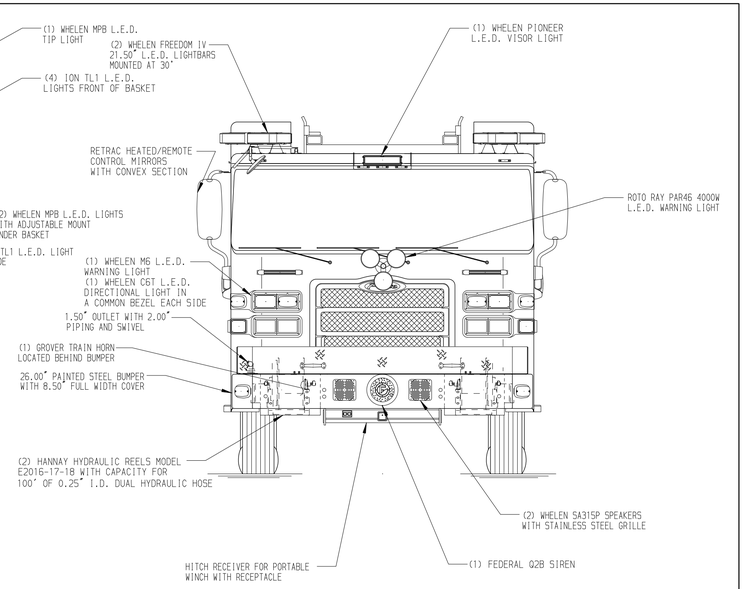

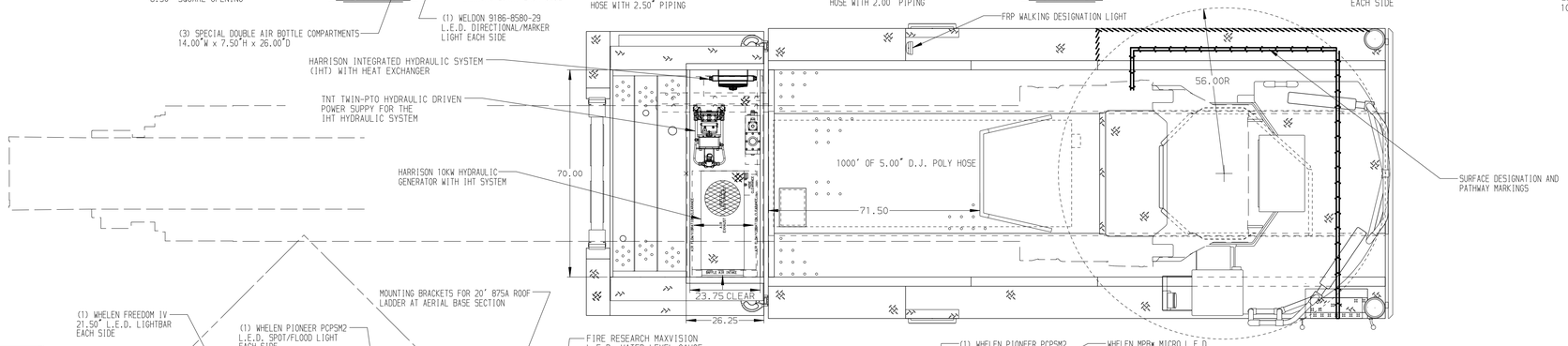

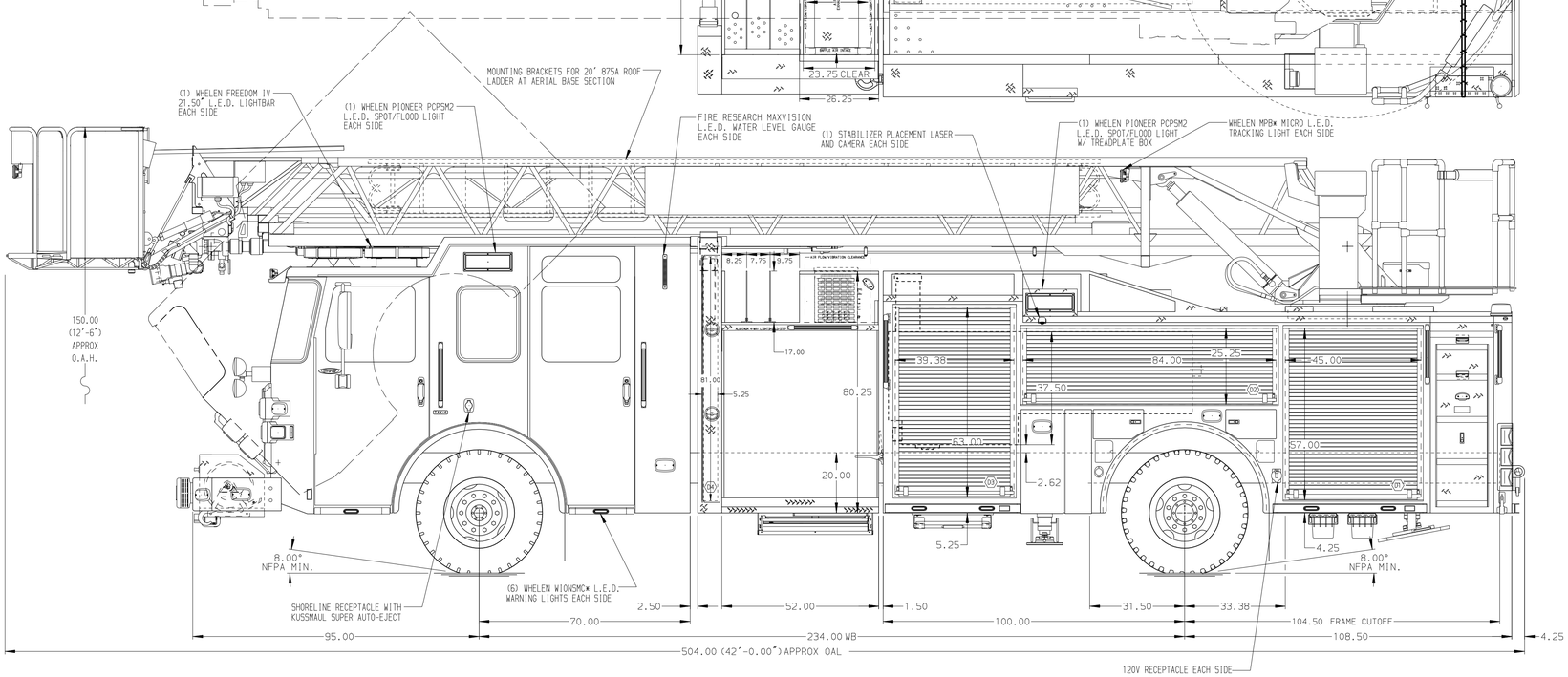

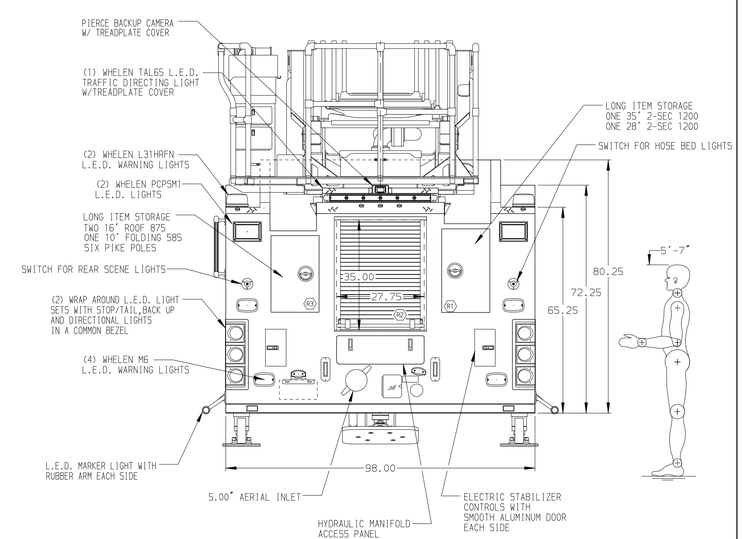

ALUMINUM BODY

NOTE

DIMENSIONS SHOWN ARE APPROXIMATE AND ARE SUBJECT TO MINOR DEVIATIONS AS MAY OCCUR OR BE NECESSARY IN CONSTRUCTION.
MINOR DETAILS NOT SHOWN.

1. DUAL L.E.D. LIGHT STRIPS LOCATED IN HOSE BED
2. ONSPOT AUTOMATIC TIRE CHAINS TO BE PROVIDED AT REAR
3. AIR INLET WITH DISCONNECT COUPLING IN THE DRIVER SIDE STEPWELL
4. BATTERY CHARGER LOCATED BEHIND DRIVER'S SEAT
5. BATTERY CHARGE INDICATOR LOCATED ON THE DRIVER SIDE SEAT RISER
6. ONE ADJUSTABLE SHELVES IN COMPARTMENTS P2,P3,R2- TWO IN D1,P1 & P3
7. ONE FLOOR MOUNTED SLIDE-OUT TRAY IN COMPARTMENTS D1 & P1
8. NON-RAISED AERIAL PEDESTAL
9. 1250 GPM HIGH FLOW WATERWAY
10. ZIAMATIC SCBA HOLDER BRACKET LOCATED IN COMPARTMENT D3
11. AIR OUTLET WITH SHUT OFF VALVE LOCATED ON DRIVER'S SIDE PUMP PANEL
12. CIRCUIT BREAKER PANEL IN COMPARTMENT P3
13. ONE SWING-OUT ALUMINUM TOOL BOARD IN COMPARTMENTS D2
14. CTECH DRAWER ASSEMBLY IN COMPARTMENT D3
15. 2-WAY INTERCOM SYSTEM BETWEEN AERIAL TIP AND TURNTABLE
16. LIFTING EYE ROPE RESCUE ATTACHMENT AT AERIAL TIP
17. NO LIMITED RETRACTION
18. ONE "L" SHAPED PARTITION IN COMPARTMENTS D3 & P2
19. ONE 15A 120V SIX PLACE RECEPTACLE STRIP LOCATED IN COMPARTMENT P3
20. ONE SLIDE-OUT TRAY LOCATED IN COMPARTMENT P3
21. ONE AIR BAG RACK LOCATED UNDER SHELF IN COMPARTMENT R1
22. ONE INVERTED SHELF MOUNTED IN COMPARTMENT D3

REV	DATE	BY	CH
V	13SEP18	SHU	PPE
V	05SEP18	SVA	PPE
V	09AUG18	SVA	PPE
V	18MAY18	SVA	GRM

CHASSIS DATA
MAKE: PIERCE
MODEL: ENFORCER

Pierce MANUFACTURING INC.

TITLE: 110' ASCENDANT AERIAL LADDER AND BODY ASSEMBLY 400 GALLON WATERTANK
FOR: CITY OF SANDY SPRINGS SANDY SPRINGS, GA
DWG NO.: 32581AD

JOB NO.	32581
SCALE	1:24
DATE	
DRAWN BY	SVA 30APR18
CHECKED BY	CRI 11MAY18
SHEET SIZE	D
SHEET NO.	1 OF 1

View File Created 13-SEP-2018 12:46:17