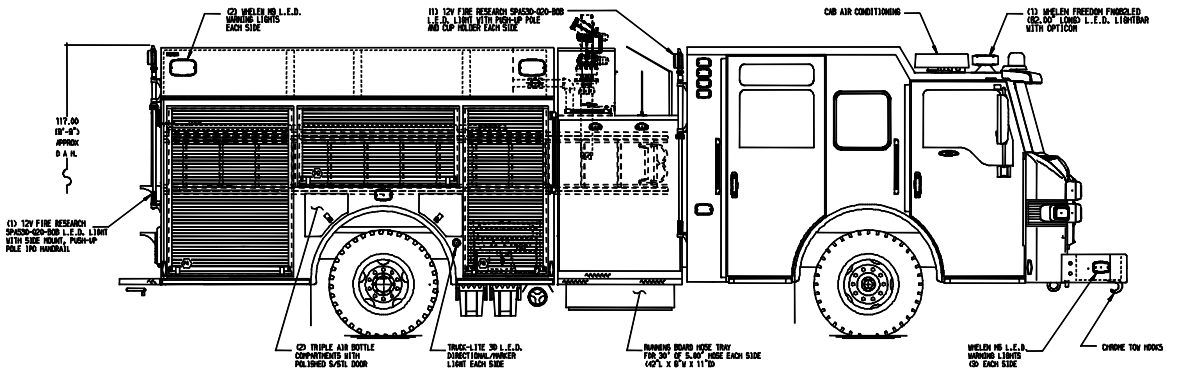

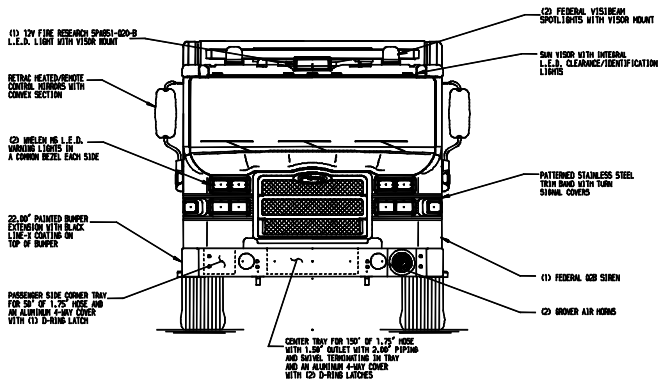

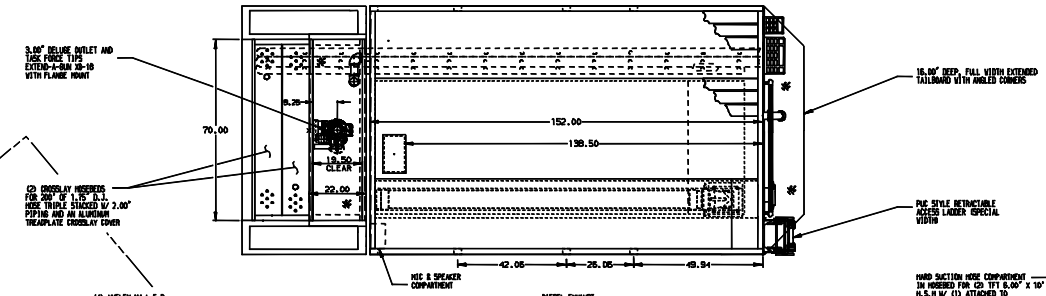

HOSEBED CAPACITIES
1. 1000' OF 5.00" D.J. POLY HOSE
2. 200' OF 2.50" D.J. POLY HOSE
3. 300' OF 3.00" D.J. POLY HOSE

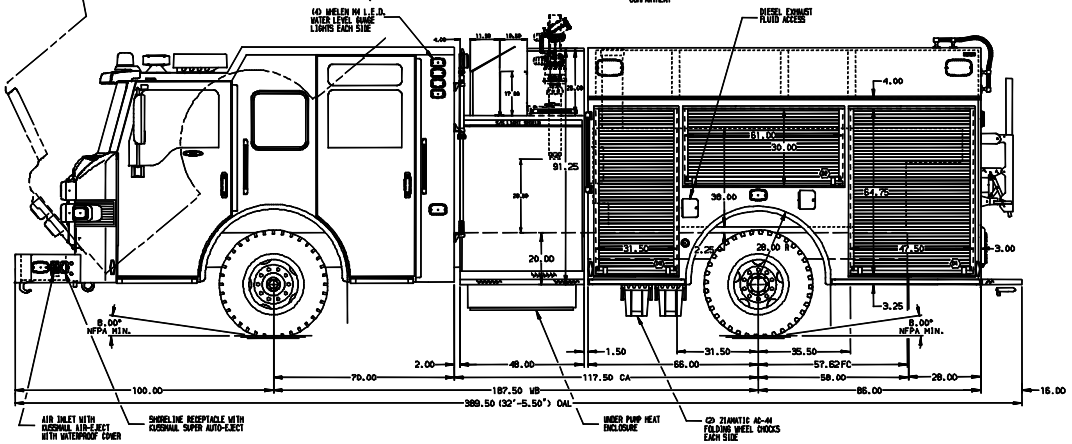

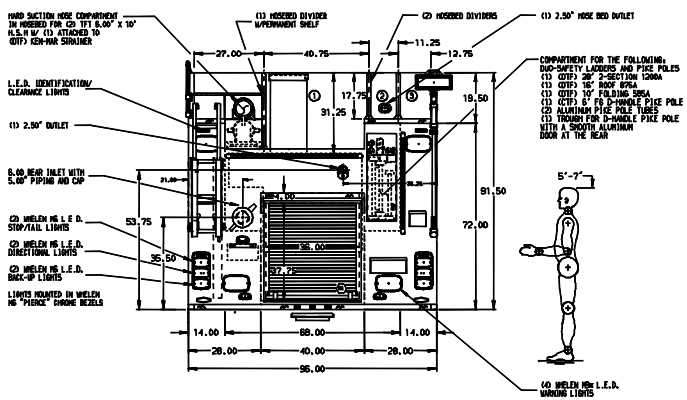

ALUMINUM BODY

NOTE
DIMENSIONS SHOWN ARE APPROXIMATE AND ARE SUBJECT TO MINOR DEVIATIONS AS MAY OCCUR OR BE NECESSARY IN CONSTRUCTION.
MINOR DETAILS NOT SHOWN.

1. INSTA-CHAIN AUTOMATIC TIRE CHAINS TO BE PROVIDED AT REAR
2. ALUMINUM TREADPLATE EXTERIOR REAR WALL OF CAB
3. S/STL SCUFFPLATE ON EACH CAB DOOR JAMB
4. MOUNTING BASE FOR ANTENNA LOCATED PER SHOP ORDER
5. CUSHMAN BATTERY CHARGER LOCATED BEHIND DRIVER'S SEAT
6. BATTERY CHARGER INDICATOR LOCATED IN DRIVER'S STEP WELL
7. PERIMETER SCENE LIGHTS LOCATED PER SHOP ORDER
8. S/STL SCUFFPLATE ON REAR OUTER CORNER OF BODY
9. MINOR L.E.D. COMPARTMENT DUAL LIGHT STRIPS LOCATED PER SHOP ORDER
10. PAINTED SHELF TRACKS LOCATED IN ALL BODY COMPARTMENTS
11. ONE FULL WIDTH/DEPTH PAINTED ADJUSTABLE SHELF IN COMPARTMENT D1, D2, P1 & P3
12. ONE FLOOR MOUNTED SLIDE-OUT TRAY IN COMPARTMENT D3
13. ONE FLOOR MOUNTED INVERTED SLIDE-OUT TRAY IN COMPARTMENT P1 & R1
14. ONE ADJUSTABLE TOOL BOARD MOUNTED TO SLIDE-OUT TRAY IN COMPARTMENT D3
15. ALL FOLDING STEPS TO BE TRIDENT WITH INTEGRATED L.E.D. LIGHT UNLESS SPECIFIED
16. HONDA EM4000 GENERATOR MOUNTED ON SLIDING TRAY IN COMPARTMENT P3
17. PIERCE LOOD MUDFLAPS FRONT AND REAR
18. STAINLESS STEEL FENDER GROMMS FRONT AND REAR
19. BLACK POLY MOUNTING BOARD ON SIDE WALLS IN COMPARTMENT D3
20. ONE DUPLEX RECEPTACLE IN COMPARTMENT D1 & P1; FOUR LOCATED IN THE CAB
21. BLACK POLY MOUNTING BOARD ON THE FLOOR IN COMPARTMENT P2
22. BLACK POLY MOUNTING BOARD ON THE REAR WALL IN COMPARTMENT P2

REV	DATE	BY	CH		
				CHASSIS DATA	
V	16SEP14	DDO	JBO	MAKE	PIERCE
V	28AUG14	DDO	JBO		
V	20JUN14	DDO	SHA	MODEL	IMPEL

PIERCE MANUFACTURING INC.

TITLE	1750-D-750P, 152" BODY FH FDLER, 48" SIDE CONTROL (2) X-LAYS, LADDERS BESIDE TANK, FLUSH REAR W/16"TLB	JOB NO.	27810 01-02
		SCALE 1:24	DATE
FOR	MONROE FIRE DEPARTMENT MONROE, WI	DRAWN BY DDO	13JUN14
		CHECKED BY SHA	16JUN14
DWG NO.	27810AD	SHEET SIZE D	SHEET NO. 1 OF 1

View File Created 18-SEP-2014 11:47:43