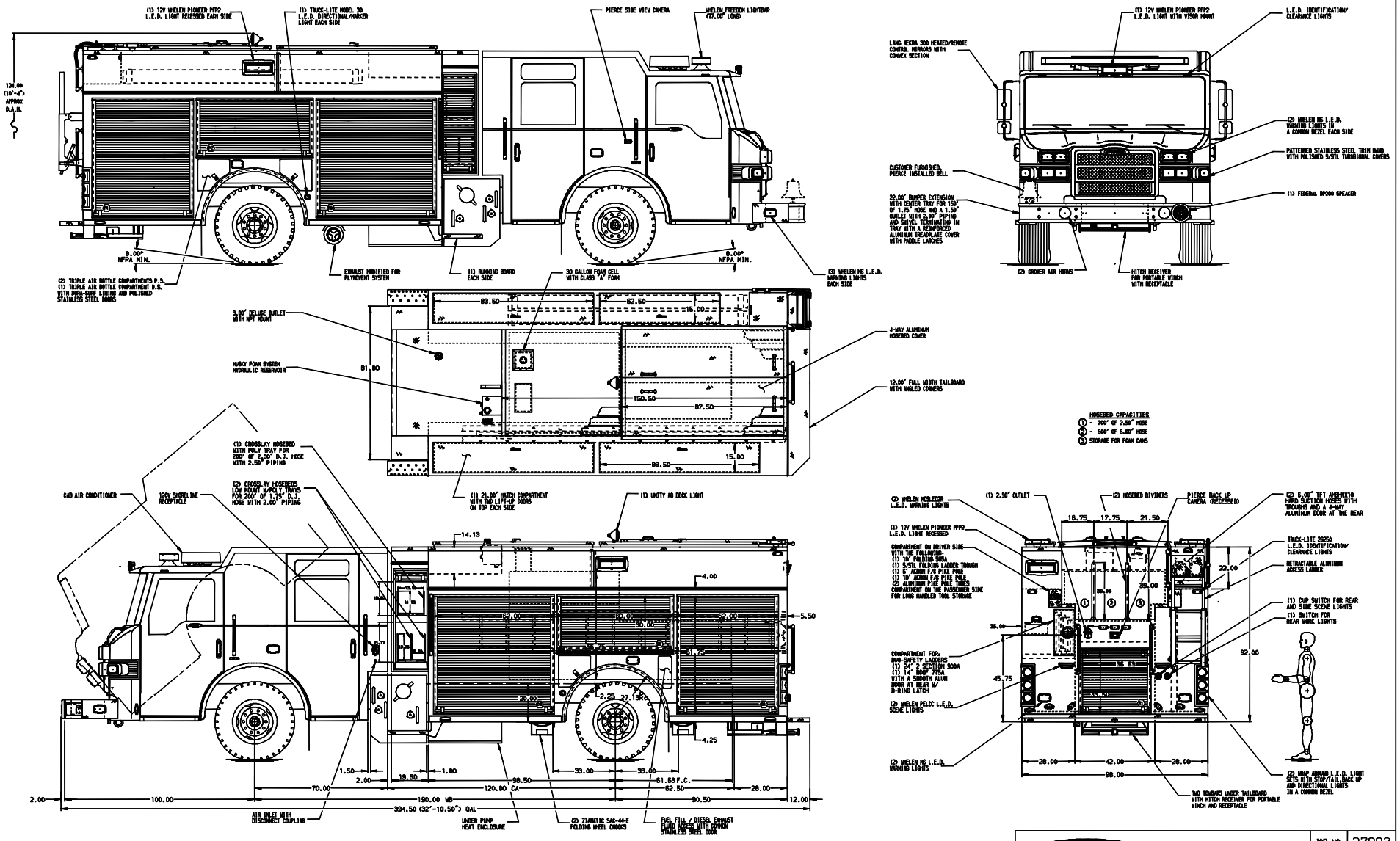

ALUMINUM BODY

MAXIMUM O.A.H. 135.00"

SIDE ROLL AND FRONTAL IMPACT PROTECTION

NOTE

DIMENSIONS SHOWN ARE APPROXIMATE AND ARE SUBJECT TO MINOR DEVIATIONS AS MAY OCCUR OR BE NECESSARY IN CONSTRUCTION.
MINOR DETAILS NOT SHOWN.

1. ALUMINUM TREADPLATE EXTERIOR REAR WALL OF CAB
2. MOUNTING BASE FOR ANTENNA LOCATED PER SHOP ORDER
3. BATTERY CHARGER LOCATED IN PUMP PLUMBING AREA
4. BATTERY CHARGE INDICATOR LOCATED ON D.S. PUMP PANEL
5. PERIMETER SCENE LIGHTS LOCATED PER SHOP ORDER
6. PIERCE L.E.D. DUAL COMPARTMENT LIGHT STRIPS LOCATED PER SHOP ORDER
7. ONE PAINTED ADJUSTABLE FULL WIDTH/FULL DEPTH SHELF IN COMPARTMENT P3 & R1, TWO IN D1 & D3
8. ONE PAINTED FLOOR MOUNTED SLIDE-OUT TRAY IN COMPARTMENT P1
9. ONE PAINTED ADJUSTABLE SLIDE-OUT TRAY IN COMPARTMENT P1
10. ONE PAINTED ADJUSTABLE TILTING SLIDE-OUT TRAY IN COMPARTMENT P1, P2 & P3
11. ALUMINUM SWING-OUT TOOLBOARD WITH PAC TRAC IN COMPARTMENT D2
12. TURTLE TILE MATTING WITH RAMP IN COMPARTMENT D1, D2, D3, P2 & R1
13. TURTLE TILE MATTING ON ALL SHELVES/TRAYS
14. PAC TRAC ON THE REAR WALL OF COMPARTMENT D2 AND EACH SIDE FORWARD FACING CREW CAB WALL
15. LITTLE GIANT SUPER DUTY LADDER TO MOUNTED ON THE FLOOR IN COMPARTMENT P3
16. TWO SENTREY E-PLACE RECEPTACLE STRIPS LOCATED IN CAB
17. PIERCE LOGO MUDFLAPS FRONT AND REAR
18. HATCH COMPARTMENT L.E.D. LIGHT STRIPS LOCATED PER SHOP ORDER
19. S/STL FENDER GROMMS FRONT AND REAR
20. THREE ADDITIONAL POLY TRAYS TO BE SHIPPED LOOSE
21. FOUR 120V DUPLEX RECEPTACLES LOCATED IN THE CAB

REV	DATE	BY	CH
1	18SEP14	JLS	SHE
2	21AUG14	DDO	SHE
3	24JUN14	DDO	SHA

CHASSIS DATA
MAKE: PIERCE
MODEL: IMPEL

Pierce MANUFACTURING INC.

TITLE	1500-D-750 720 GAL WATER W/30 GAL FOAM CELL,189" PUC (3) XLAYS, LADDERS THRU BODY, DELUGE, A/C	JOB NO.	27993
		SCALE 1:24	DATE
FOR	SHEBOYGAN FIRE DEPARTMENT SHEBOYGAN, WISCONSIN	DRAWN BY DDO	20JUN14
		CHECKED BY SHA	23JUN14
DWG NO.	27993AD	SHEET SIZE D	SHEET NO. 1 OF 1

View File Created 02-OCT-2014 12:37:21