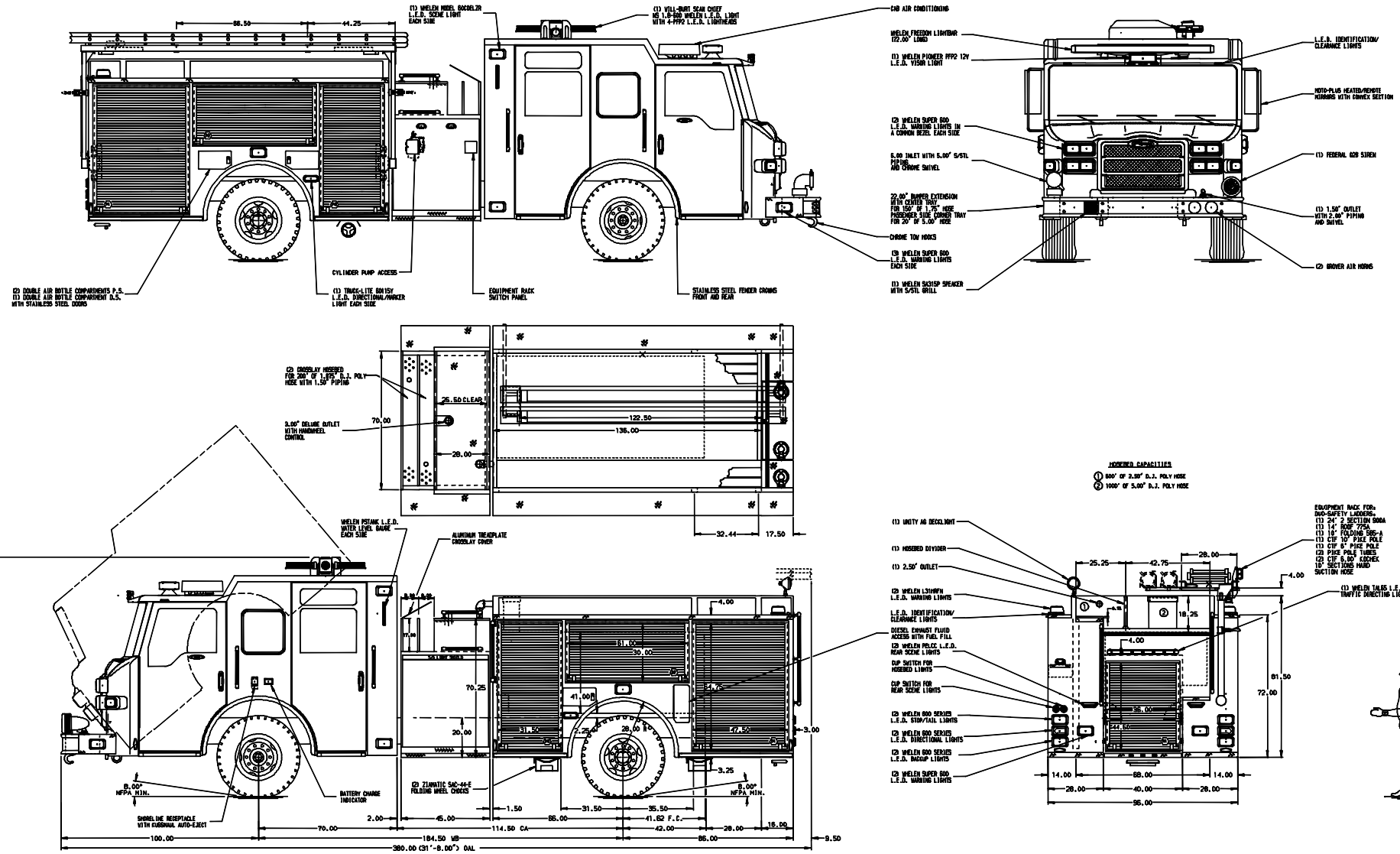

ALUMINUM BODY

NOTE

DIMENSIONS SHOWN ARE APPROXIMATE AND ARE SUBJECT TO MINOR DEVIATIONS AS MAY OCCUR OR BE NECESSARY IN CONSTRUCTION.
MINOR DETAILS NOT SHOWN.

1. ALUMINUM TREADPLATE EXTERIOR REAR WALL OF CAB
2. MOUNTING BASE FOR ANTENNA LOCATED PER SHOP ORDER
3. PERIMETER SCENE LIGHTS LOCATED PER SHOP ORDER
4. PIERCE L.E.D. DUAL COMPARTMENT LIGHT STRIPS LOCATED PER SHOP ORDER
5. PAINTED SHELF TRACKS LOCATED IN COMPARTMENTS D1,D2,D3,P1,P2,P3
6. ONE FULL WIDTH/DEPTH PAINTED ADJUSTABLE SHELF IN COMPARTMENTS P1,P2,R1, TWO IN D1,P3
7. ONE FLOOR MOUNTED SLIDE-OUT TRAY IN COMPARTMENTS P1,R1
8. ALL FOLDING STEPS TO BE TRIDENT WITH INTEGRATED L.E.D. LIGHT UNLESS SPECIFIED
9. AIR INLET WITH DISCONNECT COUPLING IN D.S. STEP WELL
10. ONE 4-PLASE 120V DUPLEX RECEPTACLE LOCATED IN RH3 COMPARTMENT
11. BATTERY CHARGER LOCATED IN COMPARTMENT D5
12. ONE ADJUSTABLE SLIDE-OUT TRAY LOCATED IN D2
13. TWO SLIDE-OUT ALUMINUM PEDBOARDS LOCATED IN COMPARTMENT D3

CUSTOMER APPROVAL

APPROVED BY: _____

DATE:

REV	DATE	BY	CH	
7	18DEC14	JWD	AWG	CHASSIS DATA
6	19SEP14	JLS	AWG	MAKE
5	22AUG14	JWD	AWG	PIERCE
4	21AUG14	JWD	AWG	MODEL
				IMPEL

Pierce MANUFACTURING INC.

TITLE	1250-D-750P, 152", FULL HEIGHT, FDLER D.S. & P.S. (2) X-LAYS, DELUGE, LIGHT TOWER
FOR	CITY OF DEBARY DEBARY, FLORIDA
DWG NO.	27994AD

JOB NO.	27994
SCALE	1:24
DATE	
DRAWN BY	JWO 03JUN14
CHECKED BY	MNE 05JUN14
SHEET SIZE	D
SHEET NO.	1 OF 1

View File Created 19-DEC-2014 08:24:48