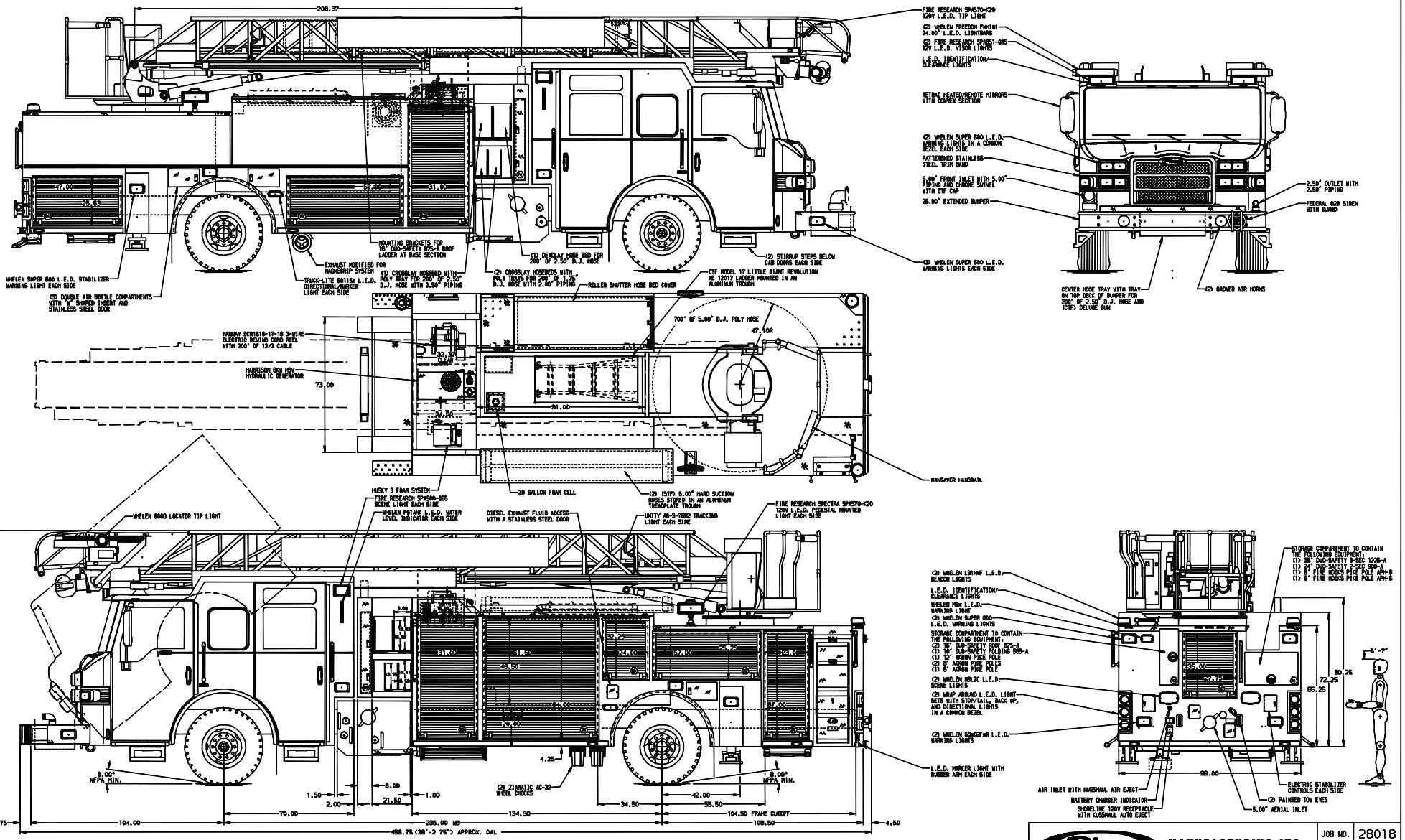

ALUMINUM BODY

MAXIMUM O.A.H. 139.00"

NOTE

DIMENSIONS SHOWN ARE APPROXIMATE AND ARE SUBJECT TO MINOR DEVIATIONS AS MAY OCCUR OR BE NECESSARY IN CONSTRUCTION.
MINOR DETAILS NOT SHOWN.

1. POLISHED STAINLESS STEEL SCUFFPLATE ON EACH CAB DOOR JAMB
2. ANTENNA WITH MOUNTING BASE LOCATED PER SHOP ORDER
3. BATTERY CHARGER/AIR COMPRESSOR LOCATED BEHIND DRIVER SEAT
4. PERIMETER SCENE LIGHTS LOCATED PER SHOP ORDER
5. ARCOR LUMINAR 1GP AY-8500-040 40.00" L.E.D. HOSE BED LIGHTS
6. ARCOR L.E.D. COMPARTMENT LIGHTS LOCATED IN ALL SPECIFIED BODY COMPARTMENTS
7. 500 LB. FULL WIDTH/DEPTH SHELVES WITH 2" SIDES IN COMPARTMENT-ONE IN D1,TWO IN D4, THREE IN P3
8. 500 LB. FLOOR MOUNTED SLIDE-OUT TRAYS WITH 2" SIDES IN COMPARTMENT-P1,P2
9. SWING OUT TOOL GRID SYSTEM IN COMPARTMENT-D2
10. TWO ADDITIONAL POLY TRAYS SHIPPED LOOSE
11. TRIDENT FOLDING STEPS MOUNTED ON THE AERIAL DEVICE PER SHOP ORDER
12. 14.00" AERIAL LIMITED RETRACTION
13. MOUNTING BRACKETS AT THE AERIAL FLY SECTION FOR 12' FIRE HOOKS PIKE POLE
14. MOUNTING BRACKETS AT THE AERIAL FLY SECTION FOR (1) AXE
15. REMOTE LADDER CONTROLS AT AERIAL TIP
16. TECHNO L.E.D. RUNG STYLE LIGHTING ON AERIAL LADDER SECTIONS
17. 110V POWER TO AERIAL TIP
18. FIRE RESEARCH 3-WAY INTERCOM SYSTEM BETWEEN PUMP PANEL, TURNTABLE, AND PLATFORM
19. AERIAL PEDESTAL RAISED 1.50"
20. LIFTING EYE RESCUE ATTACHMENT AT AERIAL TIP
21. TWO ADDITIONAL POLY TRAY SHIPPED LOOSE
22. CIRCUIT BREAKER PANEL LOCATED IN COMPARTMENT-D3

REV	DATE	BY	CH
1	05AUG14	BST	SHE
2	10JUL14	BST	SHE

CHASSIS DATA
MAKE: PIERCE
MODEL: IMPEL FR

Pierce MANUFACTURING INC.

TITLE: 75' HAL TCO AERIAL LADDER AND BODY ASSEMBLY
500 GALLON TANK-470 GAL. WATER/30 GAL. FOAM

FOR: CALEDONIA FIRE DISTRICT
CALEDONIA, NY

DWG NO. 28018AD

JOB NO. 28018
SCALE 1:24
DATE
DRAWN BY BST 13MAY14
CHECKED BY GRM 19MAY14
SHEET SIZE D
SHEET NO. 1 OF 1

View File Created 05-AUG-2014 10:22:31