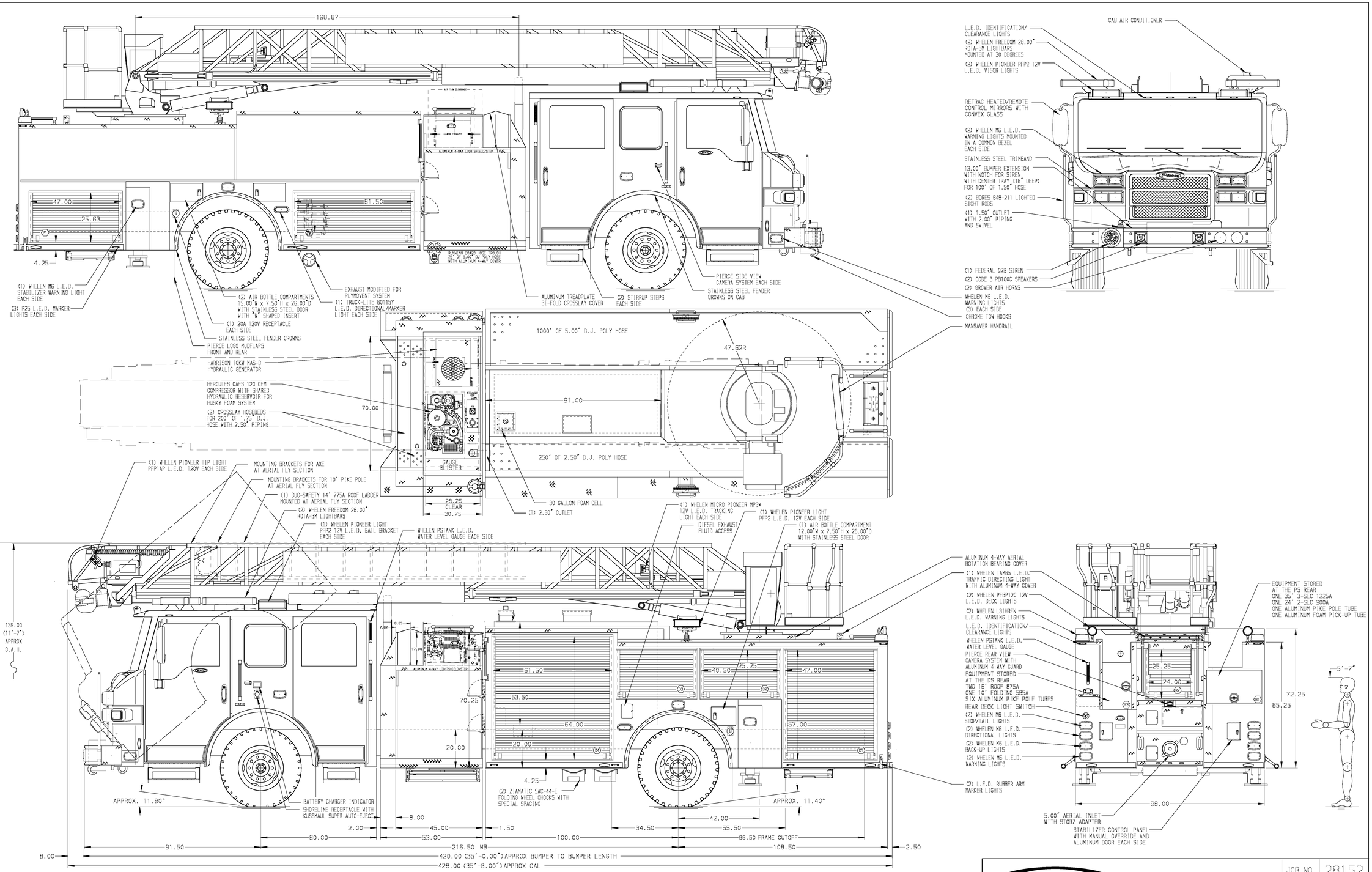

ALUMINUM BODY | MAXIMUM O.A.L. 428.00" | MAXIMUM O.A.H. 144" | SIDE ROLL AND FRONTAL IMPACT PROTECTION

NOTE

DIMENSIONS SHOWN ARE APPROXIMATE AND ARE SUBJECT TO MINOR DEVIATIONS AS MAY OCCUR OR BE NECESSARY IN CONSTRUCTION.
MINOR DETAILS NOT SHOWN.

1. PUMP PANEL DRAWING REQUIRED
2. ONSPOT AUTOMATIC TIRE CHAINS TO BE PROVIDED AT REAR
3. VOGEL LUBE SYSTEM PUMP LOCATED PER SHOP ORDER
4. ALUMINUM TREADPLATE EXTERIOR REAR WALL OF CAB WITH FULL COVERAGE
5. ALUMINUM 4-WAY ON CAB ROOF
6. MOUNTING BASE FOR ANTENNA LOCATED PER SHOP ORDER
7. BATTERY CHARGER LOCATED BEHIND DRIVER SEAT
8. ONE ADJUSTABLE FULL WIDTH/FULL DEPTH SHELF IN COMPARTMENT D1,P2,TWO IN D4
9. ONE ALUMINUM VERTICAL DIVIDER IN COMPARTMENT P2
10. TURTLE TILE MATTING WITH RAMP IN COMPARTMENT D2,D3,P1,P2,R2
11. TURTLE TILE MATTING ON SHELF/TRAY IN COMPARTMENT PER SHOP ORDER
12. ONE FLOOR MOUNTED SLIDE-OUT TRAY WITH 2.00" SIDES AND 500 LB CAPACITY IN COMPARTMENT D1,D4
13. CIRCUIT BREAKER PANEL IN COMPARTMENT D4
14. ONE HANNAY ELECTRIC REWIND CORD REEL MODEL 1614-17-18 LOCATED IN COMPARTMENT P2 WITH 100' OF 10/3 CABLE WITH CAPTIVE ROLLER ASSEMBLY
15. AERIAL DEVICE STEPS TO BE TRIDENT WITH INTEGRATED L.E.D. LIGHT
16. L.E.D. LIGHTING ON AERIAL LADDER SECTIONS
17. 120V POWER TO AERIAL TIP
18. ATKINSON 3-WAY INTERCOM SYSTEM BETWEEN AERIAL TIP, TURNTABLE AND PUMP PANEL
19. AERIAL PEDESTAL RAISED 1.50"
20. LIFTING EYE RESCUE ATTACHMENT AT AERIAL TIP
21. COLLISION AVOIDANCE CONTROL SYSTEM ON AERIAL DEVICE
22. 1500 GPM HIGH FLOW WATERWAY
23. AIR INLET WITH DISCONNECT COUPLING LOCATED AT DRIVER SIDE STEP WELL OF CAB
24. ONE 15A 120V 6-PLACE SHORELINE RECEPTACLE STRIP LOCATED IN CAB PER SHOP ORDER
25. L.E.D. PERIMETER SCENE LIGHTS LOCATED PER SHOP ORDER
26. ROM V4 L.E.D. DUAL LIGHT STRIPS LOCATED IN COMPARTMENT D1,D2,D3,D4,R1,R2,R3,P1,P2
27. ALL FOLDING STEPS TO BE TRIDENT WITH INTEGRATED L.E.D. LIGHT UNLESS SPECIFIED
28. 5/STL SCUFFPLATE AT EACH CAB DOOR JAMB
29. 7.00" SHORTENED AERIAL EGRESS AND 6.00" SHORTENED COIL CORD TROUGH

REV	DATE	BY	CH
V	08MAY15	JGA	DTS
V	13NOV14	JGA	DTS
V	15OCT14	JGA	DTS
V	08AUG14	JGA	JBL

CHASSIS DATA: MAKE PIERCE; MODEL VELOCITY

Pierce MANUFACTURING INC.

TITLE: 75 AERIAL LADDER & BODY ASSEMBLY
500 GALLON TANK, 470 GAL WATER, 30 GAL FOAM

FOR: CRANBERRY TOWNSHIP V.F.C.
CRANBERRY TOWNSHIP, PA, USA

DWG NO.: 28152AD

JOB NO.	28152
SCALE 1:24	DATE
DRAWN BY JGA	28JUL14
CHECKED BY GRM	30JUL14
SHEET SIZE D	SHEET NO. 1 OF 1

View File Created 08-MAY-2015 12:09:15