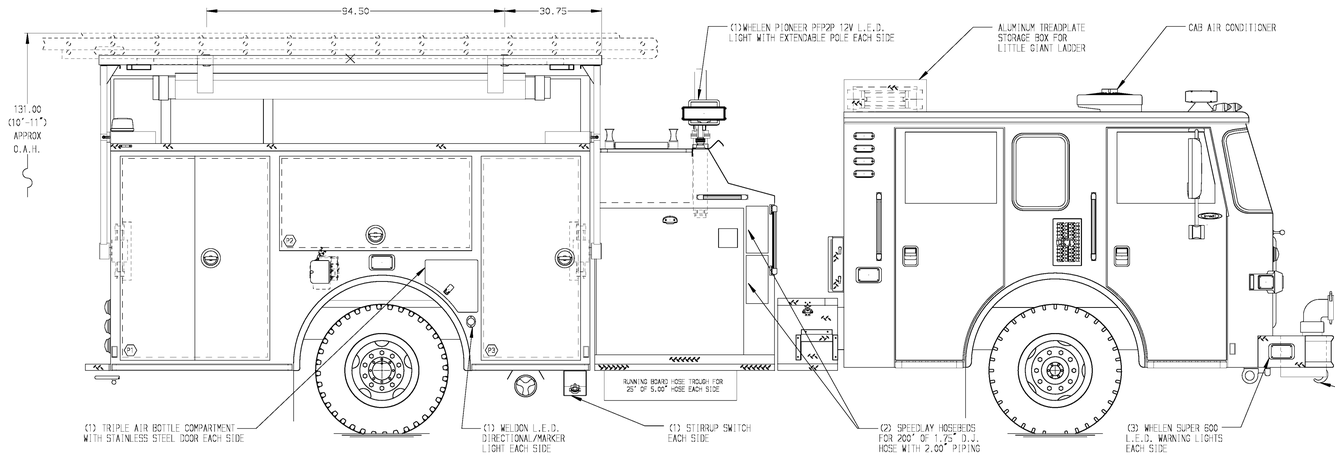

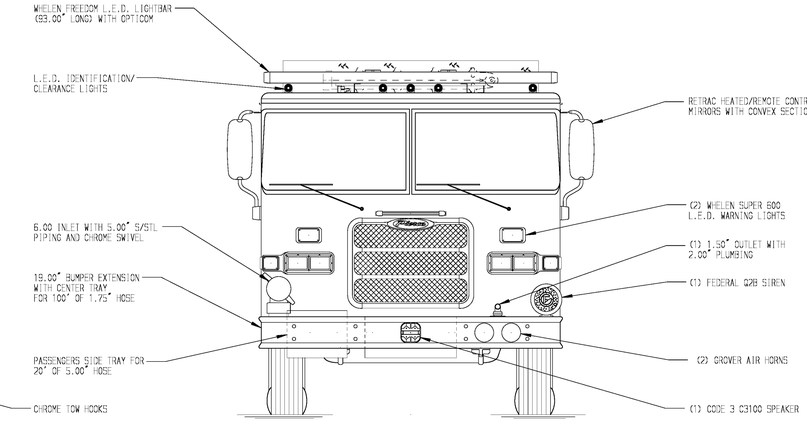

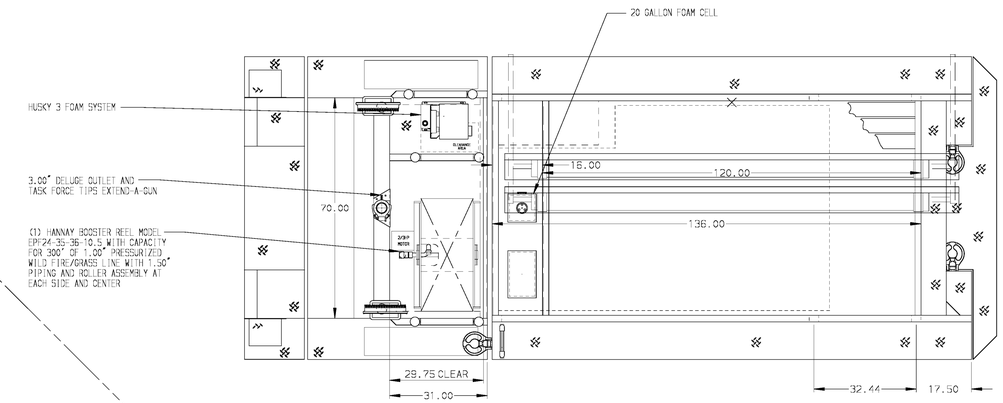

HOSEBED CAPACITIES

1. 250' OF 2.50" D.J. POLY HOSE
2. 500' OF 3.00" D.J. POLY HOSE
3. 1000' OF 5.00" D.J. POLY HOSE
4. (2) 100' BUNDLES OF 1.75" D.J. POLY HOSE IN CTF TRAY
5. (2) 50' BUNDLES OF 2.50" D.J. POLY HOSE IN CTF TRAY

(POLY TRAYS ARE TO BE 6.00"H X 9.75"W X 115"L CLEAR DIMENSIONS)

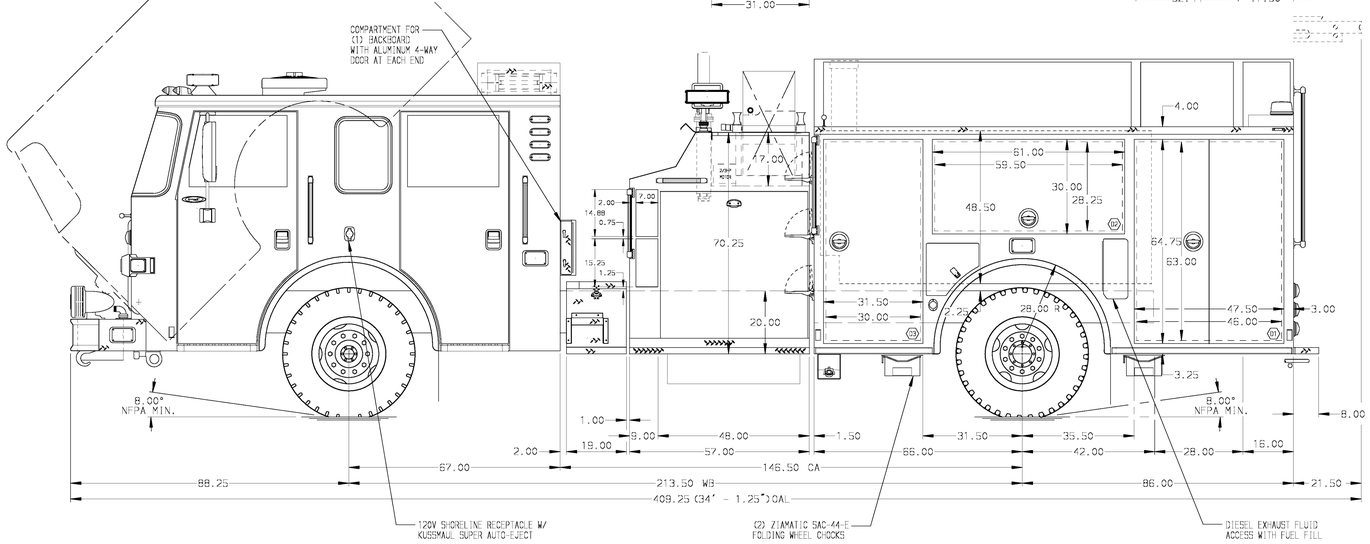

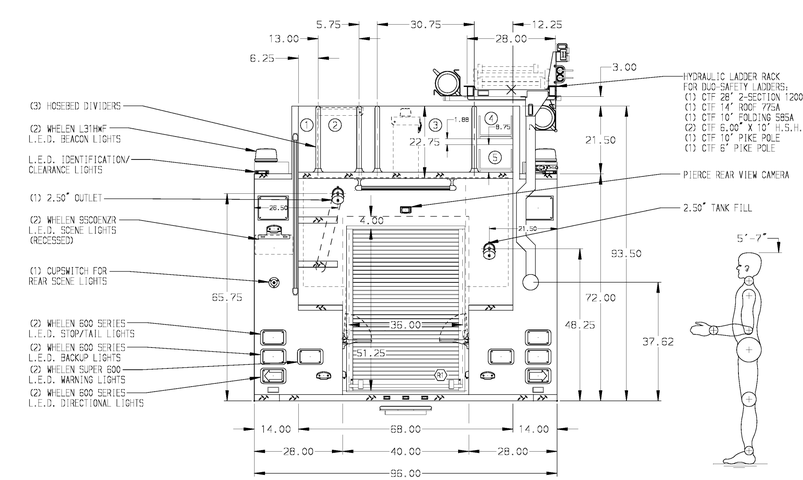

ALUMINUM BODY

NOTE

DIMENSIONS SHOWN ARE APPROXIMATE AND ARE SUBJECT TO MINOR DEVIATIONS AS MAY OCCUR OR BE NECESSARY IN CONSTRUCTION.
MINOR DETAILS NOT SHOWN.

1. INSTA-CHAIN AUTOMATIC TIRE CHAINS TO BE PROVIDED AT REAR
2. ALUMINUM TREADPLATE EXTERIOR REAR WALL OF CAB
3. S/STL SCUFFPLATE ON EACH CAB DOOR JAMB
4. S/STL SCUFFPLATE ON REAR OUTER CORNERS OF CAB
5. BATTERY CHARGER LOCATED IN COMPARTMENT D3
6. BATTERY CHARGE INDICATOR LOCATED NEAR D.S. SEAT RISER WITH BRACKET
7. S/STL SCUFFPLATE ON REAR OUTER CORNER OF BODY
8. REVERSED HINGED DOOR ON COMPARTMENTS D3 & P3
9. S/STL SCUFFPLATE ON BOTTOM EDGE OF DOOR FRAMING OF ALL SIDE BODY COMPARTMENTS
10. PIERCE L.E.D. DUAL COMPARTMENT LIGHT STRIPS LOCATED PER SHOP ORDER
11. PAINTED SHELF TRACKS LOCATED IN EACH BODY COMPARTMENT
12. TWO ADJUSTABLE SHELFS (FULL DEPTH/FULL WIDTH) IN COMPARTMENT D1, THREE IN D3
13. ONE FLOOR MOUNTED SLIDE-OUT TRAY (FULL DEPTH/FULL WIDTH) IN COMPARTMENT D1, P1, P3 & R1
14. ONE ADJUSTABLE TILTING SLIDE-OUT TRAY (42" DEEP) IN COMPARTMENT P3
15. PARTITION BETWEEN COMPARTMENTS D1/R1 AND P1/R1
16. ALUMINUM PEGBOARD WITH TRACKS ON THE REAR WALL OF COMPARTMENT P2
17. ALL FOLDING STEPS TO BE TRIDENT WITH INTEGRATED L.E.D. LIGHT UNLESS SPECIFIED
18. PIERCE LOGO MUDFLAPS FRONT AND REAR
19. S/STL FENDER CROWNS FRONT AND REAR
20. ONE 12V DUPLEX RECEPTACLE LOCATED ON UPPER REAR WALL OF EMS CABINET
21. PERIMETER SCENE LIGHTS LOCATED PER SHOP ORDER
22. ONE ADJUSTBLE SLIDE OUT TRAY LOCATED IN COMPARTMENT P3 & R1
23. MOUNTING BASES FOR ANTENNAS LOCATED PER SHOP ORDER
24. S.STL SCUFFPLATE LOCATED IN REAR INSIDE EDGE OF BODY
25. MOUNTING PROVISIONS FOR FUTURE INSTALLATION OF HYDRAULIC REELS IN COMPARTMENT R1
26. CUTOUT IN PARTITION BETWEEN COMPARTMENTS P1 & P2
27. ZICO MODEL UH-B-30-3-SF AIR BOTTLE HOLDER FOR (2) AIR BOTTLES MOUNTED IN COMPARTMENT D2

REV	DATE	BY	CH
7	16JAN15	AMI	PJP
6	23DEC14	AMI	PJP
5	14NOV14	AMI	PJP
4	01OCT14	COL	CSH

CHASSIS DATA	
MAKE	PIERCE
MODEL	ARROW XT
DWG NO.	28153AD

Pierce MANUFACTURING INC.

TITLE	1500-D-1000 GAL POLY W/20 GAL FOAM CELL, 152" PUMPER (2)SPEEDLAYS, DELUGE, BOOSTER REEL, HYD. LADDER RACK
FOR	KUNA RURAL FIRE DISTRICT KUNA, IDAHO

JOB NO.	28153
SCALE 1:24	DATE
DRAWN BY COL	20SEP14
CHECKED BY THI	23SEP14
SHEET SIZE D	SHEET NO. 1 OF 1

View File Created 16-JAN-2015 09:30:04