PASSENGER'S SIDE COMPARTMENTS CONTAIN THE FOLLOWING:

COMPARTMENT P1 CONTAINS:
- (1) STD DEPTH ADJ SHELF
- (1) STD DEPTH ADJ SLIDE OUT/TILT TRAY
- (1) STD DEPTH FLOOR MOUNTED TRAY
- (2) HYDRAULIC REELS W/100' OF DUAL HOSE
- (1) 20A,240V T.L. RECEPTACLE
-
-

COMPARTMENT P2 CONTAINS:
- (1) 1/2 DEPTH ADJ SLIDE OUT/TILT TRAY
- (1) 1/2 DEPTH FLOOR MOUNTED TRAY
-
-

COMPARTMENT P3 CONTAINS:
- (1) RACK FOR LITTLE GIANT LADDER
- (1) 1/2 DEPTH ADJ SLIDE OUT/TILT TRAY
- (1) VERTICAL COMPARTMENT DIVIDER
- (1) 1/2 DEPTH ADJ SLIDE OUT TRAY
- (1) STD DEPTH FLOOR MOUNTED TRAY
-
-

COMPARTMENT P4 CONTAINS:
- (1) HORIZONTAL FLOOR EXTENSION
- (1) 1/2 DEPTH ADJ SLIDE OUT TOOLBOARD
- (1) VERTICAL COMPARTMENT DIVIDER
- (1) 1/2 DEPTH ADJ SLIDE OUT/TILT TRAY
- (1) RACK FOR 3 STOKES BASKETS
- (1) RACK FOR BACKBOARD
- (1) ELECTRIC CORD REEL WITH 200' OF 10/3 BLACK CORD
- (1) HYDRAULIC REEL W/100' OF DUAL HOSE
- (1) 1/2 DEPTH ADJ SHELF
-

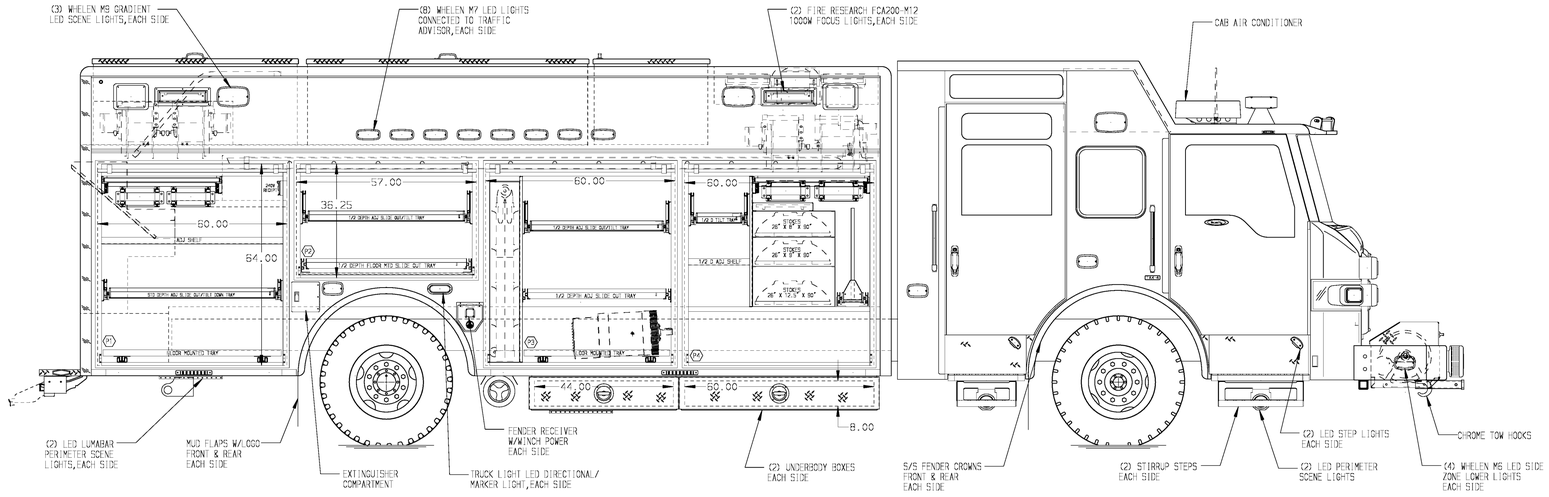

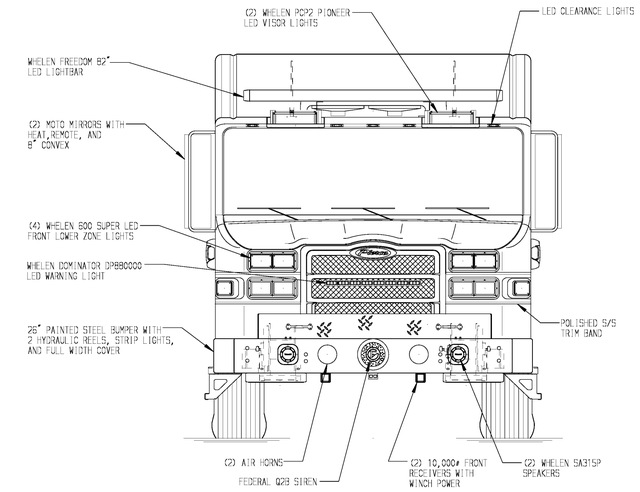

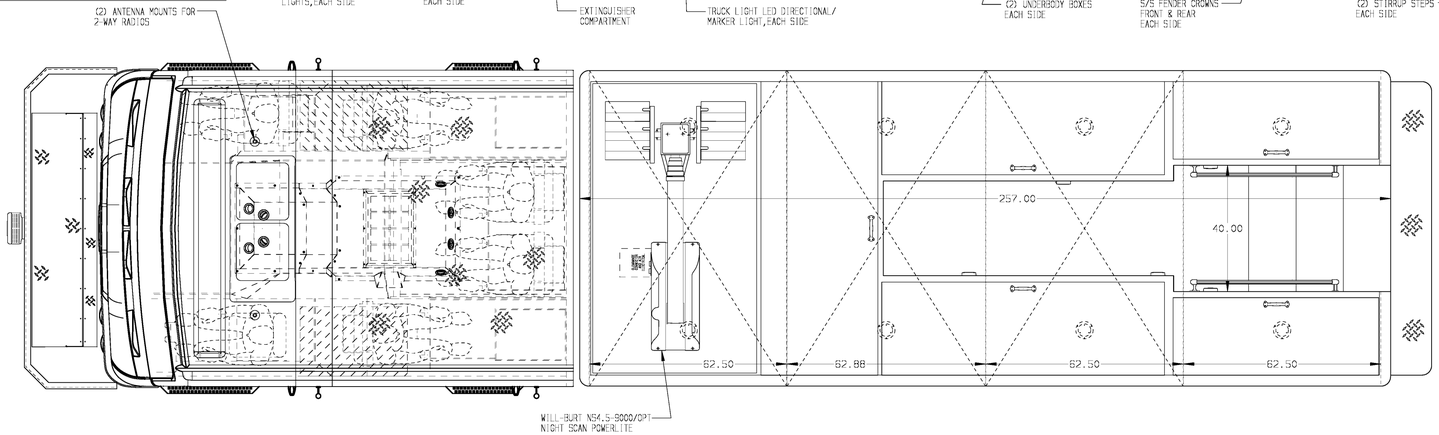

REAR COMPARTMENT CONTAINS THE FOLLOWING:

COMPARTMENT R1 CONTAINS:
- (1) SPECIAL FLOOR MOUNTED TRAY FOR WINCH STORAGE
-

COMPARTMENT R2 CONTAINS:
- (1) ADJ SLIDE OUT TRAY
-
-

COMPARTMENT R3 CONTAINS:
- (1) RACK FOR 16' ROOF LADDER
- (1) RACK FOR 4 PIKE POLES
- (1) 10' FOLDING LADDER
-
-
-

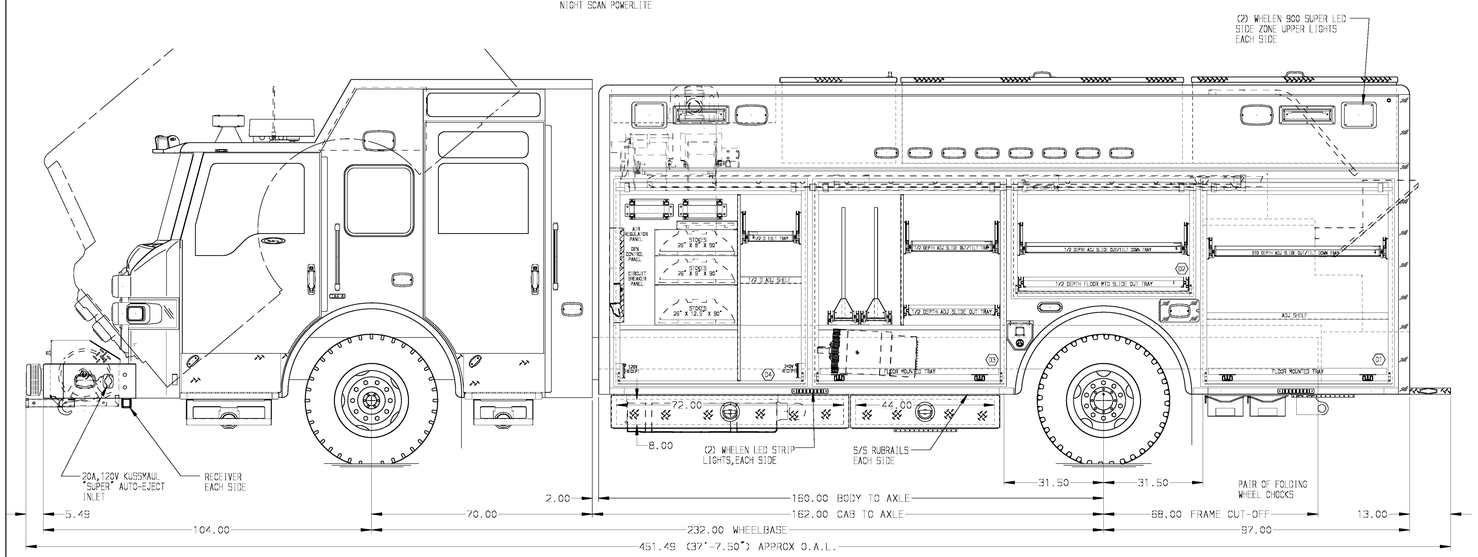

DRIVER'S SIDE COMPARTMENTS CONTAIN THE FOLLOWING:

COMPARTMENT D1 CONTAINS:
- (1) STD DEPTH ADJ SHELF
- (1) STD DEPTH FLOOR MOUNTED TRAY
- (1) STD DEPTH ADJ SLIDE OUT/TILT TRAY
-
-

COMPARTMENT D2 CONTAINS:
- (1) 1/2 DEPTH ADJ SLIDE OUT/TILT TRAY
- (1) 1/2 DEPTH FLOOR MOUNTED TRAY
-
-

COMPARTMENT D3 CONTAINS:
- (1) HORIZONTAL FLOOR EXTENSION
- (2) 1/2 DEPTH ADJ SLIDE OUT TOOLBOARDS
- (1) VERTICAL COMPARTMENT DIVIDER
- (1) 1/2 DEPTH ADJ SLIDE OUT/TILT TRAY
- (1) STD DEPTH FLOOR MOUNTED TRAY
- (1) 1/2 DEPTH ADJ SLIDE OUT TRAY
-
-

COMPARTMENT D4 CONTAINS:
- (1) HORIZONTAL FLOOR EXTENSION
- (1) VERTICAL COMPARTMENT DIVIDER
- (1) 1/2 DEPTH ADJ SLIDE OUT/TILT TRAY
- (1) RACK FOR 3 STOKES BASKETS
- (1) 1/2 DEPTH ADJ SHELF
- (1) NIGHT SCAN CONTROLLER
- (1) ELECTRIC CORD REEL WITH 200' OF 10/3 BLACK CORD
- (1) 30A,240V RECEPTACLE
- (1) 50A,240V RECEPTACLE
- (1) LOW PRESSURE AIR REEL W/150' OF HOSE
- (1) TOOL AIR GUAGE AND REGULATOR
- (1) CIRCUIT BREAKER PANEL
- (1) GENERATOR METER PANEL
-
-

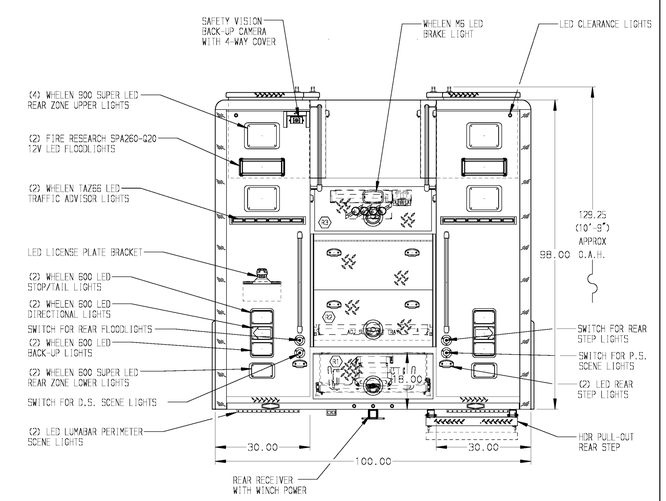

NOTE

DIMENSIONS SHOWN ARE APPROXIMATE AND ARE SUBJECT TO MINOR DEVIATIONS AS MAY OCCUR OR BE NECESSARY IN CONSTRUCTION.
MINOR DETAILS NOT SHOWN.

NOTES:
1. ONSPOT AUTOMATIC TIRE CHAINS
2. KUSSMAUL AIR BRAKE COMPRESSOR LOCATED BEHIND THE DRIVER'S SEAT
3. RAMSEY/QUMSOOD PORTABLE RECEIVER STYLE WINCH
4. POLISHED S/S SCUFFPLATES ON CAB DOOR JAMBS
5. ALUMINUM TREADPLATE ON CAB ROOF
6. FLOOR IN CAB AND CREW CAB TO BE PADDED RUBBER
7. SIGTRONICS 6-POSITION INTERCOM SYSTEM
8. KUSSMAUL 3 CHARGER LOCATED IN SEAT BOX
9. BATTERY CHARGE INDICATOR LOCATED ON DRIVER'S SEAT
10. BRUSHED S/S REAR BODY CORNERS
11. S/S SCUFFPLATE AROUND FUEL/DEF FILL OPENING
12. S/S GUARDS ON ALL ROLL-UP DOORS
13. PIERCE DUAL LED STRIP LIGHTS IN EACH BODY AND HATCH COMPARTMENT
14. ADDITIONAL 6" LIGHT IN EACH BODY COMPARTMENT
15. TURTLE TILE MATTING ON COMPARTMENT/HATCH COMPARTMENT FLOORS,AND SHELVES AND TRAYS INCLUDING BUMPER TRAY
16. ONAN 25kW SINGLE PHASE PTO DRIVEN GENERATOR WITH SPLASH GUARD LOCATED BETWEEN THE FRAME RAILS

SIDE ROLL AND FRONTAL IMPACT PROTECTION

REV	DATE	BY	CH
V	06APR15	DHE	CDK
V	25FEB15	DHE	CDK
V	23DEC14	EWI	CDK

CHASSIS DATA
MAKE: PIERCE
MODEL: VXFR7020
DWG NO.: 28312AD

Pierce MANUFACTURING INC.

TITLE: HEAVY DUTY RESCUE NON-WALKIN
FOR: PINECROFT-SEDGEFIELD F.D. GREENSBORO, NC

JOB NO.	28312
SCALE	1:24
DATE	
DRAWN BY	DHE
DATE	03DEC14
CHECKED BY	CDK
DATE	10DEC14
SHEET SIZE	D
SHEET NO.	1 OF 1

View File Created 07-APR-2015 12:09:43