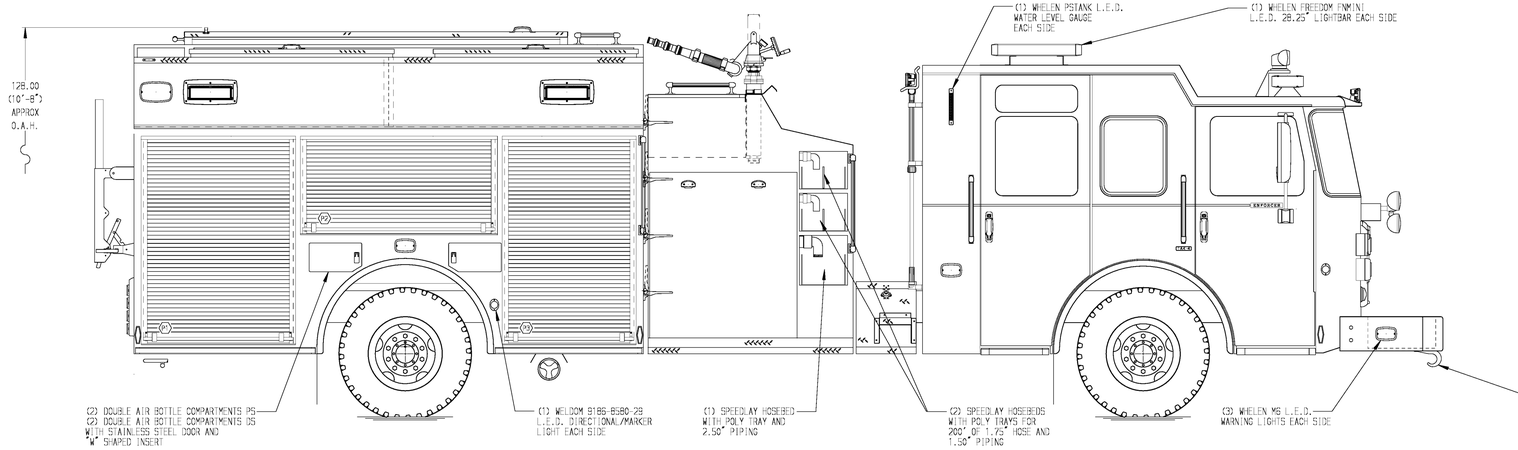

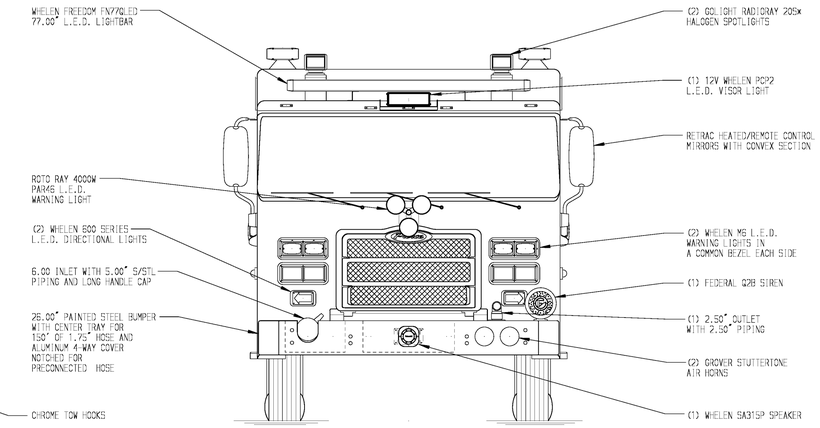

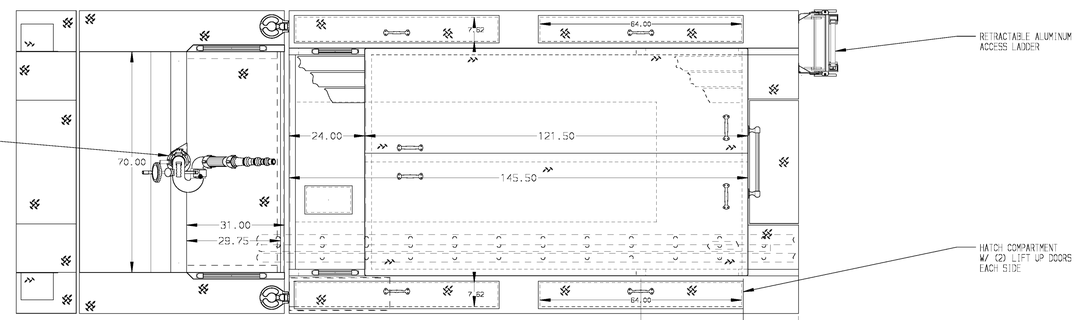

HOSEBED CAPACITIES
1. 1000' OF 5.00" D.J. POLY HOSE
2. 1200' OF 3.00" D.J. POLY HOSE
3. 200' OF 3.00" D.J. POLY HOSE

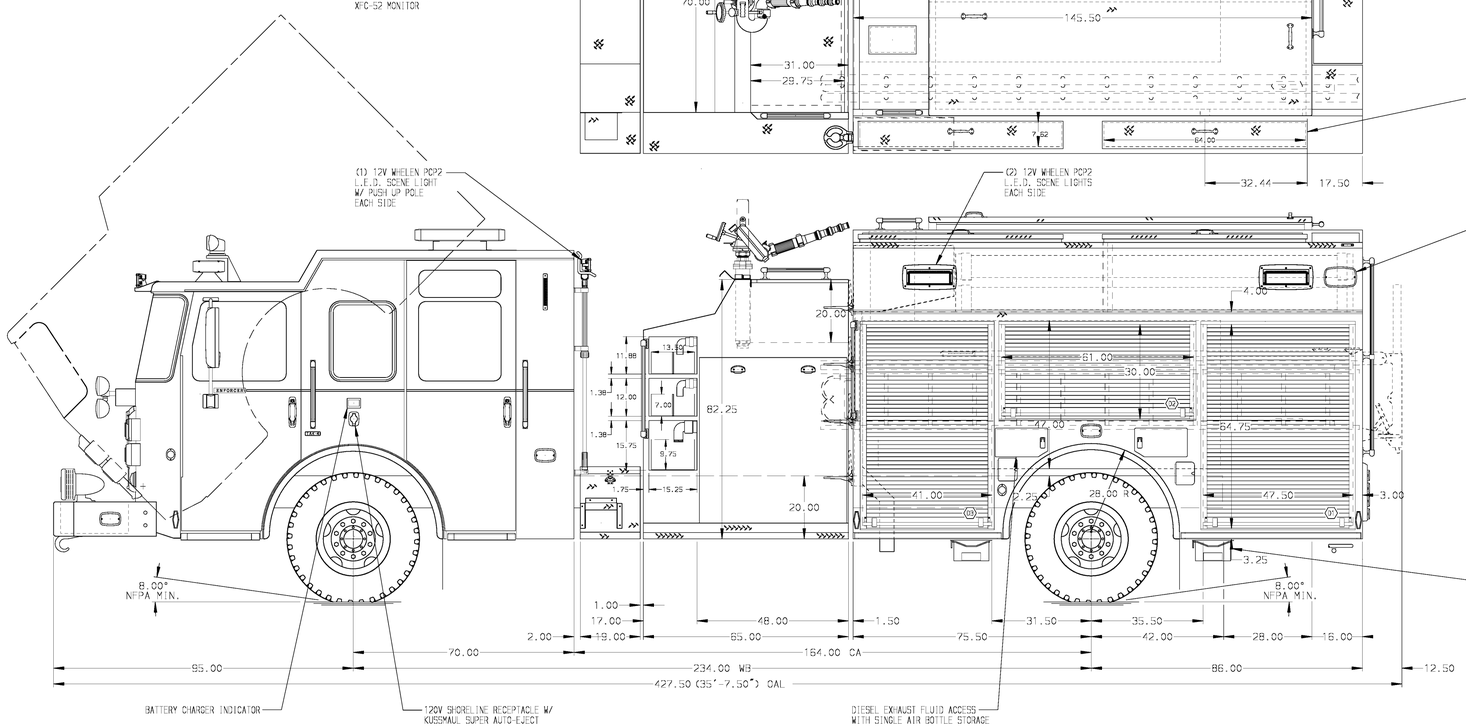

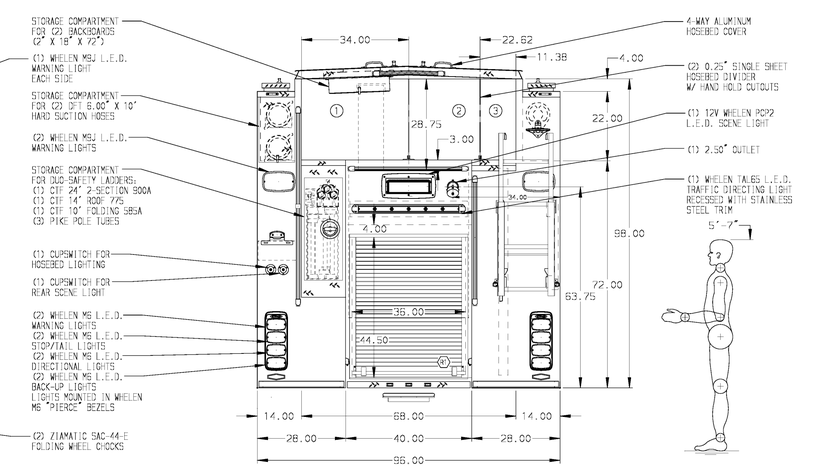

ALUMINUM BODY

SIDE ROLL PROTECTION

NOTE

DIMENSIONS SHOWN ARE APPROXIMATE AND ARE SUBJECT TO MINOR DEVIATIONS AS MAY OCCUR OR BE NECESSARY IN CONSTRUCTION.
MINOR DETAILS NOT SHOWN.

1. WIRING FOR AUTOMATIC TIRE CHAINS
2. S/STL SCUFFPLATE ON EACH CAB DOOR JAMB
3. MOUNTING BASE FOR ANTENNA LOCATED PER SHOP ORDER
4. BATTERY CHARGER/AIR COMPRESSOR LOCATED BEHIND DRIVERS SEAT
5. PERIMETER SCENE LIGHTS LOCATED PER SHOP ORDER
6. FOUR WHELEN 01-0660058-00 12V L.E.D. LIGHTS LOCATED IN THE HOSE BED
7. AMDOR LUMABAR H20 AY-9500-040 40.00" L.E.D. HOSE BED LIGHTS
8. PULL STRAPS FOR DOORS IN EACH SIDE BODY COMPARTMENT
9. S/STL PROTECTIVE GUARD FOR ROLL-UP DOOR IN EACH BODY COMPARTMENT
10. PIERCE L.E.D. DUAL COMPARTMENT LIGHT STRIPS LOCATED PER SHOP ORDER
11. PAINTED SHELF TRACKS LOCATED IN EACH BODY COMPARTMENT
12. ONE FULL WIDTH/DEPTH PAINTED ADJUSTABLE SHELF IN EACH BODY COMPARTMENT
13. ONE FLOOR MOUNTED SLIDE-OUT TRAY IN COMPARTMENTS D1, D3, P1, P3, & R1
14. PIERCE LOGO MUDFLAPS FRONT AND REAR
15. ALL FOLDING STEPS TO BE TRIDENT WITH INTEGRATED L.E.D. LIGHT UNLESS SPECIFIED
16. S/STL FENDER CROWNS FRONT AND REAR
17. OIL DRY HOPPER LOCATED IN DS HATCH COMPARTMENT

REV	DATE	BY	CH
▽	20JAN15	COL	COR
▽	02DEC14	COL	COR

CHASSIS DATA
MAKE: PIERCE
MODEL: ENFORCER

Pierce MANUFACTURING INC.

TITLE: 1500-D-750 GAL POLY, 161" BODY - DS FDLER, PS FH-FD (3) SPEEDLAYS, DELUGE, LADDERS BESIDE TANK

FOR: HUTCHINSON FIRE DEPARTMENT
HUTCHINSON, KANSAS

DWG NO.: 28378AD

JOB NO.	28378
SCALE 1:24	DATE
DRAWN BY COL	31OCT14
CHECKED BY GRM	31OCT14
SHEET SIZE D	SHEET NO. 1 OF 1

View File Created 20-JAN-2015 12:35:29