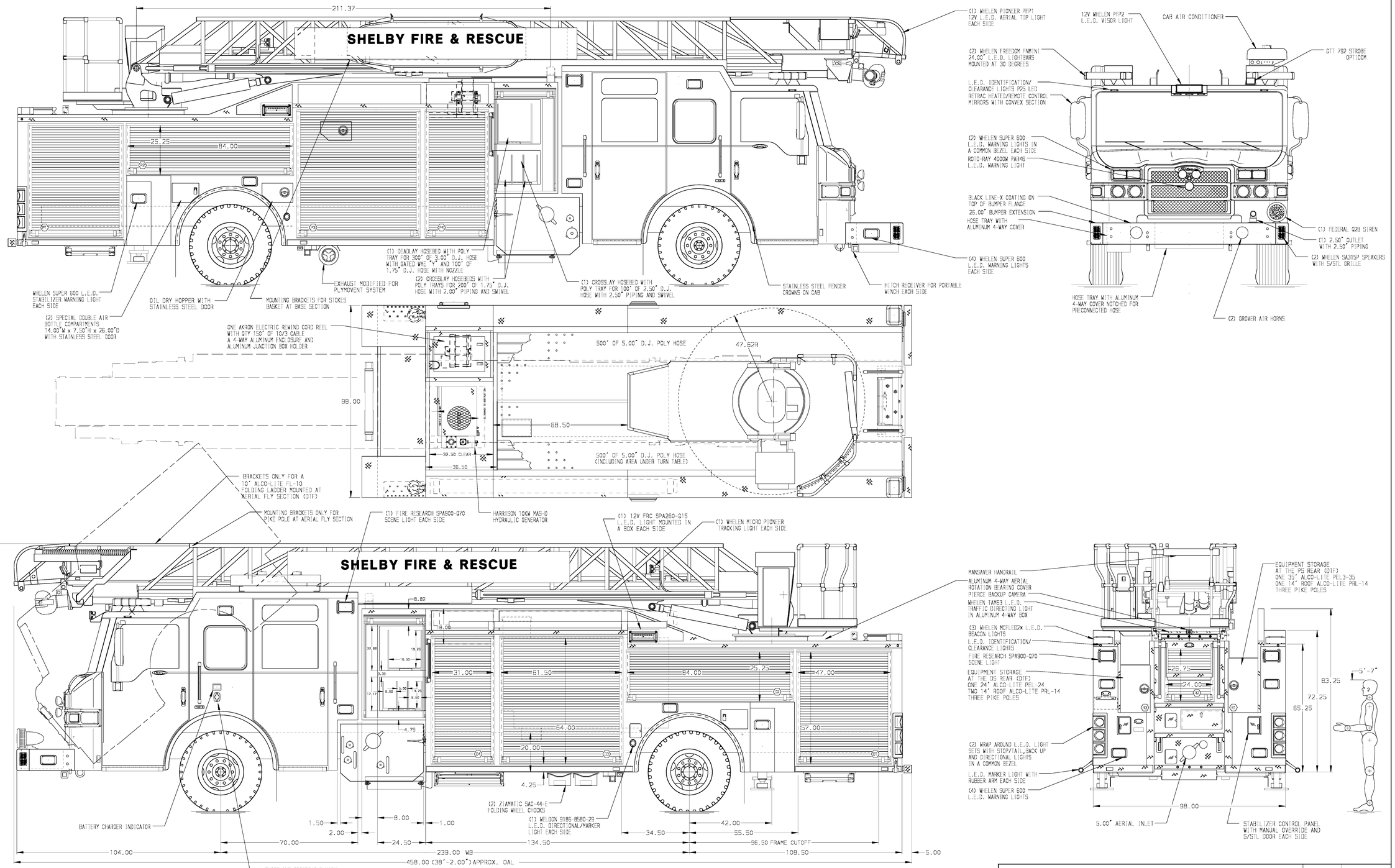

ALUMINUM BODY

SIDE ROLL AND FRONTAL IMPACT PROTECTION

NOTE

DIMENSIONS SHOWN ARE APPROXIMATE AND ARE SUBJECT TO MINOR DEVIATIONS AS MAY OCCUR OR BE NECESSARY IN CONSTRUCTION.
MINOR DETAILS NOT SHOWN.

1. ALUMINUM TREADPLATE EXTERIOR REAR WALL OF CAB
2. S/STL SCUFFPLATE ON EACH CAB DOOR JAMB
3. ONE AIR INLET/OUTLET WITH DISCONNECT FITTING LOCATED AT DRIVER SIDE PUMP PANEL
4. MOUNTING BASE FOR ANTENNA LOCATED PER SHOP ORDER
5. BATTERY CHARGER LOCATED BEHIND DRIVER'S SEAT
6. 1500 GPM HIGH FLOW WATERWAY
7. ONE 12V L.E.D. LIGHT STRIP LOCATED ON EACH SIDE IN THE HOSEBED
8. ALUMINUM PEGBOARD WITH TRACKS ON THE REAR WALL OF COMPARTMENT D2,D3,P2,P4
9. ONE ADJUSTABLE FULL WIDTH/FULL DEPTH SHELF IN COMPARTMENT D1,D3,P1,P3
10. ONE FLOOR MOUNTED SLIDE-OUT TRAY IN COMPARTMENT D1,P3
11. ONSPOT AUTOMATIC TIRE CHAINS TO BE PROVIDED AT REAR
12. PIERCE L.E.D. COMPARTMENT LIGHT STRIPS LOCATED PER SHOP ORDER
13. LIFTING EYE RESCUE ATTACHMENT AT AERIAL TIP
14. CIRCUIT BREAKER PANEL IN COMPARTMENT D3
15. LYFEPULLEY RESCUE SYSTEM AT AERIAL TIP
16. FOUR TRIDENT FOLDING STEPS MOUNTED ON AERIAL DEVICE PER SHOP ORDER
17. AERIAL PEDESTAL RAISED 1.50"
18. L.E.D. LIGHTING ON AERIAL LADDER SECTIONS
19. 120V POWER TO AERIAL TIP
20. FIRE RESEARCH 3-WAY INTERCOM SYSTEM BETWEEN AERIAL TIP,PUMP PANEL & TURNTABLE
21. PERIMETER SCENE LIGHTS LOCATED PER SHOP ORDER
22. 2" LIMITED RETRACTION

REV	DATE	BY	CH
V	23MAR15	RPA	TWH
V	26FEB15	RPA	TWH
V	08JAN15	RPA	JBL
V	08JAN15	RPA	JBL

CHASSIS DATA
MAKE: PIERCE
MODEL: VELOCITY FR

Pierce MANUFACTURING INC.

TITLE: 75 AERIAL LADDER & BODY ASSEMBLY
500 GALLON WATER TANK

FOR: SHELBY FIRE DEPARTMENT
SHELBY, NC.

DWG NO.: 28457AD

JOB NO.	28457
SCALE 1:24	DATE
DRAWN BY RPA	17DEC14
CHECKED BY JBL	21DEC14
SHEET SIZE D	SHEET NO. 1 OF 1

View File Created 24-MAR-2015 07:16:43