PASSENGER'S SIDE COMPARTMENTS CONTAIN THE FOLLOWING:

COMPARTMENT P1 CONTAINS:
- (1) 4-DRAWER C-TECH CABINET
-
-
-
-

COMPARTMENT P2 CONTAINS:
- (1) 2-WAY SLIDE OUT TOOLBOARD
-
-
-

COMPARTMENT P3 CONTAINS:
- CARGO RETENTION NETTING - LOWER
- (1) HORIZONTAL FLOOR EXTENSION
- (2) 1/2 DEPTH SLIDE OUT TOOLBOARDS
-
-

COMPARTMENT P4 CONTAINS:
- (1) HORIZONTAL FLOOR EXTENSION
- (1) SPECIAL RACK FOR 6 EXTINGUISHERS
- (1) ELECTRIC CORD REEL WITH 200' OF 10/3 YELLOW CORD
- (1) 20A,240V RECEPTACLE CENTER ON FRONT WALL
- (1) 37"DP ADJ SHELF CENTERED OVER FRAMRAILS
- (1) RACK FOR 7 AIR BAGS
-
-

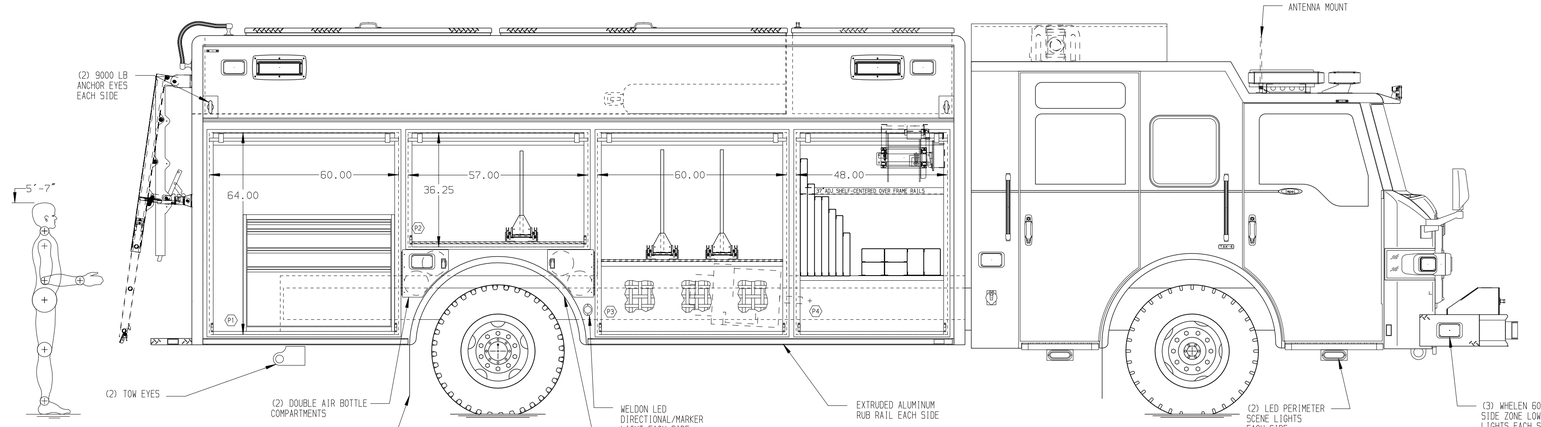

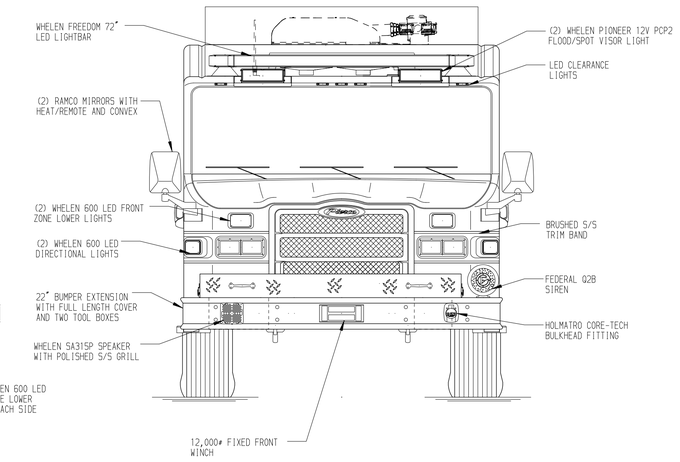

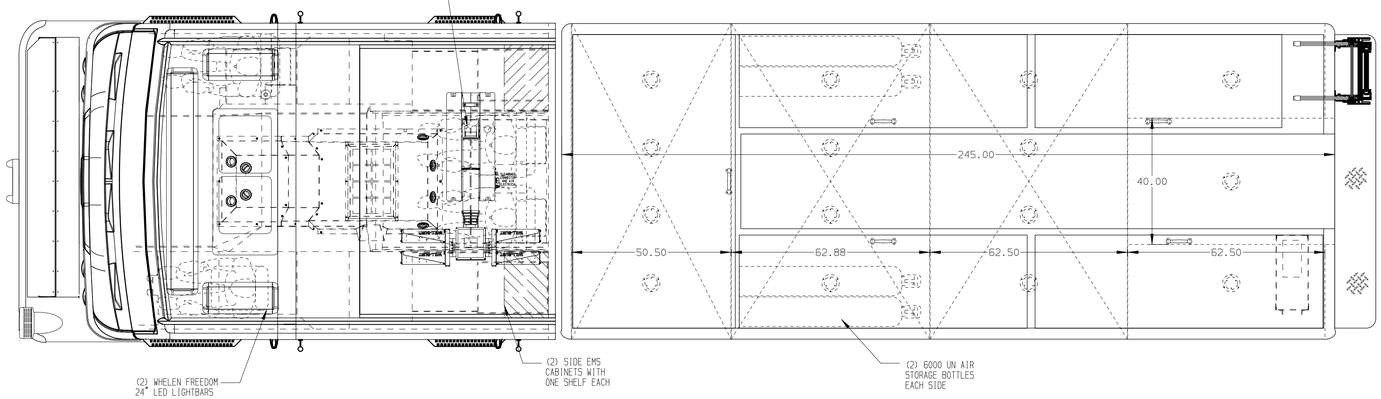

REAR COMPARTMENT CONTAINS THE FOLLOWING:

COMPARTMENT R1 CONTAINS:
- (1) STD DEPTH FLOOR MOUNTED TRAY
-
-
-

DRIVER'S SIDE COMPARTMENTS CONTAIN THE FOLLOWING:

COMPARTMENT D1 CONTAINS:
- (1) OIL DRY HOPPER
- (1) CASCADE SYSTEM CONTROL PANEL
- (1) "SPACESAVER" 2-BOTTLE FILL ENCLOSURE
-
-

COMPARTMENT D2 CONTAINS:
- (1) 2-WAY SLIDE OUT TOOLBOARD
- (1) RACK FOR 6 SCBA BOTTLES
-
-

COMPARTMENT D3 CONTAINS:
- (1) STD DEPTH FLOOR MOUNTED SLIDE OUT TRAY
- (1) HORIZONTAL FLOOR EXTENSION
- (2) 1/2 DEPTH SLIDE OUT TOOLBOARDS
-
-

COMPARTMENT D4 CONTAINS:
- (1) HORIZONTAL FLOOR EXTENSION
- (1) 1/2 DEPTH FLOOR MOUNTED SLIDE OUT TRAY
- (1) ELECTRIC CORD REEL WITH 200' OF 10/3 YELLOW CORD
- (1) CIRCUIT BREAKER PANEL
- (1) GENERATOR METER PANEL
- (1) NIGHT SCAN CONTROLLER
- (1) 20A,240V RECEPTACLE CENTER ON FRONT WALL
- (1) 37"DP ADJ SHELF CENTERED OVER FRAMRAILS
- (1) 20A,240V RECEPTACLE CENTER ON FRONT WALL
-

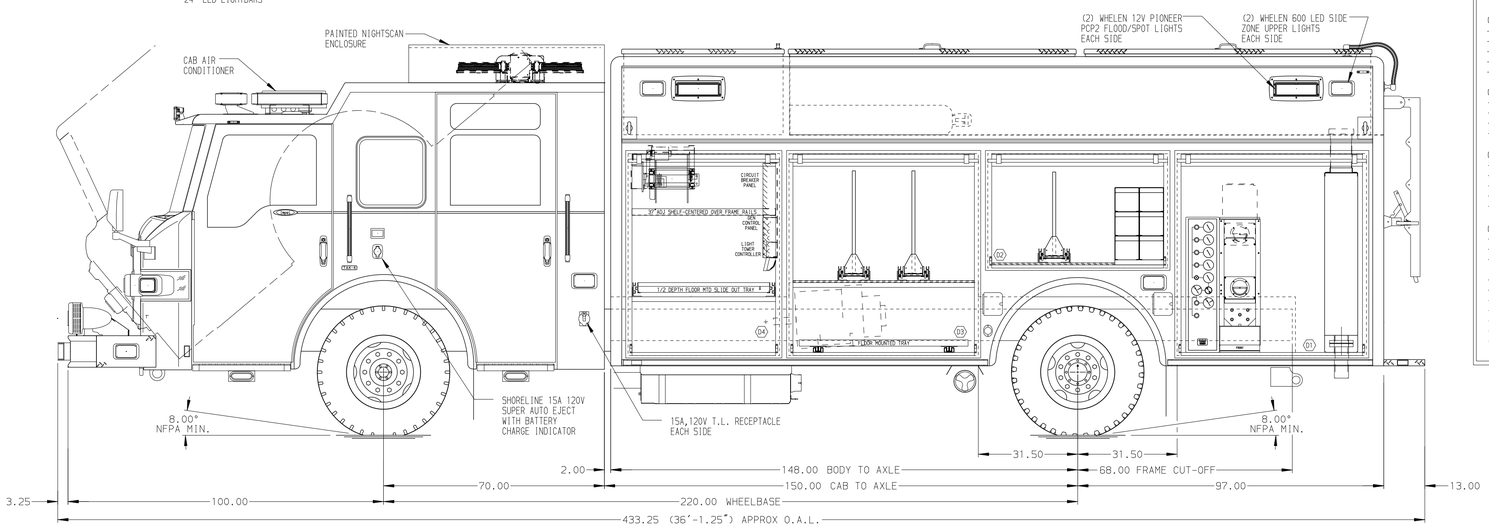

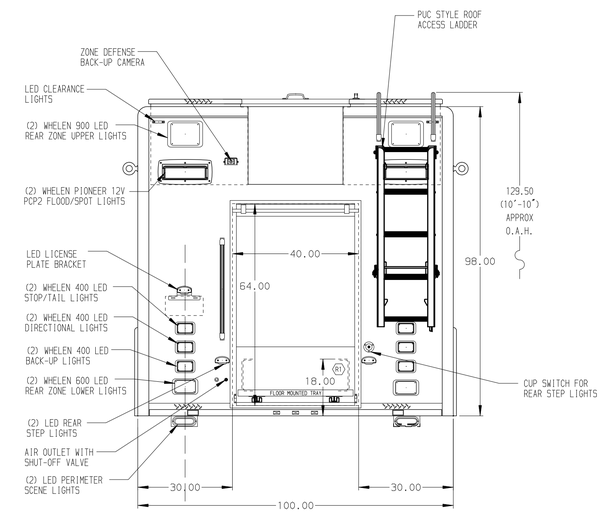

NOTE

DIMENSIONS SHOWN ARE APPROXIMATE AND ARE SUBJECT TO MINOR DEVIATIONS AS MAY OCCUR OR BE NECESSARY IN CONSTRUCTION.
MINOR DETAILS NOT SHOWN.

NOTES:
1. AIR INLET WITH DISCONNECT COUPLING LOCATED IN DRIVERS STEP WELL
2. 45 DEGREE BRACKET TO MOUNT AIR BOTTLE BRACKET IN CREW CAB
3. RUBBER PADDED FLOOR IN CAB AND CREW CAB
4. KUSSMAUL 12V HO BATTERY CHARGER LOCATED BEHIND DRIVERS SEAT
5. TRUCK-LITE MODEL 79384 INCANDESCENT LIGHTS IN EACH COMPARTMENT
6. PROSINE 2.0 1500W 120V AC POWER INVERTER
7. LIMA 40KW 120/240V 60HZ 3 PHASE PTO GENERATOR LOCATED BETWEEN THE FRAME RAILS

SIDE ROLL AND FRONTAL IMPACT PROTECTION

CLEAR DOOR WIDTH KEY	
AMDOR ROLL UP DOORS:	-1 7/8"
GORTITE ROLL UP DOORS:	-2 3/4"
PIERCE DOUBLE LAP DOORS:	-4 1/4"
PIERCE LIFT-UP LAP DOORS:	-1 1/2"
(EX: 60"F-F - 1 7/8"= 58 1/8" CLEAR) (F-F)= FRAME TO FRAME	

REV	DATE	BY	CH
7	27JAN16	DHE	CDK
6	23NOV15	DHE	CDK
5	22SEP15	CLP	AZU

CHASSIS DATA
MAKE: PIERCE
MODEL: IMFR7010

Pierce MANUFACTURING INC.

TITLE: HEAVY DUTY RESCUE NON-WALKIN
FOR: CONWAY FIRE DEPARTMENT, CONWAY, AR — STEVE HAILE
DWG NO.: 28888AD

JOB NO.	28888
SCALE	1:24
DATE	
DRAWN BY	CLP 01SEP15
CHECKED BY	CDK 03SEP15
SHEET SIZE	D
SHEET NO.	1 OF 1

View File Created 27-JAN-2016 13:17:33