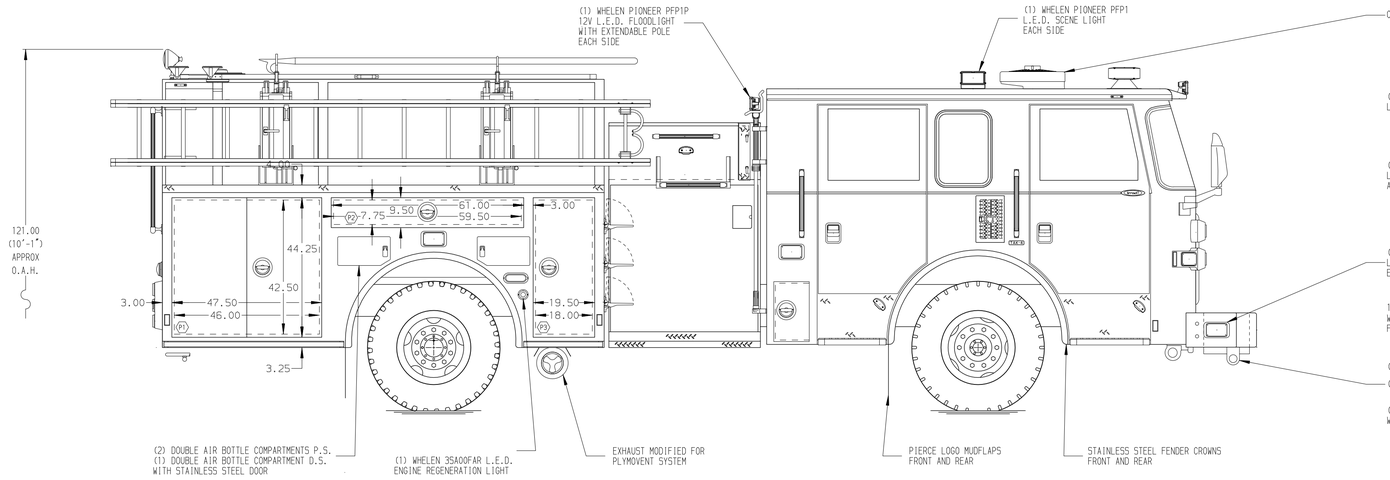

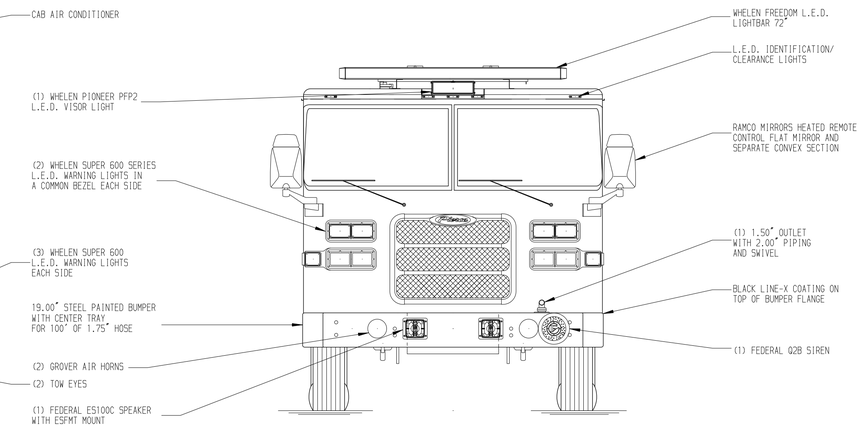

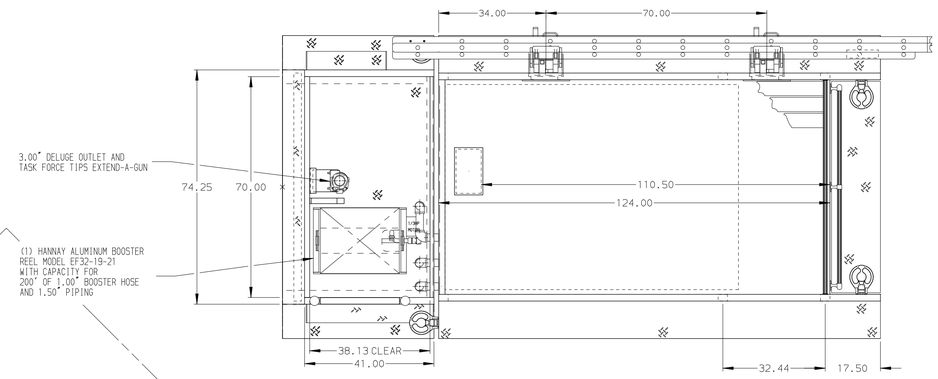

HOSEBED CAPACITIES

1. 150' OF 1.75" D.J. HOSE
2. 200' OF 1.75" D.J. HOSE
3. 250' OF 1.75" D.J. HOSE
4. 1000' OF 5.00" D.J. HOSE
5. 400' OF 3.00" D.J. HOSE

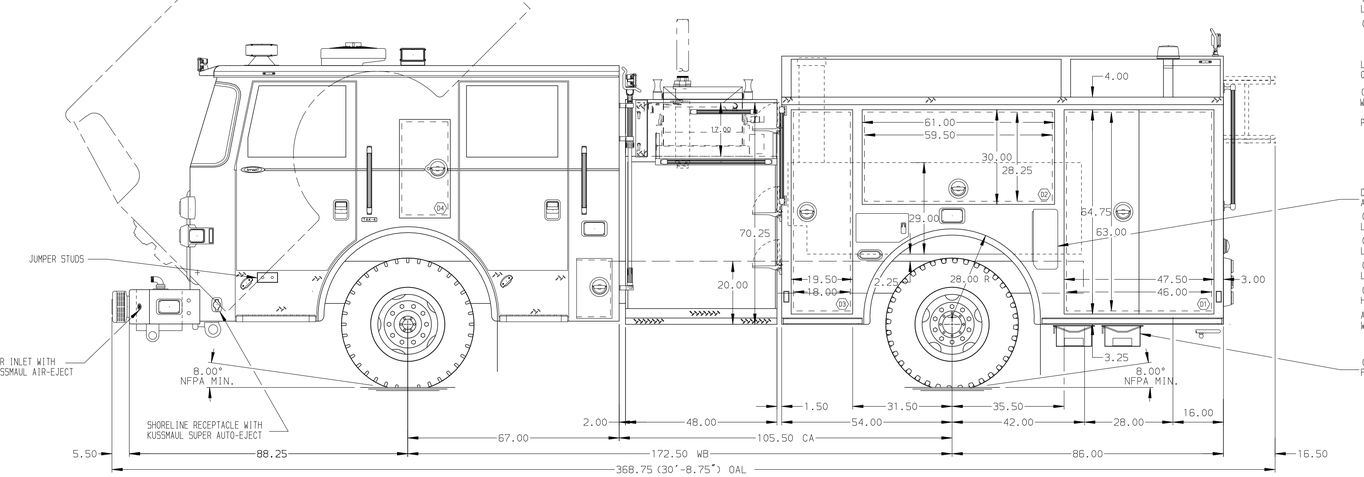

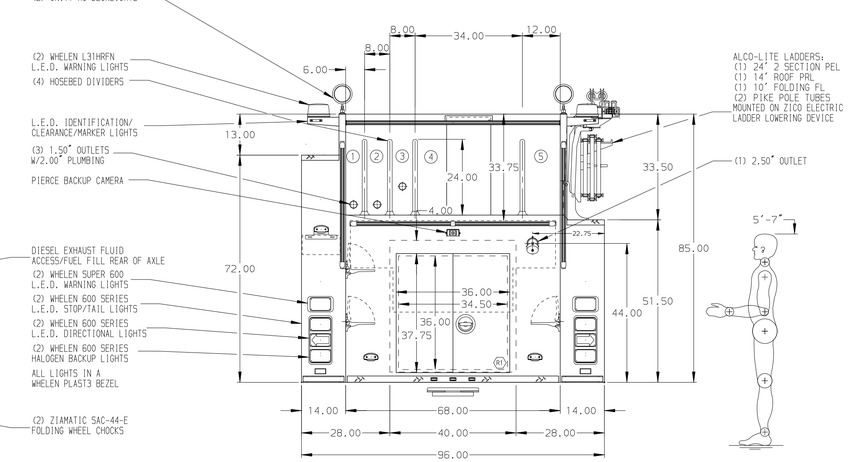

ALUMINUM BODY

NOTE

DIMENSIONS SHOWN ARE APPROXIMATE AND ARE SUBJECT TO MINOR DEVIATIONS AS MAY OCCUR OR BE NECESSARY IN CONSTRUCTION.
MINOR DETAILS NOT SHOWN.

1. ONSPOT AUTOMATIC TIRE CHAINS TO BE PROVIDED AT REAR
2. ALUMINUM 4-WAY ON CAB ROOF
3. KUSSMAUL BATTERY CHARGER/AIR COMPRESSOR LOCATED BEHIND OFFICER'S SEAT
4. BATTERY CHARGE INDICATOR LOCATED NEAR D.S. SEAT RISER WITH BRACKET
5. PERIMETER SCENE LIGHTS LOCATED PER SHOP ORDER
6. PAINTED SHELF TRACKS LOCATED IN COMPARTMENTS D1,D2,D3,P1,P4,R1
7. ONE FULL WIDTH/DEPTH PAINTED ADJUSTABLE SHELF IN COMPARTMENT D1,D2,D3,P1,P4,R1
8. PAC TRAC ON THE REAR WALL OF COMPARTMENT D1,D2,D3
9. ALL FOLDING STEPS TO BE TRIDENT WITH INTEGRATED L.E.D. LIGHT UNLESS SPECIFIED
10. ONE DUPLEX RECEPTACLE LOCATED IN EACH EMS CABINET

REV	DATE	BY	CH
7	15DEC15	JWO	JJR
6	13NOV15	JWO	JJR
5	20AUG15	JWO	KBO

CHASSIS DATA
MAKE: PIERCE
MODEL: ARROW XT

Pierce MANUFACTURING INC.

TITLE: 1500-D-500P,140", FULL HEIGHT D.S.,BROOM P.S. DELUGE, BOOSTER REEL,ZICO LADDER RACK
FOR: FAYETTEVILLE FIRE DEPARTMENT FAYETTEVILLE,ARKANSAS
DWG NO.: 29272AD

JOB NO.	SCALE	DRAWN BY	CHECKED BY	SHEET SIZE	SHEET NO.
29272	1:24	JWO	KBO	D	1 OF 1

DATE: 04AUG15 / 05AUG15

View File Created 15-DEC-2015 08:28:35