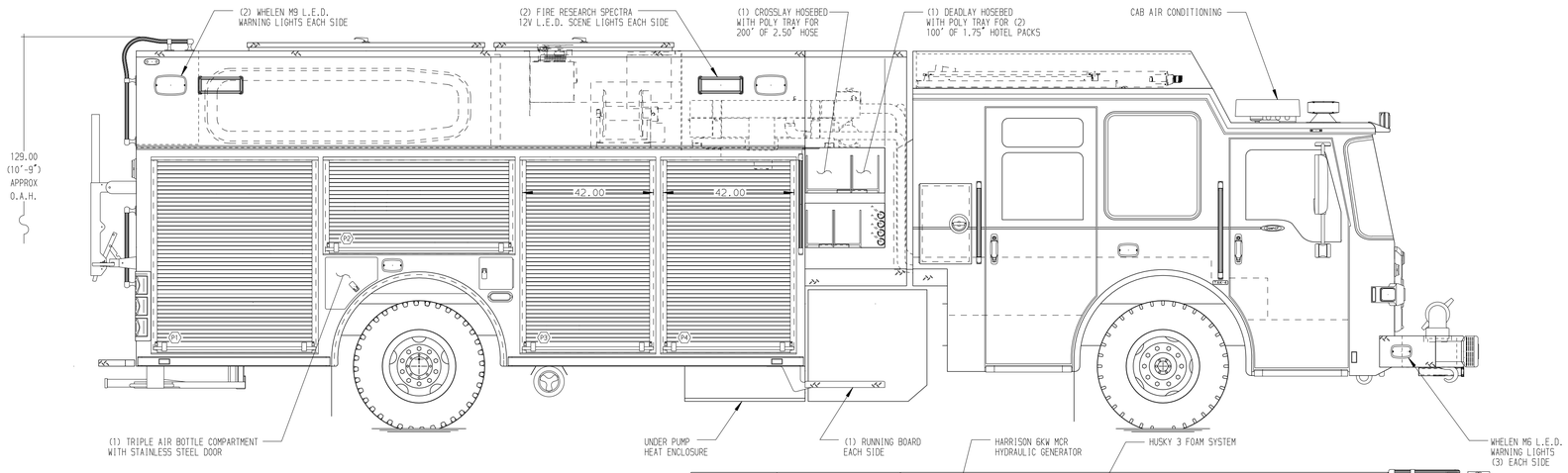

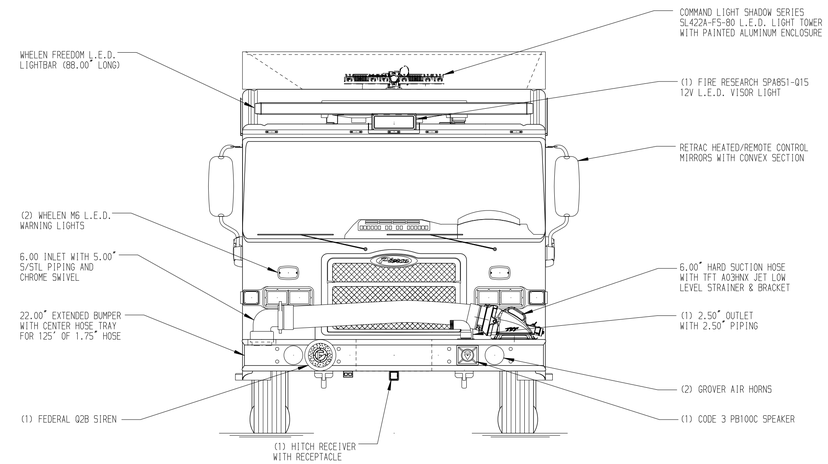

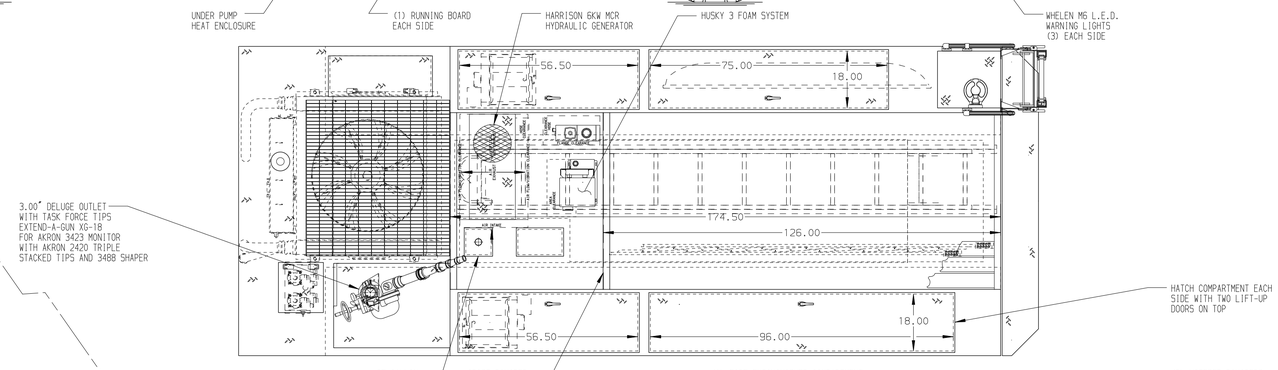

HOSEBED CAPACITIES
1 - 800' OF 5.00" HOSE
2 - 600' OF 3.00" HOSE
3 - 300' OF 2.50" HOSE

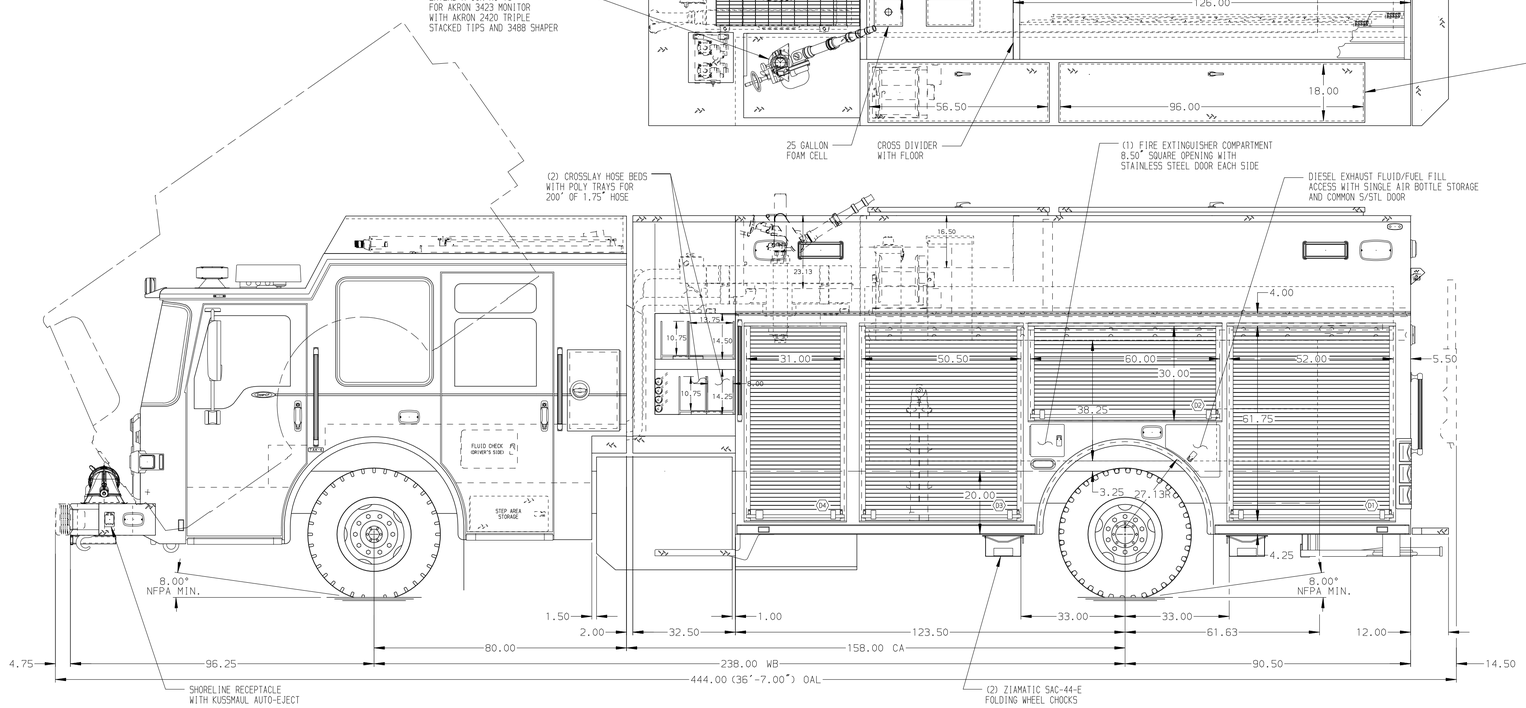

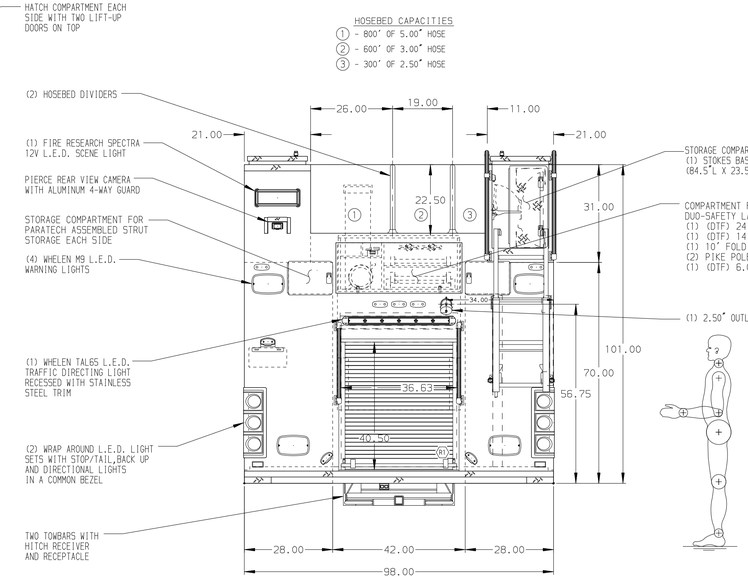

ALUMINUM BODY

SIDE ROLL & FRONTAL IMPACT PROTECTION

NOTE

DIMENSIONS SHOWN ARE APPROXIMATE AND ARE SUBJECT TO MINOR DEVIATIONS AS MAY OCCUR OR BE NECESSARY IN CONSTRUCTION.
MINOR DETAILS NOT SHOWN.

1. BATTERY CHARGER LOCATED UNDER THE CENTER CONSOLE AREA OR BEHIND DRIVER'S SEAT
2. ONE ADJUSTABLE FULL WIDTH/FULL DEPTH SHELF IN COMPARTMENT D2, P4 & R1; TWO IN D1 & P3
3. ONE PAINTED ADJUSTABLE SLIDE-OUT TRAY IN COMPARTMENT D2 & P1
4. ONE PAINTED ADJUSTABLE TILTING SLIDE-OUT TRAY IN COMPARTMENT D3, P1, P2, P3 & P4
5. ONE FLOOR MOUNTED SLIDE-OUT TRAY IN COMPARTMENT D1 & P1
6. ONE ALUMINUM SLIDE-OUT TOOL BOARD IN COMPARTMENT D3; TWO IN D1
7. ONE VERTICAL PARTITION IN COMPARTMENT D1, P3 & P4
8. HINGED AIR BAG RACK FOR HOLDING (6) AIR BAGS IN COMPARTMENT P3
9. CIRCUIT BREAKER PANEL IN COMPARTMENT D3
10. SUB FEED BREAKER BOX IN COMPARTMENT D3
11. ONE AKRON ELECTRIC REWIND CORD REEL LOCATED ABOVE COMPARTMENT D3 & P3 WITH 200' OF 10/3 CABLE, REEL COVER, AND ALUMINUM JUNCTION BOX HOLDERS
12. BATTERY CHARGER INDICATOR LOCATED IN D.S. STEP WELL
13. ELASTIC PULL STRAP ON ALL SIDE BODY COMPARTMENT ROLL-UP DOORS
14. STORAGE FOR LITTLE GIANT LADDER LOCATED IN COMPARTMENT D3
15. ONE 120V 6-PLACE RECEPTACLE LOCATED IN EACH EMS COMPARTMENT AND BEHIND THE DRIVER'S SEAT
16. ONE 120V DUPLEX RECEPTACLE LOCATED IN COMPARTMENT P4
17. ONE HORIZONTAL PARTITION IN COMPARTMENT D3 & P4
18. NYLON STRAP WITH VELCRO IN COMPARTMENT D3 & P3
19. STORAGE RACK FOR (2) AIR BOTTLES LOCATED IN COMPARTMENT P3
20. ONE 120V 4-PLACE RECEPTACLE LOCATED IN COMPARTMENT P1

REV	DATE	BY	CH
1	01FEB16	DDO	JBO
2	23DEC15	DDO	JBO
1	09OCT15	DDO	MGE

CHASSIS DATA — MAKE: PIERCE — MODEL: DASH CF

Pierce MANUFACTURING INC.

TITLE: 1500-D-750G WATER W/25G FOAM CELL, 214" PUC RESCUE (3) CROSSLAYS, EQUIPMENT DECK, GENERATOR, DELUGE

FOR: MILTON FIRE DEPARTMENT, MILTON, WISCONSIN

DWG NO.: 29356AD

JOB NO.	29356
SCALE	1:24
DATE	
DRAWN BY	DDO 29SEP15
CHECKED BY	MGE 30SEP15
SHEET SIZE	D
SHEET NO.	1 OF 1

View File Created 05-FEB-2016 07:49:20