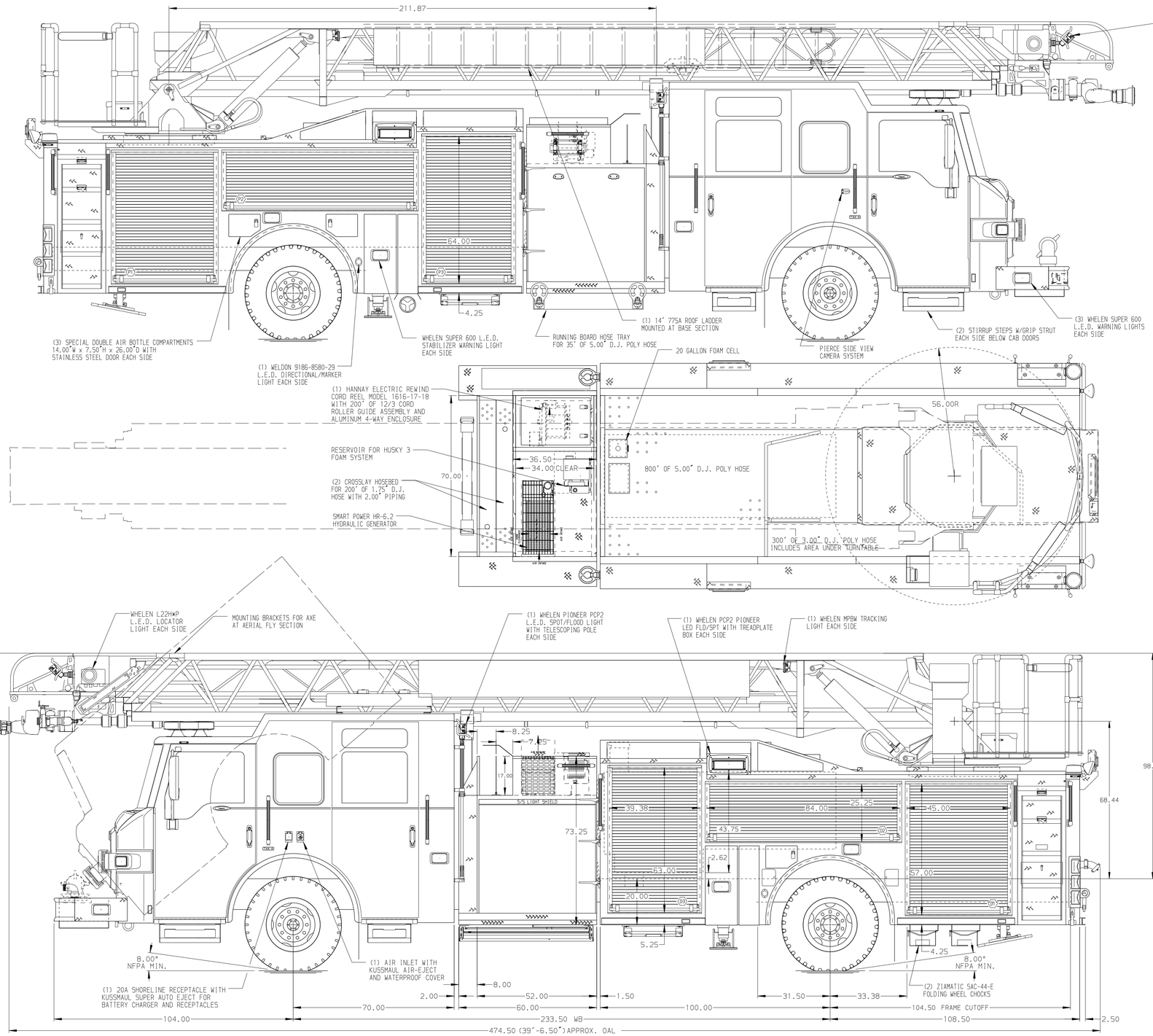

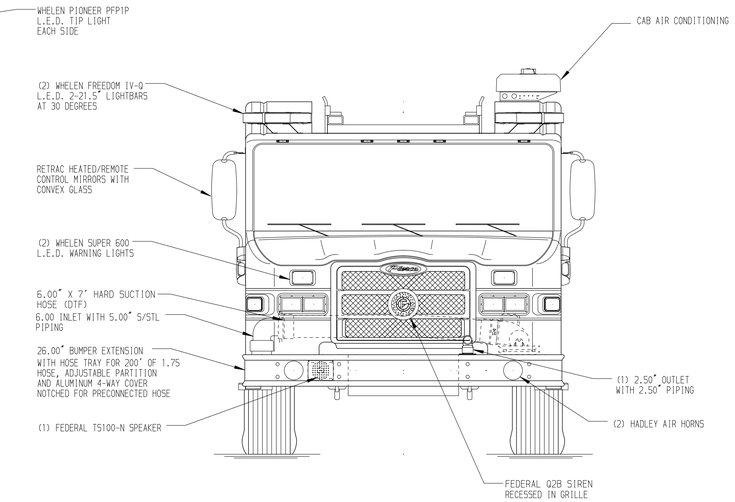

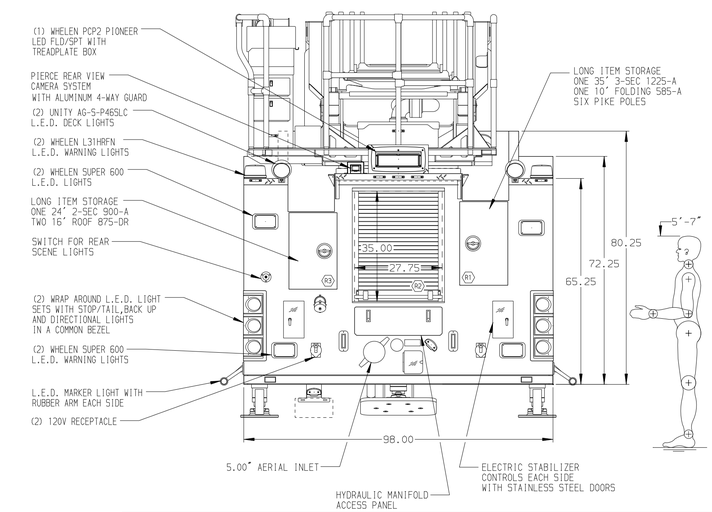

ALUMINUM BODY | MAXIMUM O.A.L. 480" | MAXIMUM O.A.H. 144" | SIDE ROLL & FRONTAL IMPACT PROTECTION

NOTE

DIMENSIONS SHOWN ARE APPROXIMATE AND ARE SUBJECT TO MINOR DEVIATIONS AS MAY OCCUR OR BE NECESSARY IN CONSTRUCTION.
MINOR DETAILS NOT SHOWN.

1. KUSSMAUL BATTERY CHARGER LOCATED BEHIND DRIVER'S SEAT
2. BATTERY CHARGE INDICATOR LOCATED D.S. SEAT RISER WITH BRACKET
3. ONE ADJUSTABLE FULL WIDTH/FULL DEPTH SHELF IN COMPARTMENTS D2,D3,P2 TWO IN D1,P1,P3
4. ONE FLOOR MOUNTED SLIDE-OUT TRAY IN COMPARTMENTS D1,P1,P3
5. THREE ALUMINUM SLIDE-OUT TOOL BOARD IN COMPARTMENT D3
6. ADJUSTABLE SHELVE LOW/SPECIAL SIDE HEIGHT COMPARTMENT R2
7. ALUMINUM PEGBOARD W/TRACK REAR WALL COMPARTMENTS D1,D2,D3,P1,P2,P3
8. CIRCUIT BREAKER PANEL IN COMPARTMENT D3 FORWARD WALL LOW
9. PLUMBING FOR HUSKY 3 FOAM SYSTEM PER SHOP ORDER
10. FOUR TRIDENT FOLDING STEPS W/LED ON AERIAL DEVICE
11. L.E.D. LIGHTING ON AERIAL LADDER SECTIONS
12. 120V POWER TO AERIAL TIP WITH LS-20 RECEPTACLE
13. 2-WAY INTERCOM SYSTEM BETWEEN AERIAL TIP AND TURNTABLE
14. SENTREX 6-PLACE RECEPTACLE STRIP LOCATED ON CAB SIDE WALL BETWEEN THE FRONT AND REAR SEAT BELT TENSIONERS EACH SIDE
15. LIFTING EYE RESCUE ATTACHMENT AT AERIAL TIP
16. WIRELESS HETRONIC AND REMOTE TIP CONTROLS
17. 1500 GPM HIGH FLOW WATERWAY

REV	DATE	BY	CH
7	19JAN16	RPA	COR
6	03DEC15	RPA	COR
5	16OCT15	SHU	GRM

CHASSIS DATA
MAKE: PIERCE
MODEL: IMPEL

Pierce MANUFACTURING INC.

TITLE: 107' ASCENDANT HSL AERIAL LADDER AND BODY ASSEMBLY
500 GALLON TANK - 480 WATER/20 FOAM

FOR: SOUTHWEST MERCER FIRE DISTRICT
FORT RECOVERY, OH

DWG NO.: 29388AD

JOB NO. 29388
SCALE 1:24
DATE
DRAWN BY RPA 28SEP15
CHECKED BY GRM 29SEP15
SHEET SIZE D
SHEET NO. 1 OF 1

View File Created 27-JAN-2016 10:45:33