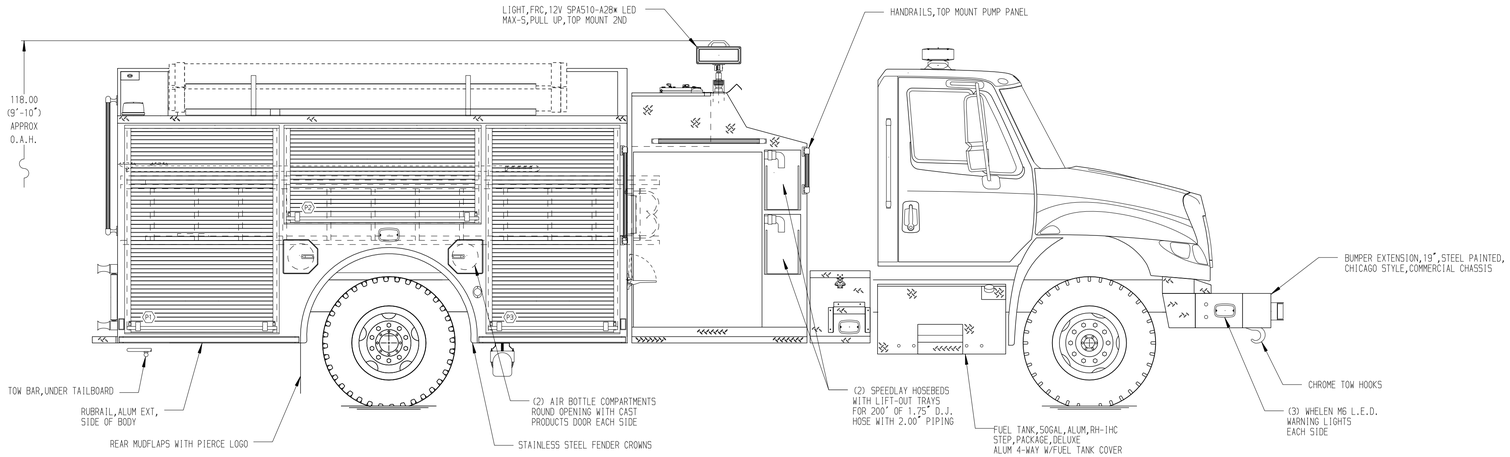

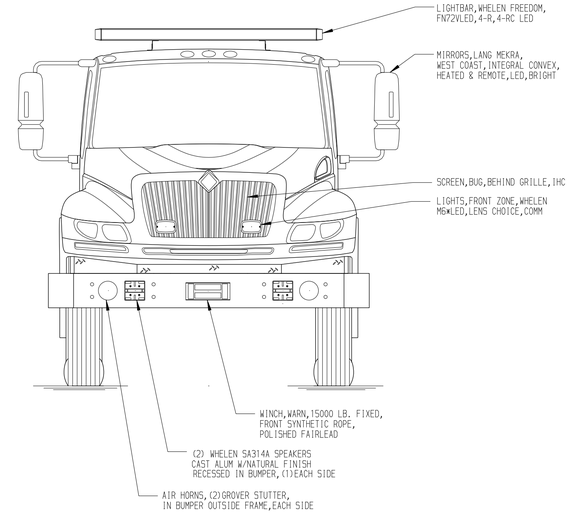

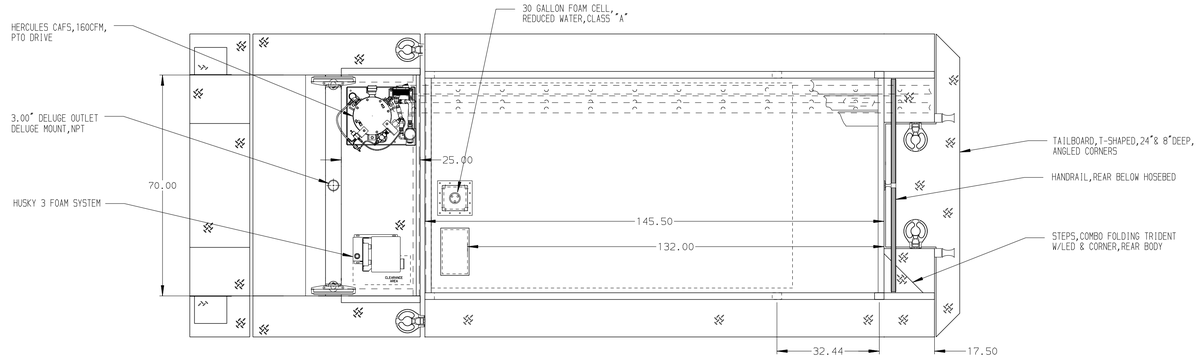

HOSEBED CAPACITIES

(1) 2200' OF 3.00" D.J. POLYESTER HOSE

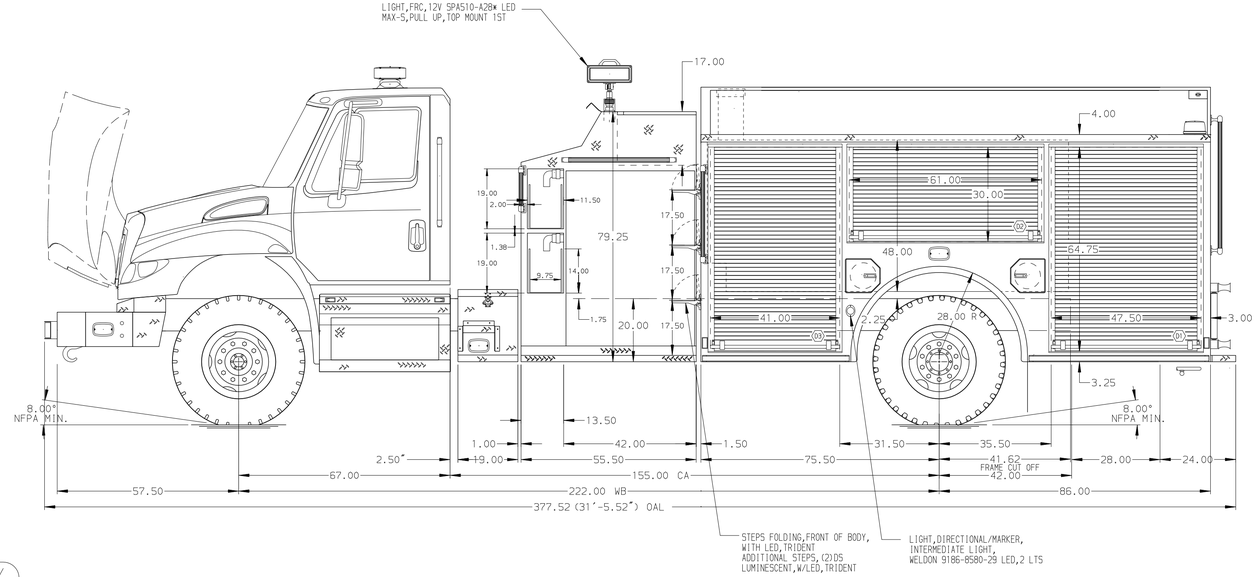

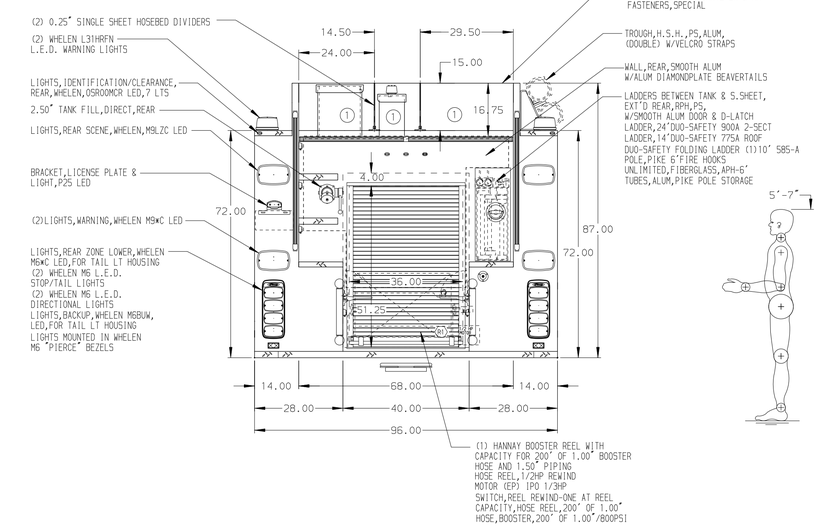

ALUMINUM BODY

NOTE

DIMENSIONS SHOWN ARE APPROXIMATE AND ARE SUBJECT TO MINOR DEVIATIONS AS MAY OCCUR OR BE NECESSARY IN CONSTRUCTION.
MINOR DETAILS NOT SHOWN.

REV	DATE	BY	CH
B	07JAN16	JLA	BRX
A	09OCT15	RWI	JAF

CHASSIS DATA
MAKE: IHC
MODEL: 4400

Pierce MANUFACTURING INC.
BRADENTON, FLORIDA

TITLE: 1250-D-970 POLY,30 FOAM,161"BODY,DS & PS FULL HEIGHT 42"TOP MOUNT,(2)1.50"SPEEDLAYS W/POLY TRAYS

FOR: OLA FIRE DEPARTMENT
OLA, ARKANSAS

DWG NO.: 29459AD

JOB NO.	29459
SCALE	1:24
DATE	
DRAWN BY	JAF
29SEP15	
CHECKED BY	RWI
30SEP15	
SHEET SIZE	D
SHEET NO.	1 OF 1

View File Created 07-JAN-2016 10:19:57