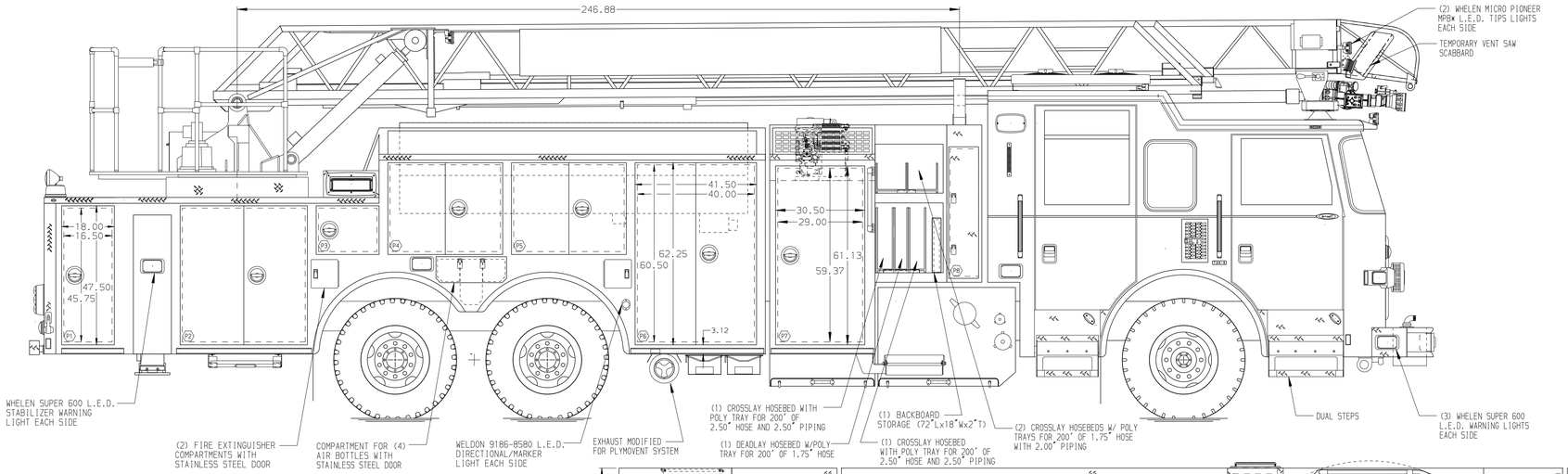

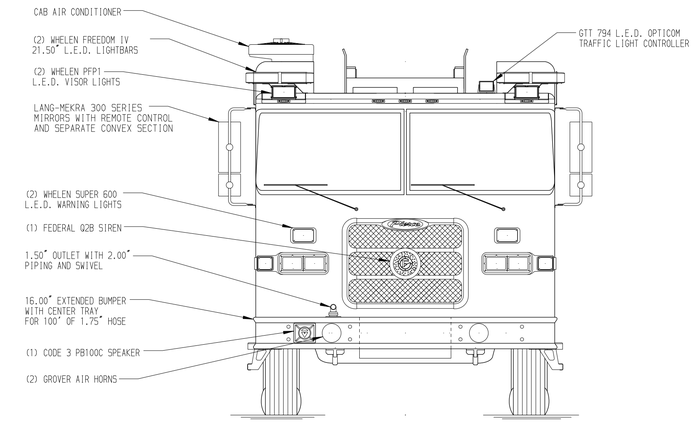

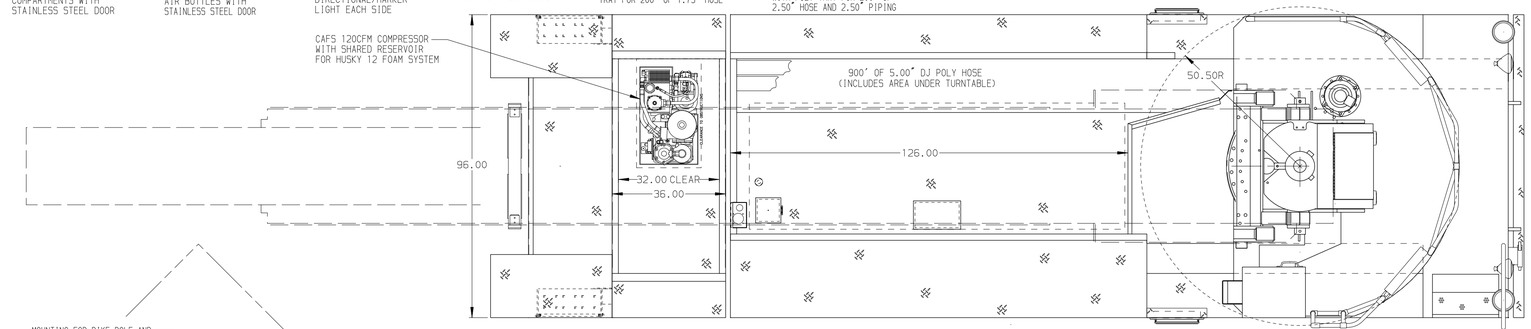

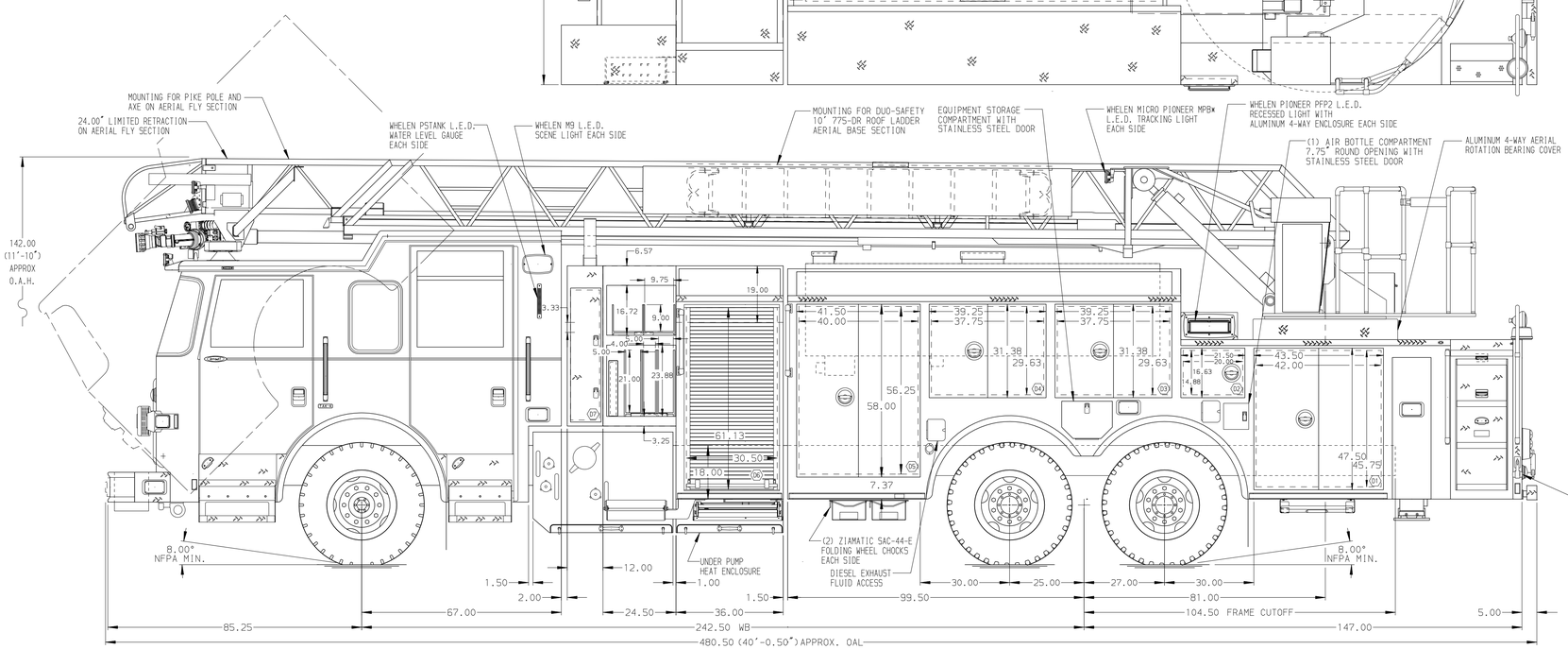

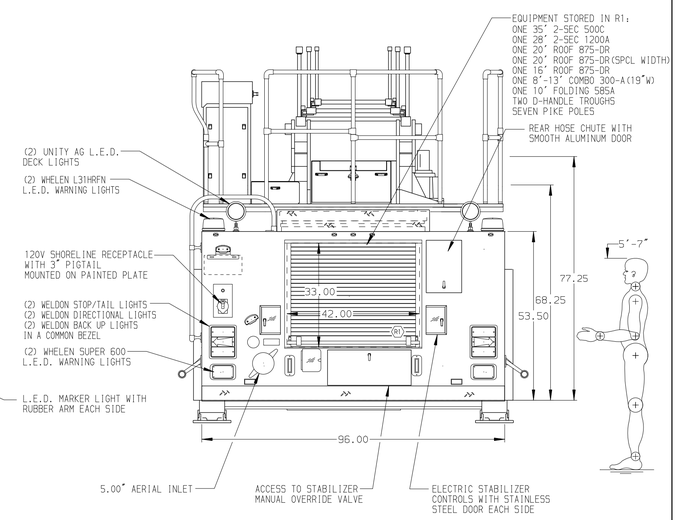

ALUMINUM BODY

NOTE

DIMENSIONS SHOWN ARE APPROXIMATE AND ARE SUBJECT TO MINOR DEVIATIONS AS MAY OCCUR OR BE NECESSARY IN CONSTRUCTION.
MINOR DETAILS NOT SHOWN.

1. ALUMINUM 4-WAY ON CAB ROOF
2. ONE ADJUSTABLE SHELF IN COMPARTMENT D3,D4,P4,P5;TWO IN D5,P6
3. FOUR ADJUSTABLE SHELVES WITH SPECIAL SIDE HEIGHT IN COMPARTMENT P7
4. ONE FLOOR MOUNTED SLIDE-OUT TRAY WITH SIDE SLIDES IN COMPARTMENT P6
5. ONE ADJUSTABLE SLIDE-OUT TRAY IN COMPARTMENT D5
6. ALUMINUM PEGBOARD WITH TRACKS ON THE REAR WALL OF COMPARTMENT P1
7. DRAIN HOLE WITH SPLASH GUARD LOCATED IN EACH BODY COMPARTMENT
8. BATTERY CHARGER LOCATED IN CAB,BEHIND DRIVER'S SEAT
9. STABILIZERS MODIFIED FOR 18.00" GROUND PENETRATION
10. KUSSMAUL AIR COMPRESSOR LOCATED IN COMPARTMENT D5
11. AIR BOTTLE MOUNTING TRACK HOLDERS IN COMPARTMENTS D1,P2
12. L.E.D. LIGHTING ON AERIAL LADDER SECTIONS
13. FIRE RESEARCH 3-WAY INTERCOM SYSTEM BETWEEN AERIAL TIP,PUMP PANEL & TURNTABLE
14. AERIAL PEDESTAL RAISED 3.00"
15. LIFTING EYE RESCUE ATTACHMENT AT AERIAL TIP
16. TRIDENT FOLDING STEPS MOUNTED ON AERIAL DEVICE PER SHOP ORDER
17. REMOTE LADDER CONTROLS AT AERIAL TIP
18. VOGEL LUBE SYSTEM LOCATED IN PUMP HOUSE
19. PIERCE L.E.D. DUAL LIGHT STRIPS LOCATED IN COMPARTMENTS PER SHOP ORDER
20. DRI-DECK MATTING ON ALL COMPARTMENT SHELVES AND TRAYS
21. DRI-DECK MATTING ON THE FLOOR OF COMPARTMENTS D1,D2,D3,D4,D5,P1,P2,P3,P4,P5,P7

REV	DATE	BY	CH
7	21MAR16	SHU	SHA
6	26FEB16	SHU	SHA
5	18DEC15	SHU	GRM

CHASSIS DATA
MAKE: PIERCE
MODEL: ARROW XT

Pierce MANUFACTURING INC.

TITLE: 75 AERIAL LADDER & BODY ASSEMBLY
525 GALLON TANK, 500 GAL WATER, 25 GALLON FOAM
FOR: SPOKANE CITY
SPOKANE, WASHINGTON
DWG NO.: 29485AD

JOB NO.	29485 01-02
SCALE	1:24
DATE	
DRAWN BY	SHU 02DEC15
CHECKED BY	BZI 04DEC15
SHEET SIZE	D
SHEET NO.	1 OF 1

View File Created 21-MAR-2016 15:47:37