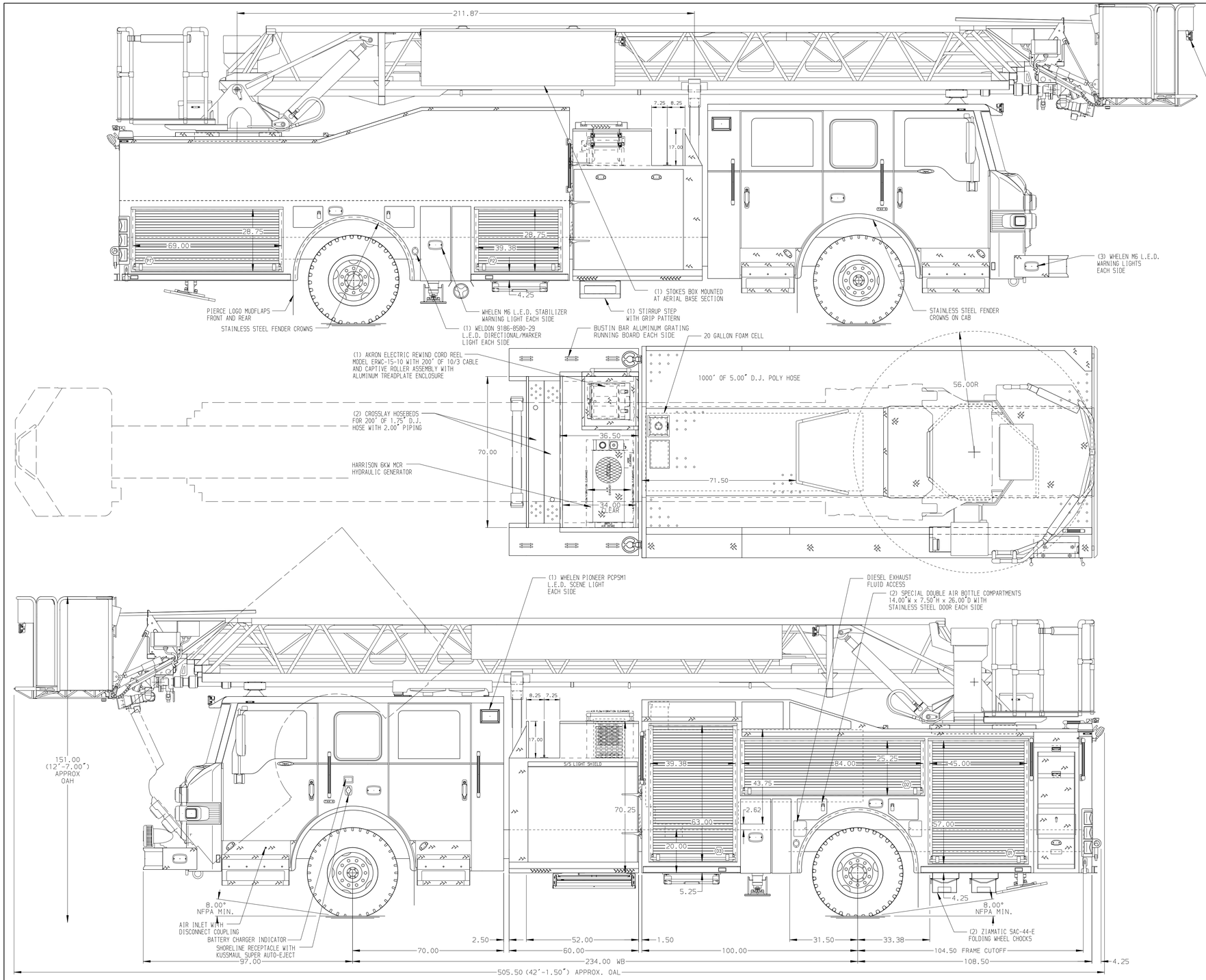

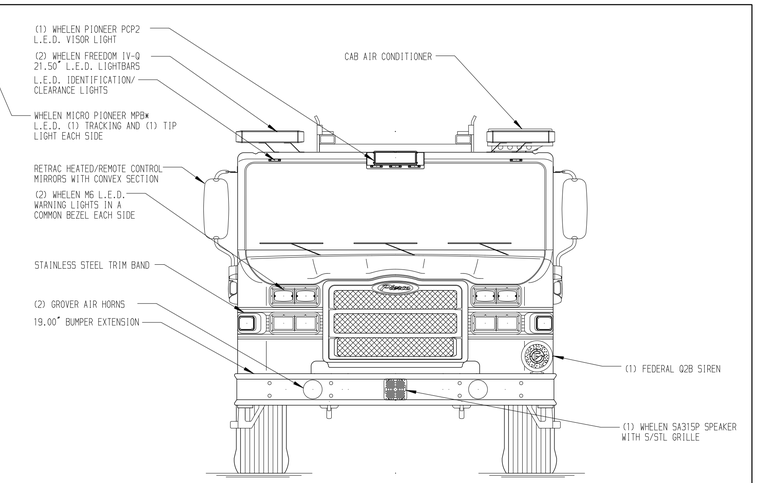

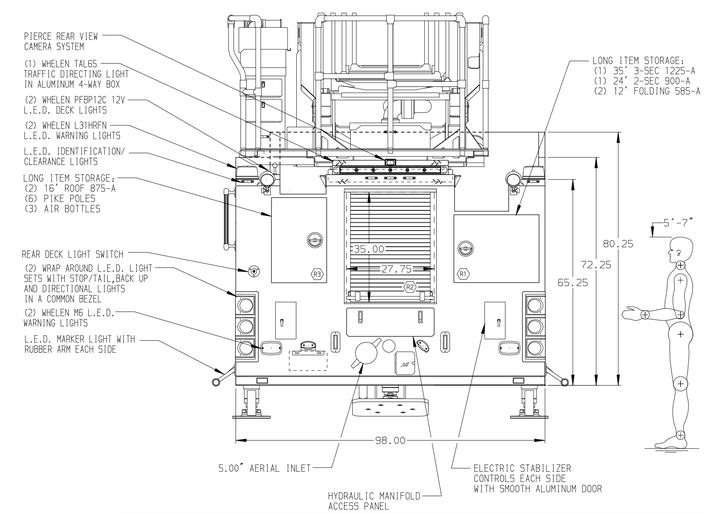

ALUMINUM BODY

SIDE ROLL AND FRONTAL IMPACT PROTECTION

NOTE

DIMENSIONS SHOWN ARE APPROXIMATE AND ARE SUBJECT TO MINOR DEVIATIONS AS MAY OCCUR OR BE NECESSARY IN CONSTRUCTION.
MINOR DETAILS NOT SHOWN.

1. BATTERY CHARGER LOCATED IN CREW CAB SEAT RISER
2. CIRCUIT BREAKER PANEL IN COMPARTMENT D3
3. PIERCE L.E.D. COMPARTMENT DUAL LIGHT STRIPS LOCATED PER SHOP ORDER
4. ONE ADJUSTABLE FULL WIDTH/FULL DEPTH SHELF IN COMPARTMENTS D1,D2,D3
5. ONE FLOOR MOUNTED SLIDE-OUT TRAY IN COMPARTMENTS D1,D3
6. PLUMBING FOR FUTURE FOAM SYSTEM PER SHOP ORDER
7. PERIMETER SCENE LIGHTS LOCATED PER SHOP ORDER
8. TRIDENT FOLDING STEPS MOUNTED ON AERIAL DEVICE PER SHOP ORDER
9. L.E.D. LIGHTING ON AERIAL LADDER SECTIONS
10. 120V DUPLEX RECEPTACLE AT THE AERIAL TIP
11. 2-WAY INTERCOM SYSTEM BETWEEN AERIAL TIP AND TURNTABLE
12. NON-RAISED AERIAL PEDESTAL
13. SPREADER BAR FOR LIFTING EYE RESCUE ATTACHMENT AT AERIAL TIP
14. 1500 GPM HIGH FLOW WATERWAY

REV	DATE	BY	CH
D	19APR17	TKA	CRI
C	10FEB16	JGA	THS
B	07JAN16	JGA	THS
A	06NOV15	JGA	GRM

CHASSIS DATA
MAKE: PIERCE
MODEL: IMPEL FR

Pierce MANUFACTURING INC.

TITLE: 110' ASCENDANT AERIAL PLATFORM AND BODY ASSEMBLY 500 GALLON TANK - 480 WATER/20 FOAM
FOR: PIERCE FIELD UNIT APPLETON, WI
DWG NO.: 29488AD

JOB NO.: 29488
SCALE: 1:24
DATE: 190CT15
DRAWN BY: JGA
CHECKED BY: GRM
200CT15
SHEET SIZE: D
SHEET NO.: 1 OF 1

View File Created 24-APR-2017 11:00:49