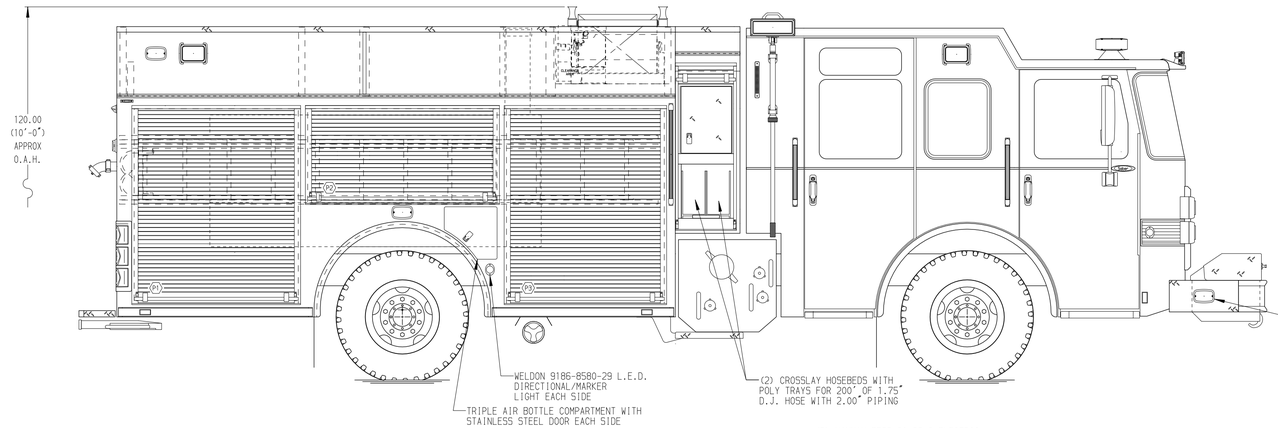

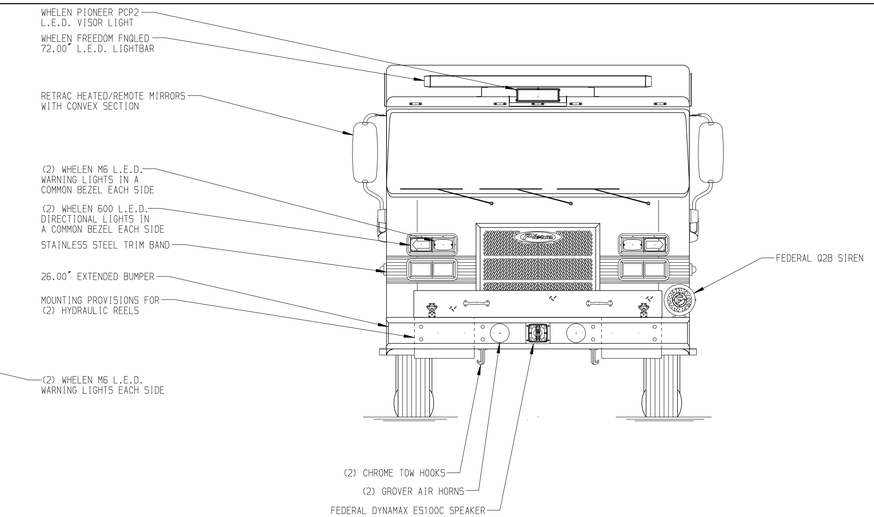

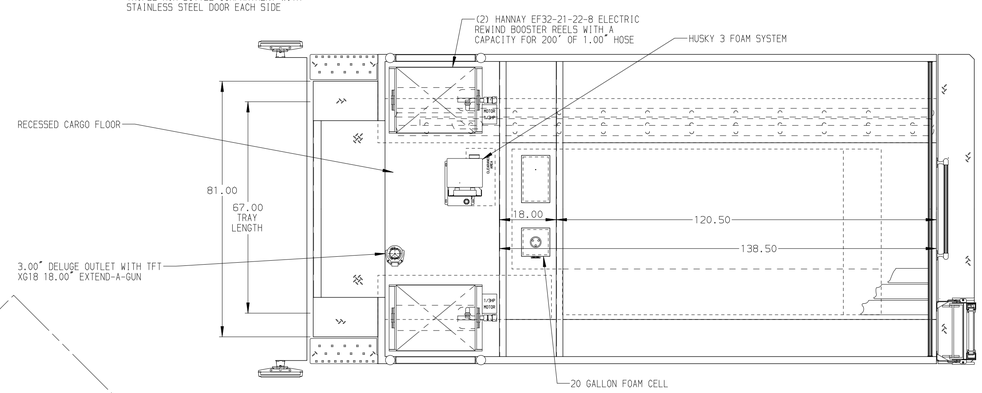

HOSEBED CAPACITIES

1. OPEN STORAGE
2. 400' OF 3.00" D.J. POLY HOSE
3. 300' OF 1.75" D.J. POLY HOSE
4. 1100' OF 5.00" D.J. POLY HOSE

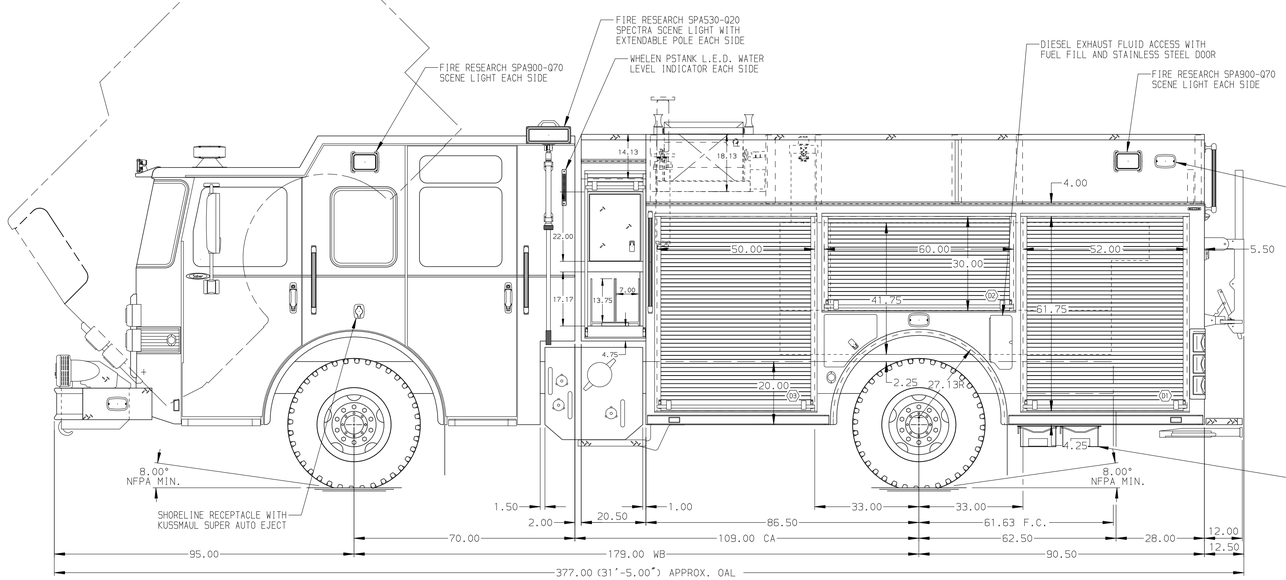

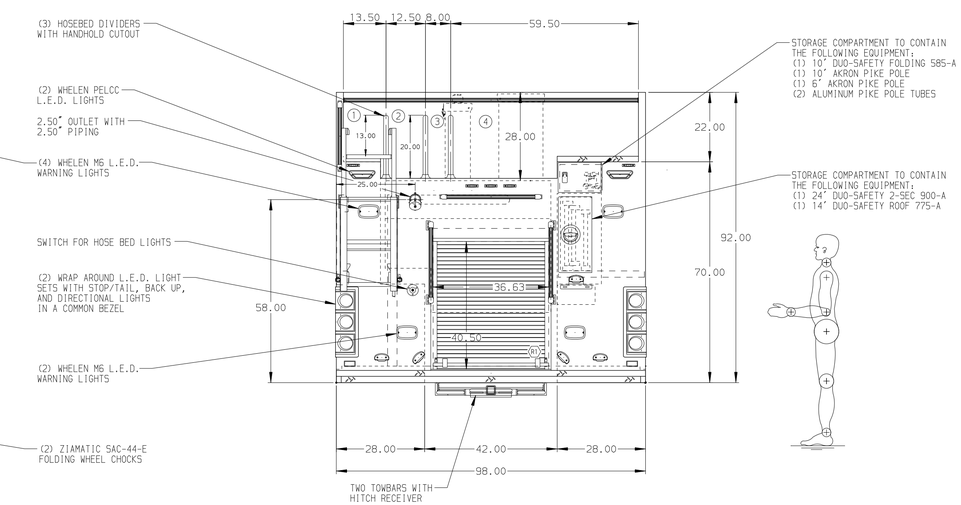

ALUMINUM BODY

NOTE

DIMENSIONS SHOWN ARE APPROXIMATE AND ARE SUBJECT TO MINOR DEVIATIONS AS MAY OCCUR OR BE NECESSARY IN CONSTRUCTION.
MINOR DETAILS NOT SHOWN.

1. AIR INLET WITH DISCONNECT FITTING LOCATED ON DRIVER SIDE PUMP PANEL
2. BATTERY CHARGER LOCATED IN COMPARTMENT-D3
3. BATTERY CHARGER INDICATOR LOCATED ON DRIVER SIDE SEAT RISER
4. FULL WIDTH/DEPTH ADJUSTABLE SHELVES WITH 2" SIDES IN COMPARTMENT-TWO IN D1,D3,P1,P3
5. FLOOR MOUNTED SLIDE-OUT TRAYS WITH 2" SIDES IN COMPARTMENT-D1,P1,P3,R1
6. ALUMINUM SWING-OUT TOOLBOARDS WITH PEGBOARD PATTERN IN COMPARTMENT-D2

REV	DATE	BY	CH
F	14APR16	BST	TWH
E	22MAR16	BST	TWH
D	21MAR16	BST	TWH
C	26FEB16	BST	DTS
B	25FEB16	BST	DTS

CHASSIS DATA: MAKE PIERCE; MODEL SABER FR

Pierce MANUFACTURING INC.

TITLE: 1500-D-750P W/20 GAL. FOAM CELL,DELUGE,(2) CROSSLAYS 177" PUC RESCUE BODY,LADDERS THRU BODY,HUSKY 3

FOR: NILES FIRE DEPARTMENT, NILES, OH

DWG NO. 29537AD

JOB NO.	29537
SCALE 1:24	DATE
DRAWN BY BST	12DEC15
CHECKED BY MGE	14DEC15
SHEET SIZE D	SHEET NO. 1 OF 1

View File Created 14-APR-2016 16:13:06