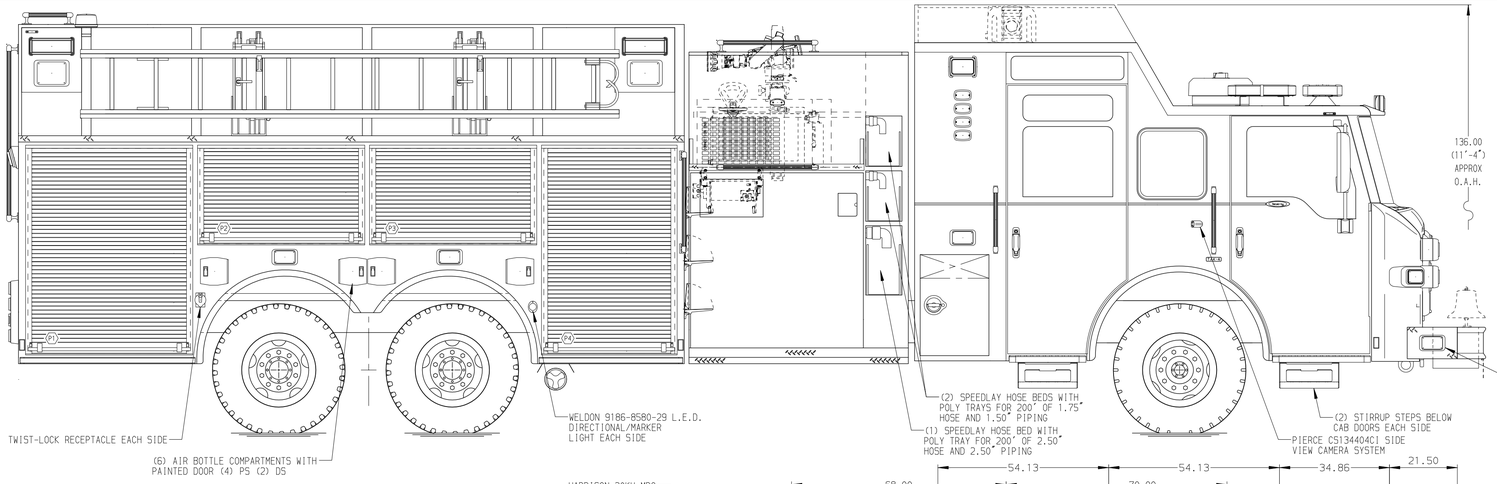

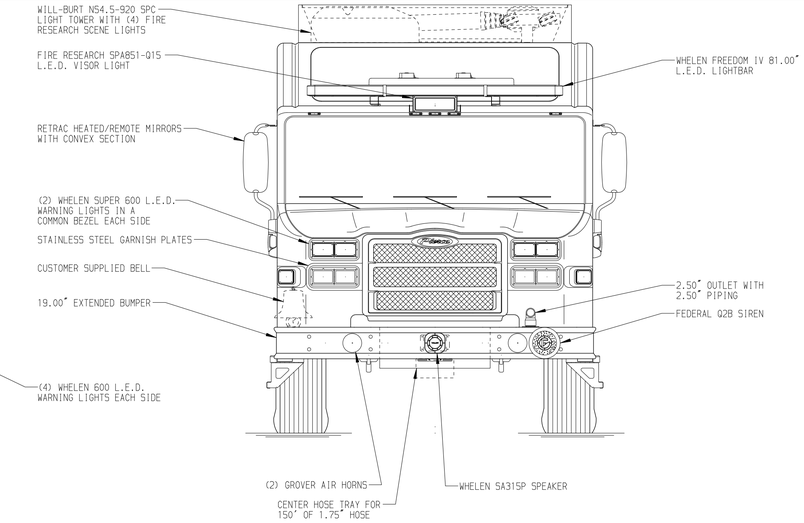

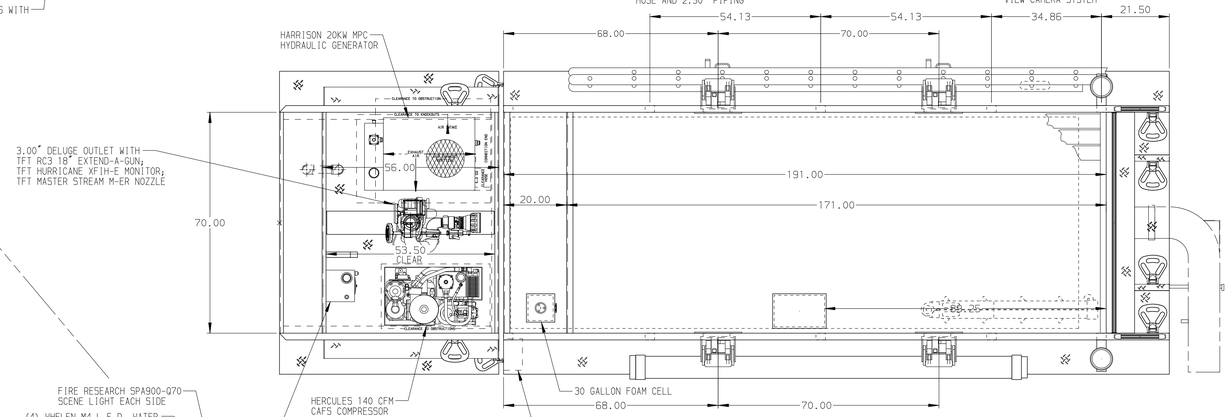

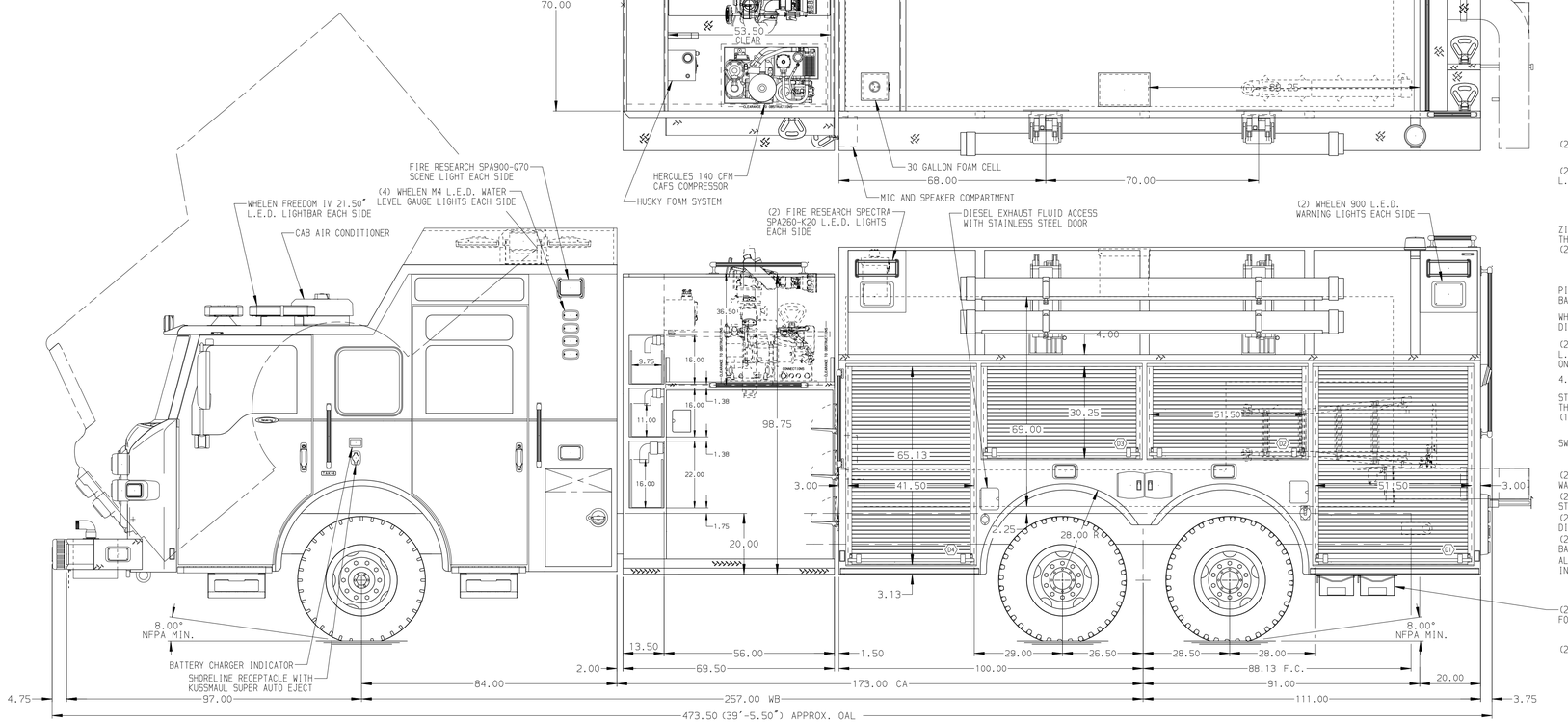

HOSEBED CAPACITIES

1. 200' OF 2.50" D.J. POLY HOSE
2. 1500' OF 5.00" D.J. POLY HOSE
3. 200' OF 1.75" D.J. POLY HOSE

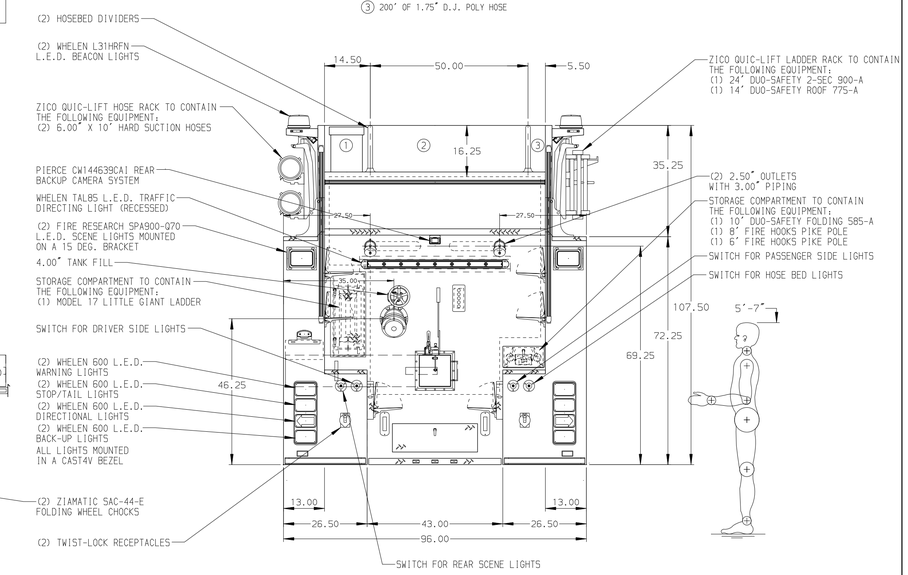

ALUMINUM BODY

NOTE

DIMENSIONS SHOWN ARE APPROXIMATE AND ARE SUBJECT TO MINOR DEVIATIONS AS MAY OCCUR OR BE NECESSARY IN CONSTRUCTION.
MINOR DETAILS NOT SHOWN.

1. AIR INLET WITH DISCONNECT FITTING LOCATED IN DRIVER SIDE STEP WELL
2. BATTERY CHARGER LOCATED BEHIND DRIVER SEAT
3. SUB-FEED CIRCUIT BREAKER PANEL IN COMPARTMENT-D4
4. FULL WIDTH/DEPTH ADJUSTABLE SHELVES WITH 2" SIDES IN COMPARTMENT-ONE IN D2,D3,D4,P2, P3,P4;TWO IN D1,P1
5. FLOOR MOUNTED FULL WIDTH/DEPTH SLIDE-OUT TRAYS WITH 2" SIDES IN COMPARTMENT-D1,P1,P4
6. CTECH FOUR DRAWER CABINET IN COMPARTMENT-D4
7. CIRCUIT BREAKER PANEL LOCATED IN COMPARTMENT-D4
8. ONE HANNAY ELFCR1622-14-16 3-WIRE ELECTRIC REWIND CORD REEL WITH 200' OF 10/3 CABLE IN PASSENGER SIDE PUMP HOUSE

REV	DATE	BY	CH
B	07MAR16	BST	DTS
A	04FEB16	BST	DTS

CHASSIS DATA
MAKE: PIERCE
MODEL: VELOCITY

Pierce MANUFACTURING INC.

TITLE: 2000-D-2830P W/30 GAL. FOAM CELL,DELUGE,GENERATOR 211" TANKER BODY,ZICO LADDER RACKS,(3) SPEEDLAYS
FOR: LITTLE EGG HARBOR FIRE DISTRICT #2 LITTLE EGG HARBOR, NJ
DWG NO.: 29538AD

JOB NO.	29538
SCALE	1:24
DATE	
DRAWN BY	BST 25NOV15
CHECKED BY	CSH 30NOV15
SHEET SIZE	D
SHEET NO.	1 OF 1

View File Created 07-MAR-2016 10:48:29