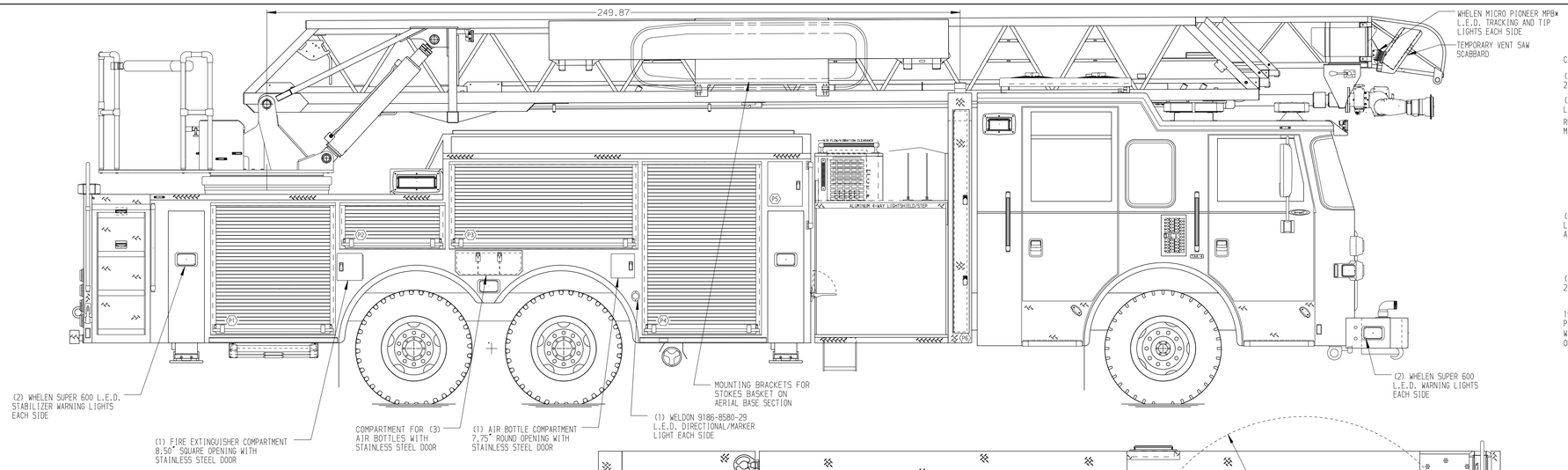

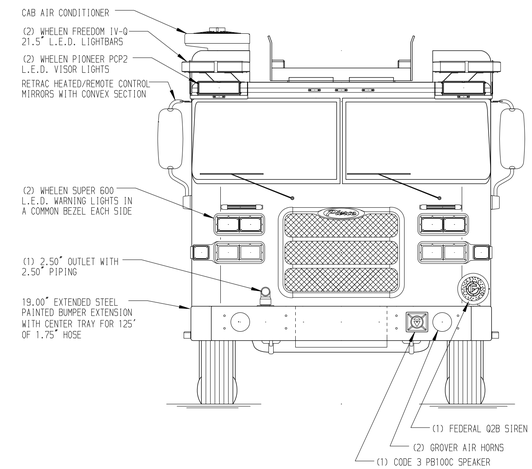

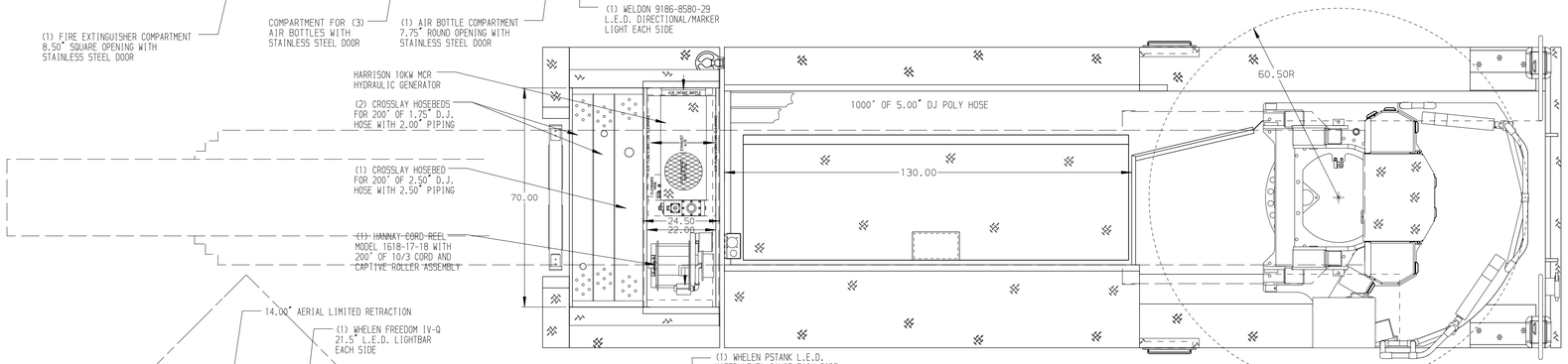

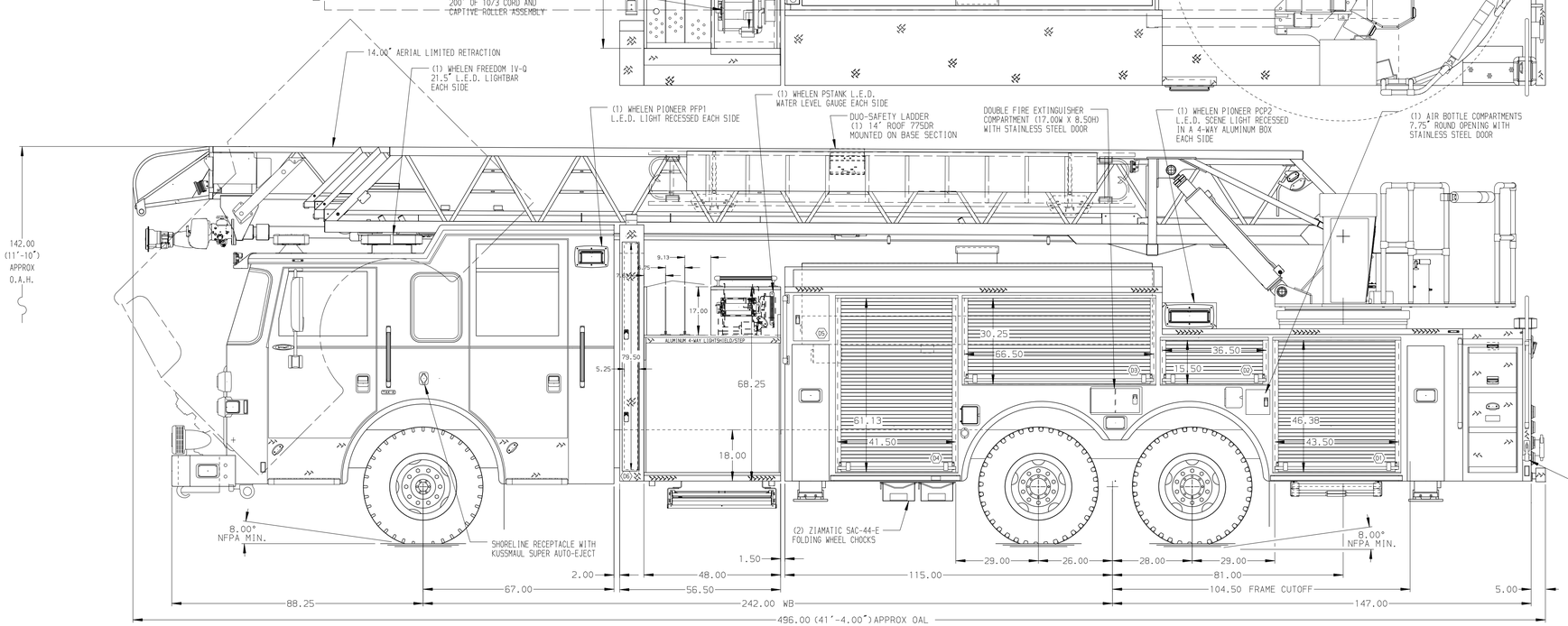

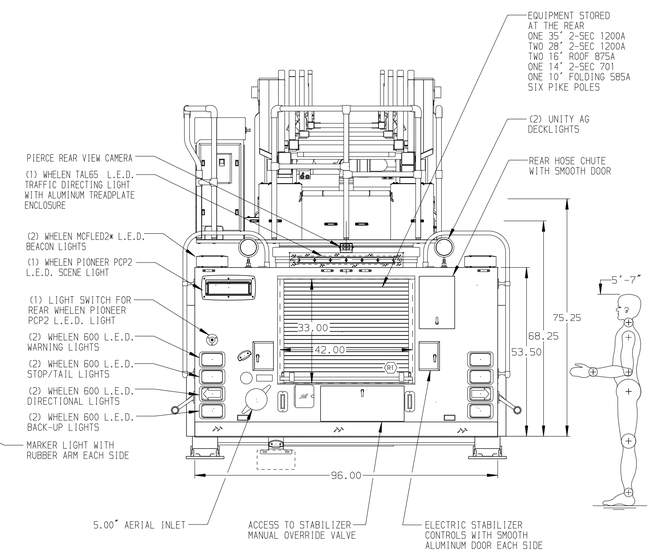

ALUMINUM BODY

NOTE

DIMENSIONS SHOWN ARE APPROXIMATE AND ARE SUBJECT TO MINOR DEVIATIONS AS MAY OCCUR OR BE NECESSARY IN CONSTRUCTION.
MINOR DETAILS NOT SHOWN.

1. REAR WALL CAB EXTERIOR ALUMINUM TREADPLATE
2. BATTERY CHARGER LOCATED IN CREW CAB SEAT RISER
3. BATTERY CHARGE INDICATOR LOCATED NEAR D.S. SEAT RISER WITH BRACKET
4. TWO ADJUSTABLE SHELVES (FULL DEPTH/FULL WIDTH) IN COMPARTMENT D1,D4,P1,P4
5. ONE ADJUSTABLE TILT/SLIDE-OUT BRUSHED ALUMINUM TRAY IN COMPARTMENT D3
6. ONE FLOOR MOUNTED SLIDE-OUT TRAY IN COMPARTMENT P1
7. ONE SWING-OUT TOOL BOARD WITH PEGBOARD PATTERN IN COMPARTMENT P3
8. ONE ALUMINUM SLIDE-OUT TOOLBOARD WITH PEGBOARD PATTERN IN COMPARTMENT D1,D4
9. ONE VERTICAL PARTITION IN COMPARTMENT D1,D4
10. STABILIZERS MODIFIED FOR 18" GROUND PENETRATION
11. L.E.D. LIGHTING ON AERIAL LADDER SECTIONS
12. 2-WAY INTERCOM SYSTEM BETWEEN AERIAL TIP AND TURNTABLE
13. AERIAL PEDESTAL RAISED 3.00"
14. LIFTING EYE RESCUE ATTACHMENT AT AERIAL TIP
15. CIRCUIT BREAKER PANEL IN COMPARTMENT D5

REV	DATE	BY	CH
V	15APR16	JGA	ANG
V	18MAR16	JGA	ANG
V	22JAN16	RPA	JBL

CHASSIS DATA
MAKE: PIERCE
MODEL: ARROW XT

Pierce MANUFACTURING INC.

TITLE: 105 AERIAL LADDER & BODY ASSEMBLY
500 GALLON WATER TANK

FOR: SIMPSONVILLE FIRE DEPARTMENT
SIMPSONVILLE SC

DWG NO.: 29622AD

JOB NO.	SCALE	DRAWN BY	CHECKED BY	SHEET SIZE	SHEET NO.
29622	1:24	RPA	JBL	D	1 OF 1

DATE: 07JAN16
08JAN16

View File Created 19-APR-2016 12:35:11