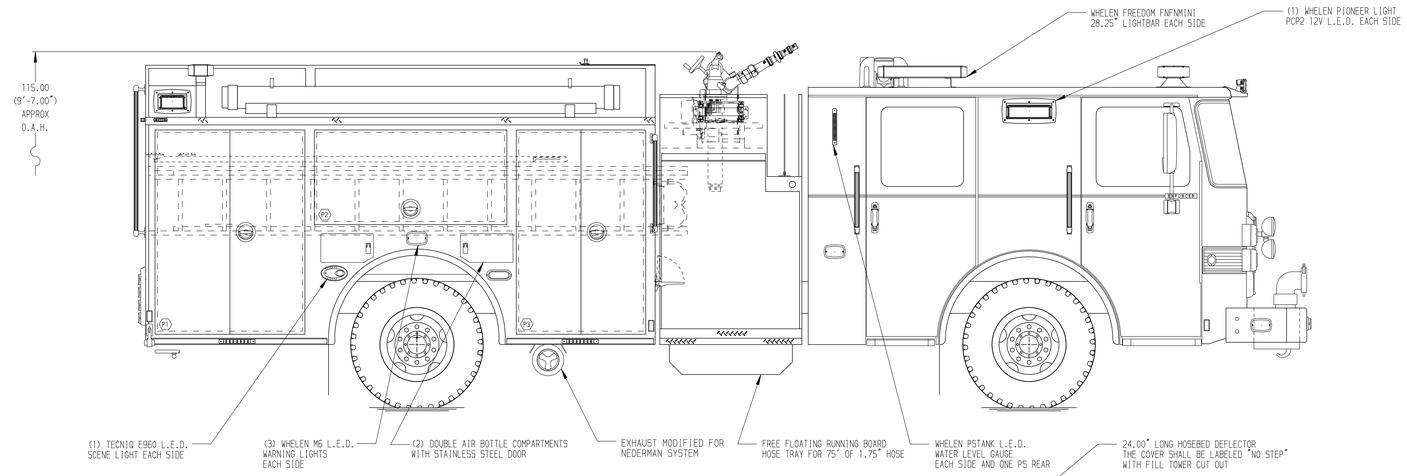

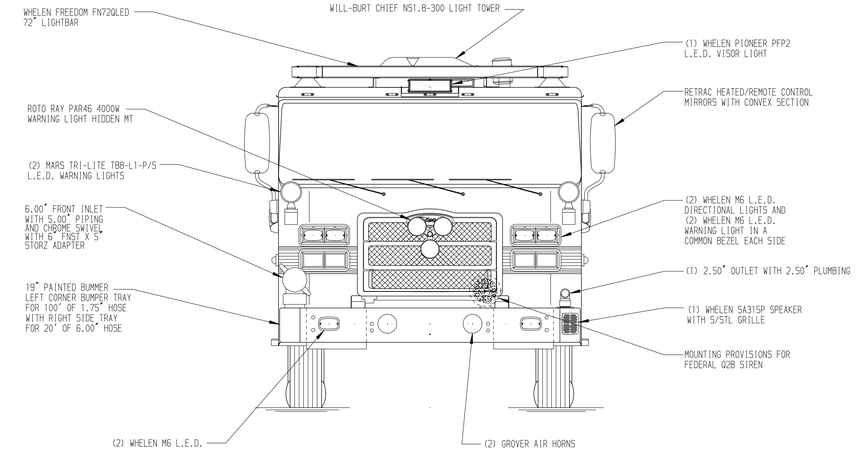

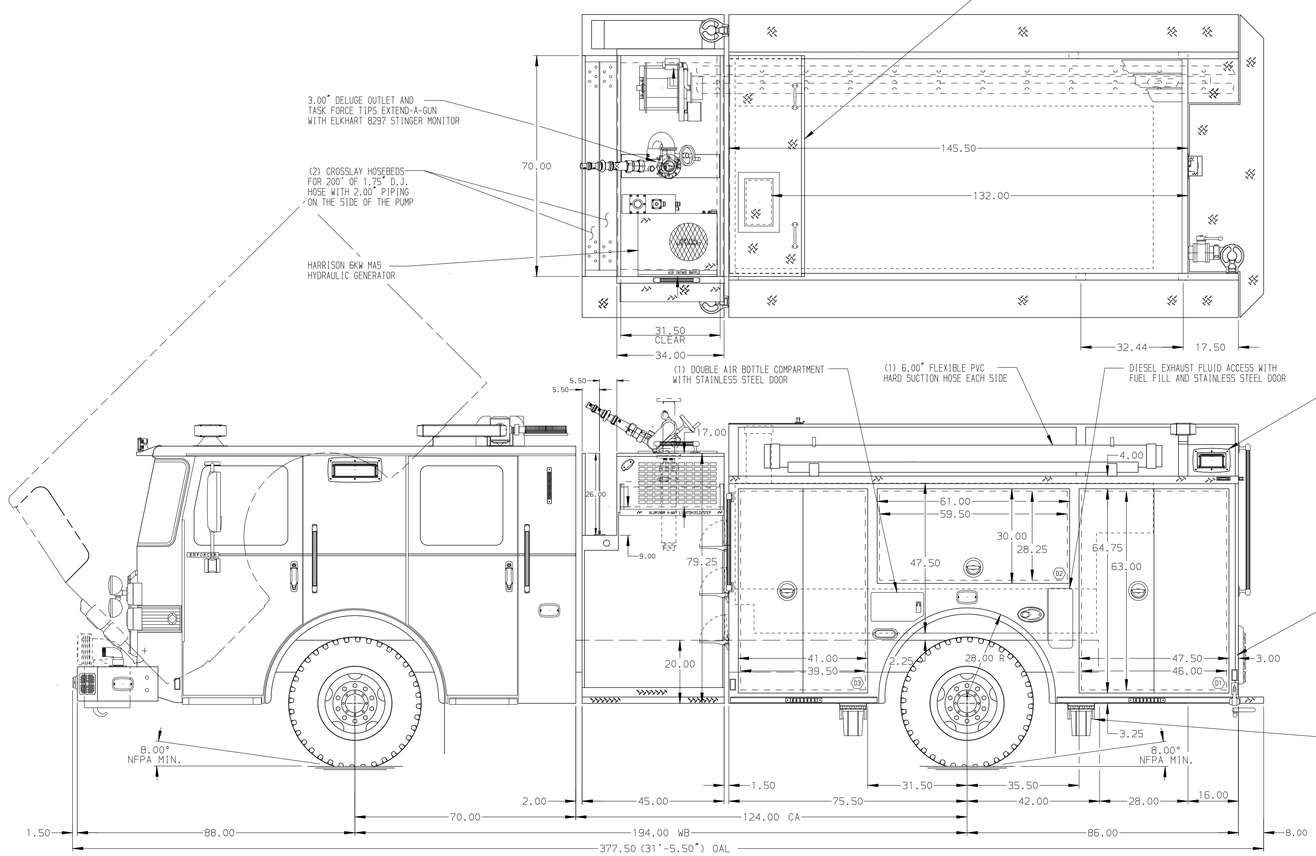

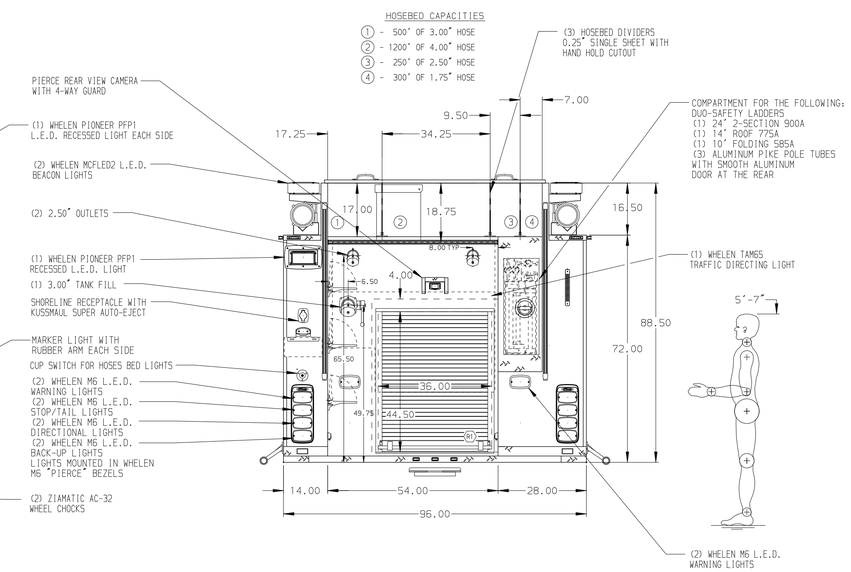

ALUMINUM BODY

MAXIMUM O.A.L. 377.50"

MAXIMUM O.A.H. 115"

NOTE

DIMENSIONS SHOWN ARE APPROXIMATE AND ARE SUBJECT TO MINOR DEVIATIONS AS MAY OCCUR OR BE NECESSARY IN CONSTRUCTION.
MINOR DETAILS NOT SHOWN.

1. ONSPOT AUTOMATIC TIRE CHAINS TO BE PROVIDED AT REAR
2. KUSSMAUL BATTERY CHARGER/AIR COMPRESSOR LOCATED BEHIND THE DRIVERS SEAT
3. ONE ADJUSTABLE SHELF (FULL DEPTH/FULL WIDTH) IN COMPARTMENTS D1, D3, P1, AND P3
4. ONE FLOOR MOUNTED SLIDE-OUT 500 LB TRAY IN COMPARTMENTS D3, P3, AND R1
5. AIR OUTLET ON DS STEP WELL
6. ALUMINUM PEGBOARD WITH TRACKS ON THE REAR WALL OF COMPARTMENTS D2, D3, AND P2
7. CIRCUIT BREAKER PANEL IN COMPARTMENT D3
8. SUB FEED BREAKER BOX IN COMPARTMENT D3
9. ONE HANNAY ELECTRIC REWIND CORD REEL MODEL 1618-17-18 LOCATED IN THE CARGO AREA
10. AIR INLET WITH DISCONNECT COUPLING LOCATED IN DS STEP WELL

REV	DATE	BY	CH
D	08APR16	TES	
C	11MAR16	TES	WKL
B	11MAR16	TES	ANG
A	29JAN16	AMI	WKL

CHASSIS DATA
MAKE: PIERCE
MODEL: ENFORCER

Pierce MANUFACTURING INC.

TITLE: 1500-D-1000P 161" PUMPER BODY, NY STYLE WATERTANK (2)XLAYS, DELUGE, CORD REEL, LADDER ON PS SIDE SHEET

FOR: LIBERTYTOWN VOLUNTEER FIRE DEPARTMENT
LIBERTYTOWN, MARYLAND

DWG NO.: 29717AD

JOB NO.	29717
SCALE 1:24	DATE
DRAWN BY TES	21JAN16
CHECKED BY GRM	22JAN16
SHEET SIZE D	SHEET NO. 1 OF 1

View File Created 15-APR-2016 14:38:06