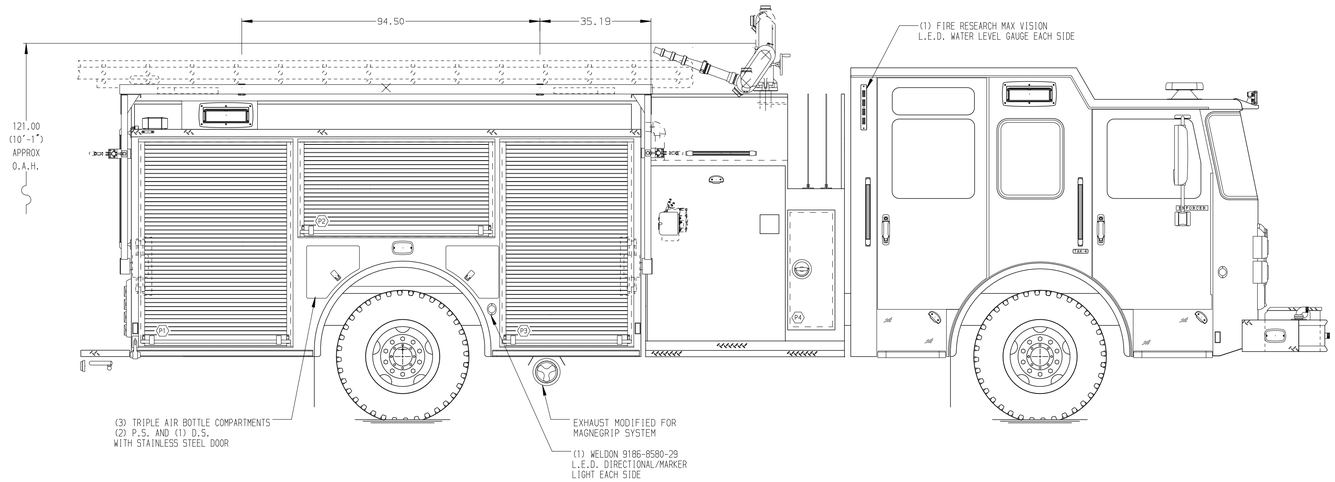


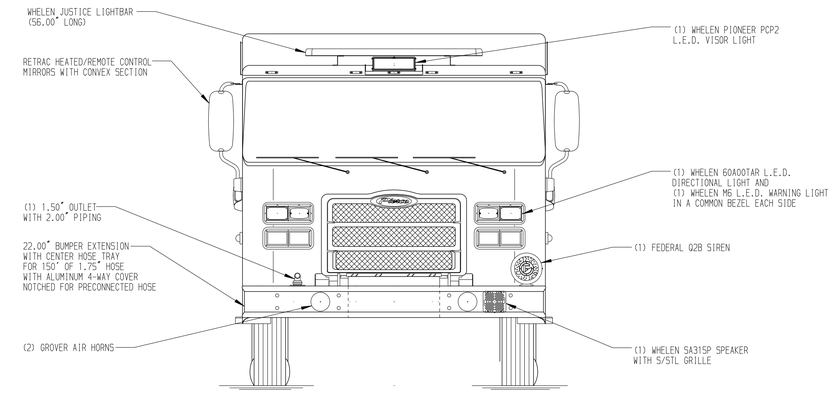


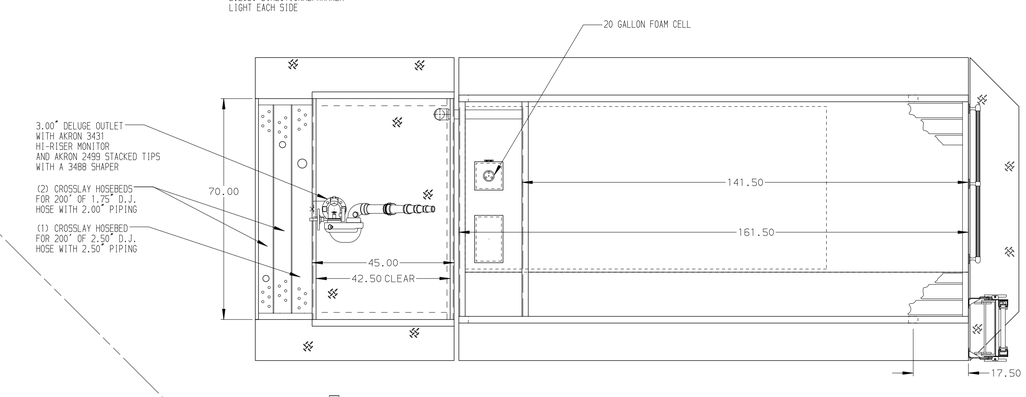


HOSEBED CAPACITIES

1. 850' OF 5.00" D.J. POLY HOSE
2. 400' OF 2.50" D.J. POLY HOSE
2. 300' OF 2.50" D.J. POLY HOSE

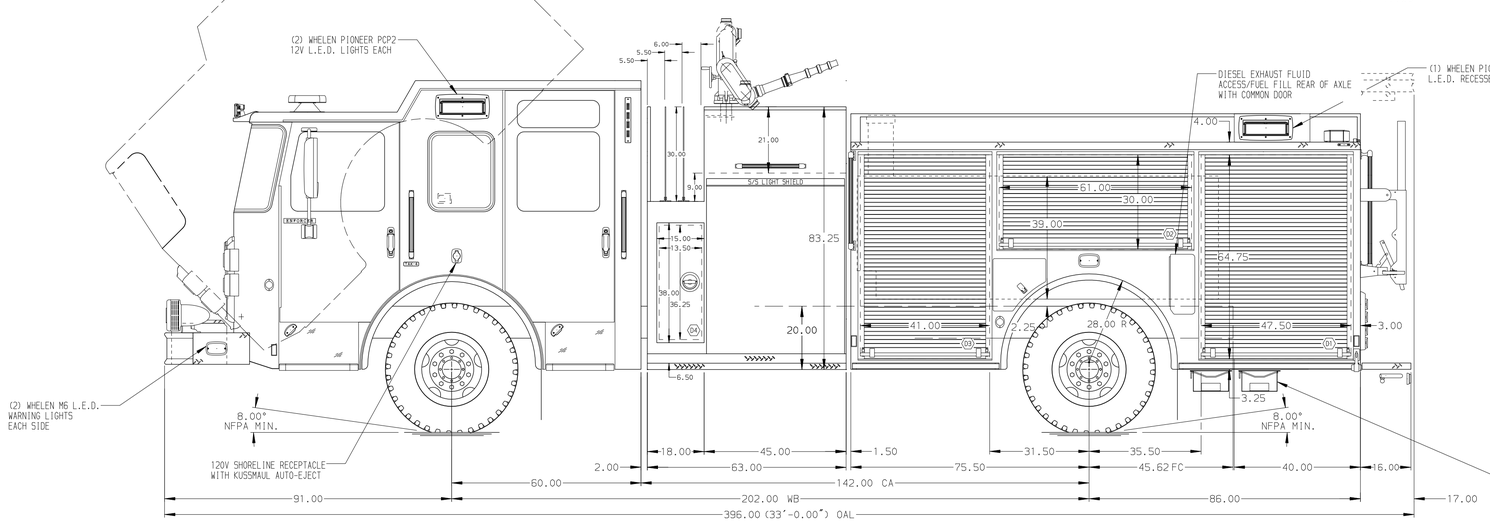


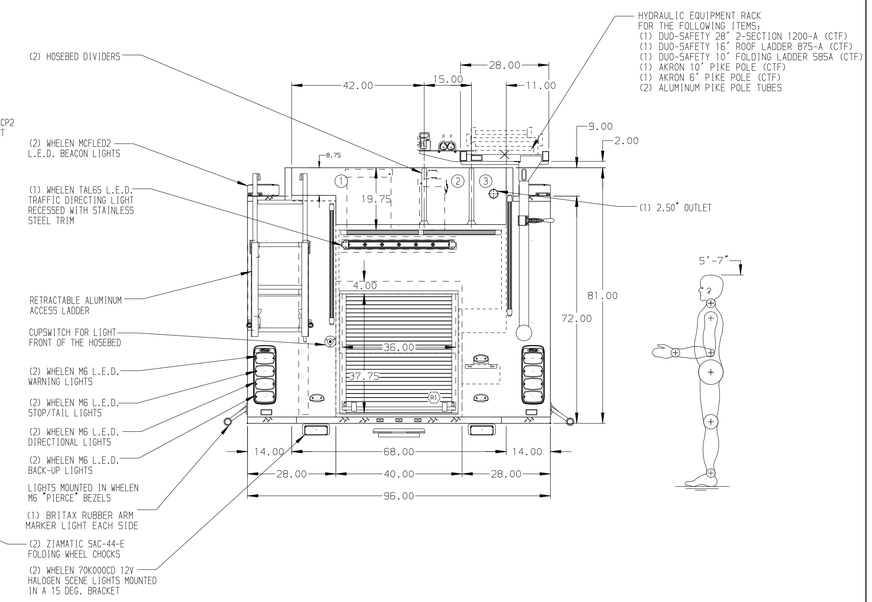


ALUMINUM BODY

SIDE ROLL AND FRONTAL IMPACT PROTECTION

NOTE

DIMENSIONS SHOWN ARE APPROXIMATE AND ARE SUBJECT TO MINOR DEVIATIONS AS MAY OCCUR OR BE NECESSARY IN CONSTRUCTION.
MINOR DETAILS NOT SHOWN.

1. ONSPOT AUTOMATIC TIRE CHAINS TO BE PROVIDED AT REAR
2. KUSSMAUL BATTERY CHARGER/AIR COMPRESSOR IN D3
3. BATTERY CHARGER INDICATOR BEHIND DRIVER'S SEAT DISPLAYED THROUGH WINDOW
4. FULL WIDTH/DEPTH PAINTED ADJUSTABLE SHELVES TWO IN D1,D3,P1,P3 AND ONE IN D2
5. ONE FLOOR MOUNTED SLIDE-OUT TRAY IN R1,P3
6. ALUMINUM SLIDE-OUT TOOLBOARD WITH PEGBOARD PATTERN IN D3
7. SWING-OUT TOOL BOARD WITH PEGBOARD PATTERN IN P2
8. ONE HORIZONTAL PARTITION IN D1
9. ONE VERTICAL PARTITION IN D1,D3
10. FOAM PRO 1600 SINGLE AGENT FOAM SYSTEM LOCATED PER SHOP ORDER
11. HONDA GAS GENERATOR (CTF) IN P3
12. WHELEN 70CDELZR L.E.D. LIGHT LOCATED AT THE FRONT OF THE HOSE BED
13. SIX PLACE RECEPTACLE STRIP IN CENTER FORWARD FACING EMS CABINET AND NEXT TO OFFICERS SIDE ENGINE TUNNEL

| REV | DATE | BY | CH |
|---|---|---|---|
| 3 | 02MAY16 | LST | JBO |
| 2 | 29MAR16 | LST | JBO |

CHASSIS DATA
MAKE: PIERCE
MODEL: ENFORCER

**Pierce MANUFACTURING INC.**

TITLE: 1500-D-770P, 750G WATER W/20G FOAM CELL; 161" PMPR (3)XLAYS; HYDRAULIC LADDER RACK; DELUGE
FOR: CITY OF URBANDALE FIRE DEPARTMENT URBANDALE, IOWA
DWG NO.: 29856AD

| JOB NO. | 29856 |
|---|---|
| SCALE 1:24 | DATE |
| DRAWN BY LST | 13FEB16 |
| CHECKED BY MGE | 15FEB16 |
| SHEET SIZE D | SHEET NO. 1 OF 1 |

View File Created 03-MAY-2016 11:15:11