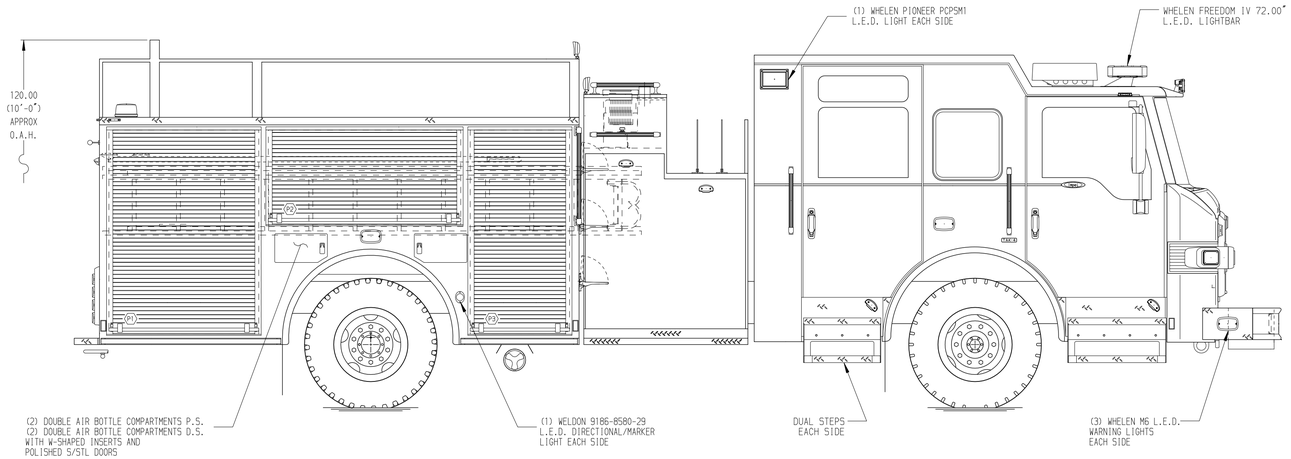

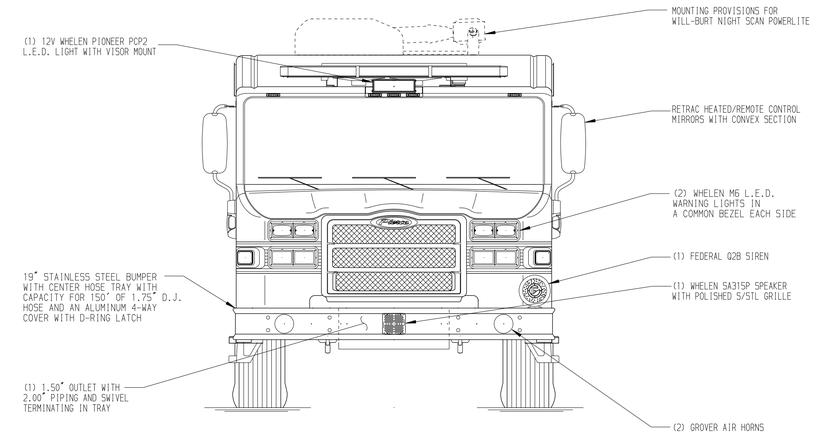

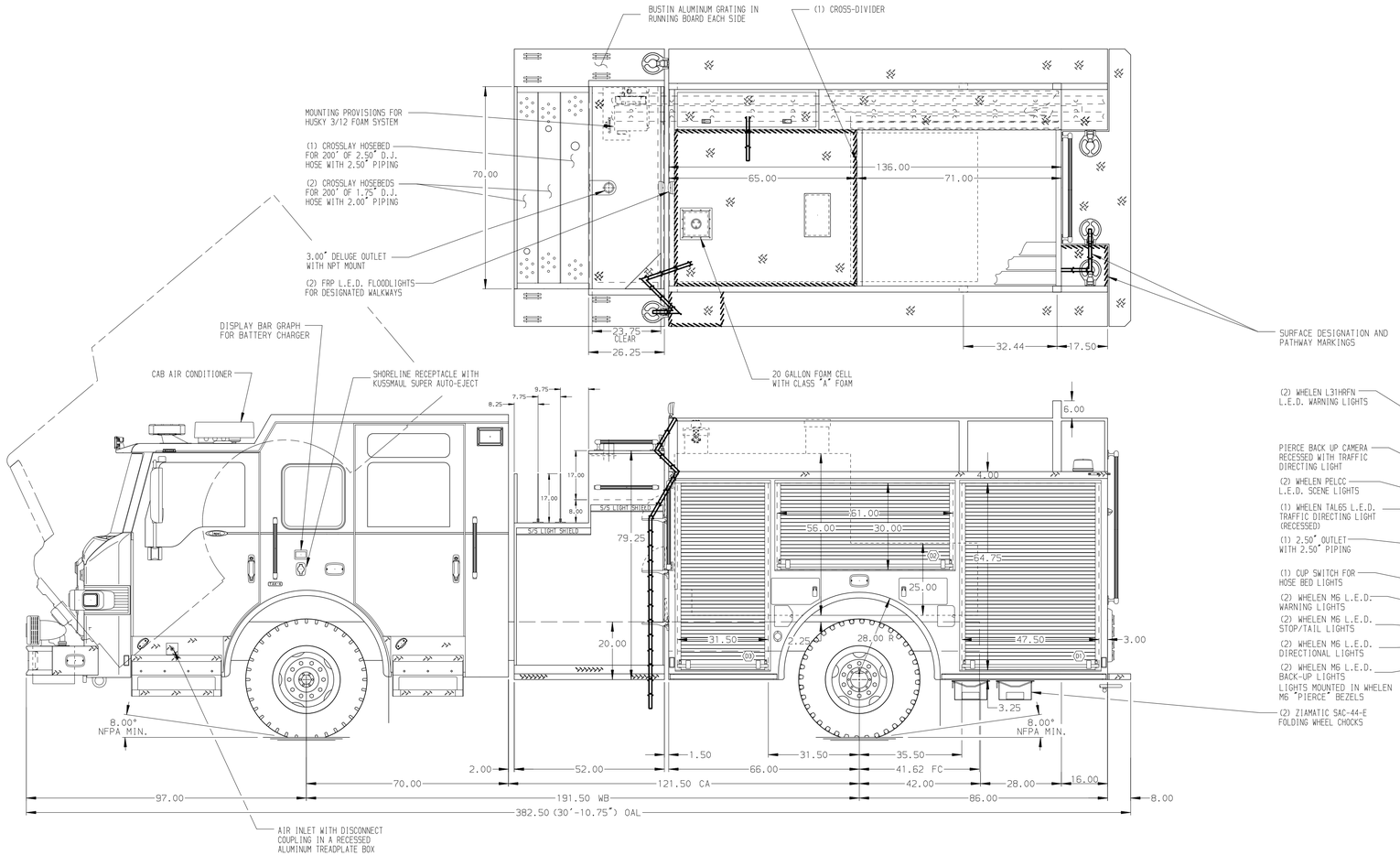

HOSEBED CAPACITIES

1. 500' OF 2.50" D.J. HOSE
2. 1000' OF 5.00" D.J. HOSE
3. 500' OF 2.50" D.J. HOSE

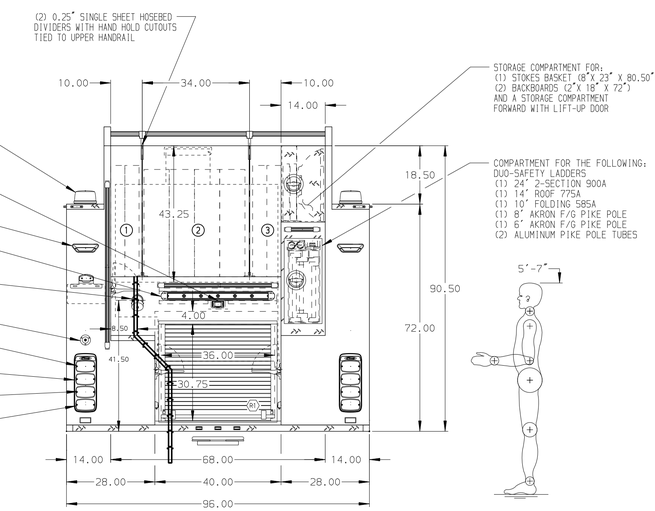

ALUMINUM BODY

SIDE ROLL & FRONTAL IMPACT PROTECTION

NOTE

DIMENSIONS SHOWN ARE APPROXIMATE AND ARE SUBJECT TO MINOR DEVIATIONS AS MAY OCCUR OR BE NECESSARY IN CONSTRUCTION.
MINOR DETAILS NOT SHOWN.

1. BATTERY CHARGER LOCATED IN CREW CAB SEAT RISER
2. FOUR WHELEN 01-0660068-00 12V L.E.D. LIGHTS LOCATED IN THE HOSE BED
3. DRIP PAN GUARD FOR ALL BODY ROLL-UP DOORS
4. PIERCE L.E.D. COMPARTMENT DUAL LIGHT STRIPS LOCATED PER SHOP ORDER
5. ONE FULL WIDTH/DEPTH PAINTED ADJUSTABLE SHELF IN COMPARTMENT D1, D3, P1 & P3
6. ONE FLOOR MOUNTED SLIDE-OUT TRAY IN COMPARTMENT D1, D3, P1 & P3
7. ALUMINUM PEGBOARD WITH TRACKS ON THE REAR WALLS OF COMPARTMENT D2 & P2
8. MOUNTING PROVISIONS FOR FRONT INLET
9. PLUMBING FOR FUTURE FOAM SYSTEM PER SHOP ORDER

REV	DATE	BY	CH
V	22JUL16	TES	THS

CHASSIS DATA
MAKE: PIERCE
MODEL: IMPEL FR

Pierce MANUFACTURING INC.

TITLE: 1500-D-750P W/20 GAL FOAM CELL, 152" FH FDLER BODY (3) XLAYS, LADDERS BESIDE TANK, DELUGE, A/C
FOR: PIERCE FIELD UNIT APPLETON, WISCONSIN
DWG NO.: 30355AD

JOB NO.	30355
SCALE	1:24
DATE	
DRAWN BY	TES 08JUN16
CHECKED BY	THS 13JUN16
SHEET SIZE	D
SHEET NO.	1 OF 1

View File Created 25-JUL-2016 07:15:25