PASSENGER'S SIDE COMPARTMENTS CONTAIN THE FOLLOWING:

COMPARTMENT P1 CONTAINS:
- (1) STD DEPTH ADJ SLIDE OUT/TILT TRAY
- (1) FLOOR MOUNTED TRAY WITH SIDE SLIDES AND TOOLBOARD
- (1) HYDRAULIC REEL W/150' OF HOSE
- (1) SLIDE OUT ROLLER GUIDE BRACKET
- (1) SWITCH FOR 30A,240V RECEPTACLE
- PEGBOARD ON BOTH SIDE WALLS
-

COMPARTMENT P2 CONTAINS:
- (1) 3/4 DEPTH SLIDE OUT TOOLBOARD
- (1) 3/4 DEPTH SLIDE OUT TRAY
- (1) PLYWOOD RACK
-

COMPARTMENT P3 CONTAINS:
- (1) HORIZONTAL FLOOR EXTENSION
- (1) FLOOR MOUNTED TRAY W/SIDE SLIDES
- (4) POLY TOOL BOXES
- (1) 1/2 DEPTH ADJ SLIDE OUT/TILT TRAY
- (1) VERTICAL COMPARTMENT PEGBOARD DIVIDER
- (1) 1/2 DEPTH ADJ SLIDE OUT TRAY
- (1) 2-WAY ADJ SLIDE OUT TRAY WITH MULTI-STOP(LOWER)
- (1) 2-WAY SLIDE OUT TOOLBOARD
-
-

COMPARTMENT P4 CONTAINS:
- (1) HORIZONTAL FLOOR EXTENSION
- (1) 1/2 DEPTH ADJ SLIDE OUT/TILT TRAY
- (1) 1/2 DEPTH ADJ SLIDE OUT TRAY
- (1) ELECTRIC CORD REEL WITH 200' OF 10/4 YELLOW CORD
- (1) 15A, 120V DUPLEX RECEPTACLE
- (1) 2-WAY ADJ SLIDE OUT TRAY WITH MULTI-STOP(LOWER)
- (1) TOOL AIR REEL WITH 150' OF HOSE
- (2) SLIDE OUT ROLLER GUIDE BRACKETS
- (1) 3-DRAWER C-TECH CABINET
-

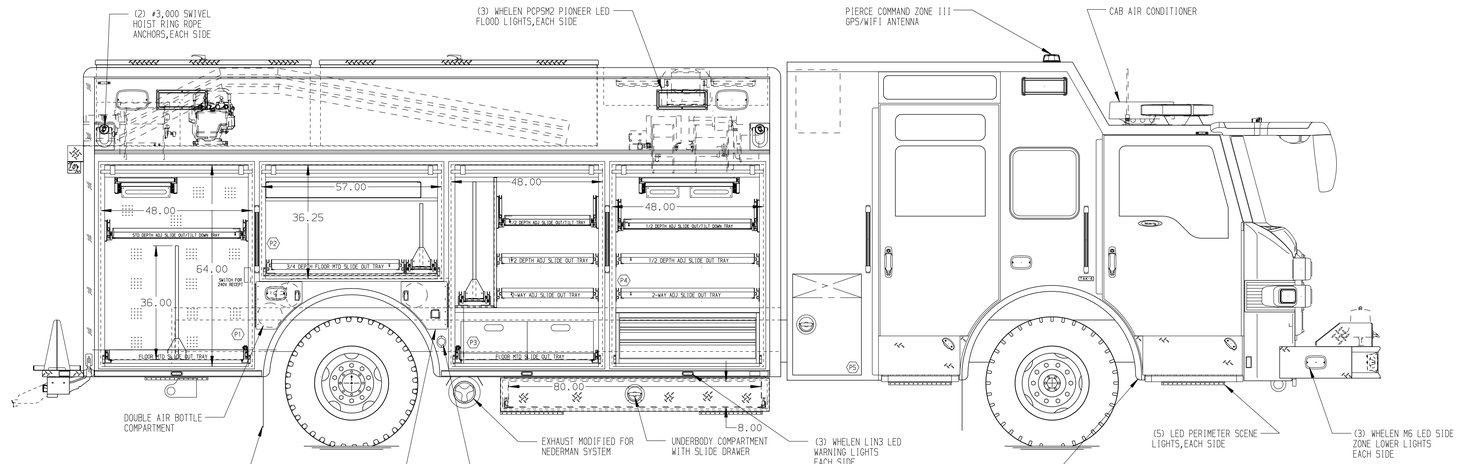

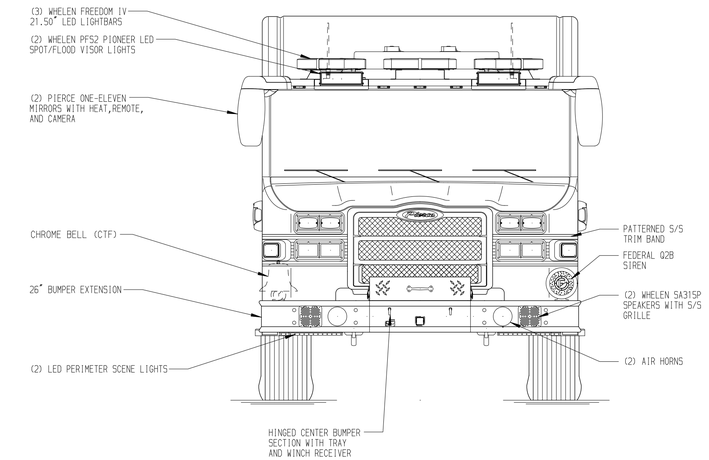

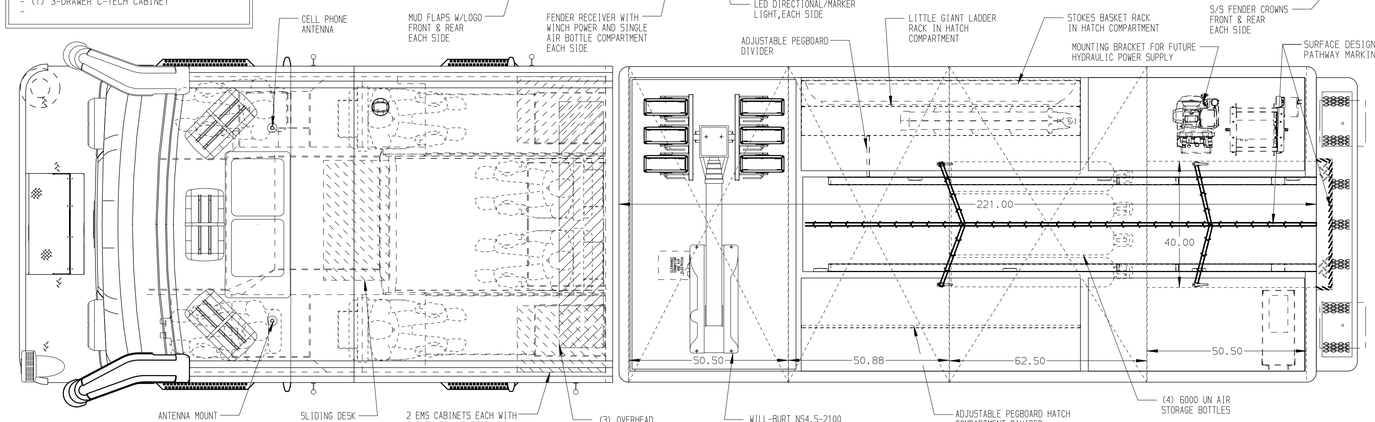

DRIVER'S SIDE COMPARTMENTS CONTAIN THE FOLLOWING:

COMPARTMENT D1 CONTAINS:
- (1) OIL DRY HOPPER
- (1) STD DEPTH ADJ SHELF
- (3) FLOOR MOUNTED TRAYS WITH SIDE SLIDES AND TOOLBOARD
- (1) HYDRAULIC REEL W/150' OF HOSE
- (1) SLIDE OUT ROLLER GUIDE BRACKET
-

COMPARTMENT D2 CONTAINS:
- (1) PLYWOOD RACK
- (1) CASCADE SYSTEM CONTROL PANEL
- (1) "SPACESAVER"2-BOTTLE FILL ENCLOSURE
- (1) CIRCUIT BREAKE PANEL
- (1) SUB FEED BOX
- (1) GENERATOR METER PANEL
- (1) PEGBOARD REAR WALL DIVIDER

COMPARTMENT D3 CONTAINS:
- (1) HORIZONTAL FLOOR EXTENSION
- (1) FLOOR MOUNTED TRAY W/SIDE SLIDES
- (8) POLY TOOL BOXES
- (1) 1/2 DEPTH ADJ SLIDE OUT/TILT TRAY
- (1) VERTICAL COMPARTMENT PEGBOARD DIVIDER
- (1) 1/2 DEPTH ADJ SLIDE OUT TRAY
- (1) 2-WAY ADJ SLIDE OUT TRAY WITH MULTI-STOP(LOWER)
- (1) 2-WAY SLIDE OUT TOOLBOARD
- (1) 15A,120V DUPLEX RECEPTACLE
-

COMPARTMENT D4 CONTAINS:
- (1) HORIZONTAL FLOOR EXTENSION
- (1) FLOOR MOUNTED TRAY W/SIDE SLIDES
- (8) POLY TOOL BOXES
- (1) 1/2 DEPTH ADJ SLIDE OUT/TILT TRAY
- (1) 1/2 DEPTH ADJ SLIDE OUT TRAY
- (1) ELECTRIC CORD REEL WITH 200' OF 10/4 YELLOW CORD
- (1) 15A, 120V DUPLEX RECEPTACLE
- (1) 2-WAY ADJ SLIDE OUT TRAY WITH MULTI-STOP(LOWER)
- (1) IOTA 75 AMP BATTERY CHARGER
- (1) TOOL AIR REEL WITH 150' OF HOSE
- (2) SLIDE OUT ROLLER GUIDE BRACKETS

REAR COMPARTMENT CONTAINS THE FOLLOWING:

COMPARTMENT R1 CONTAINS:
- (1) FLOOR MOUNTED TRAY W/SIDE SLIDES
- (2) 48"DP ADJ SLIDE OUT TRAYS
- (10) POLY TOOL BOXES
- (1) 15A, 120V DUPLEX RECEPTACLE
-
-
-

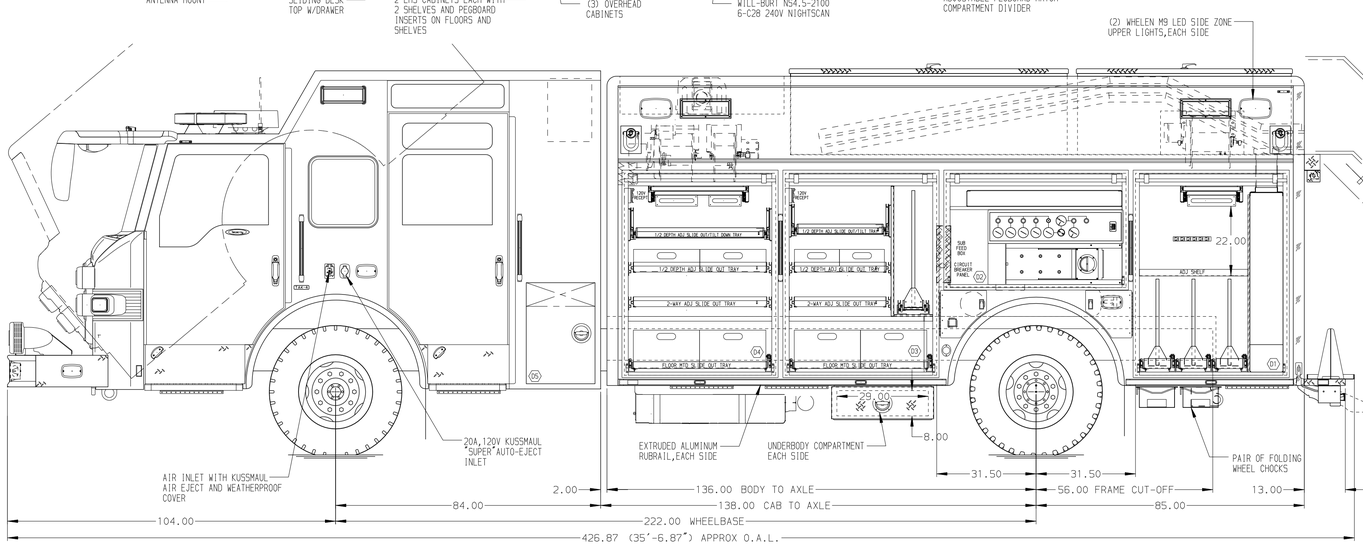

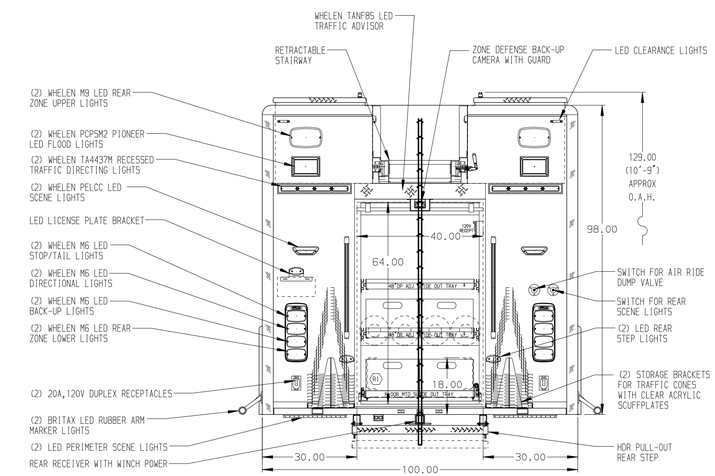

NOTE

DIMENSIONS SHOWN ARE APPROXIMATE AND ARE SUBJECT TO MINOR DEVIATIONS AS MAY OCCUR OR BE NECESSARY IN CONSTRUCTION.
MINOR DETAILS NOT SHOWN.

NOTES:
1. ONSPOT AUTOMATIC TIRE CHAINS
2. POLISHED S/S SCUFFPLATES ON CAB AND CREW CAB DOOR JAMBS
3. FLOOR IN CAB AND CREW CAB TO BE PADDED RUBBER
4. POLISHED S/S ON REAR CORNERS OF THE BODY
5. S/S GUARDS ON ALL ROLL-UP DOORS
6. BATTERY CHARGE INDICATOR LOCATED ON THE DRIVER'S SEAT
7. LED STRIP LIGHTS IN ALL BODY AND HATCH COMPARTMENTS
8. PULL STRAPS ON ALL ROLL-UP DOORS
9. ONAN 15KW SINGLE PHASE PTO DRIVEN GENERATOR WITH SPLASH GUARD LOCATED BETWEEN THE FRAME RAILS

SIDE ROLL AND FRONTAL IMPACT PROTECTION

CLEAR DOOR WIDTH KEY

AMDOR ROLL UP DOORS:	-1 7/8"
GORTITE ROLL UP DOORS:	-2 3/4"
PIERCE DOUBLE LAP DOORS:	-4 1/4"
PIERCE LIFT-UP LAP DOORS:	-1 1/2"

(EX: 60"F-F - 1 7/8"= 58 1/8" CLEAR)
(F-F)= FRAME TO FRAME

REV	DATE	BY	CH
5	24APR17	DHE	CDK
4	02MAR17	DHE	CDK
3	11JAN17	DHE	CDK

CHASSIS DATA
MAKE: PIERCE
MODEL: VXFR8420

Pierce MANUFACTURING INC.

TITLE: HEAVY DUTY RESCUE NON-WALKIN
FOR: SYLVAN LAKE FIRE DEPARTMENT, SYLVAN LAKE, AB
DWG NO.: 30417AD

JOB NO.	30417
SCALE	1:24
DATE	
DRAWN BY	DHE 22DEC16
CHECKED BY	CDK 30DEC16
SHEET SIZE	D
SHEET NO.	1 OF 1

View File Created 25-APR-2017 10:34:19