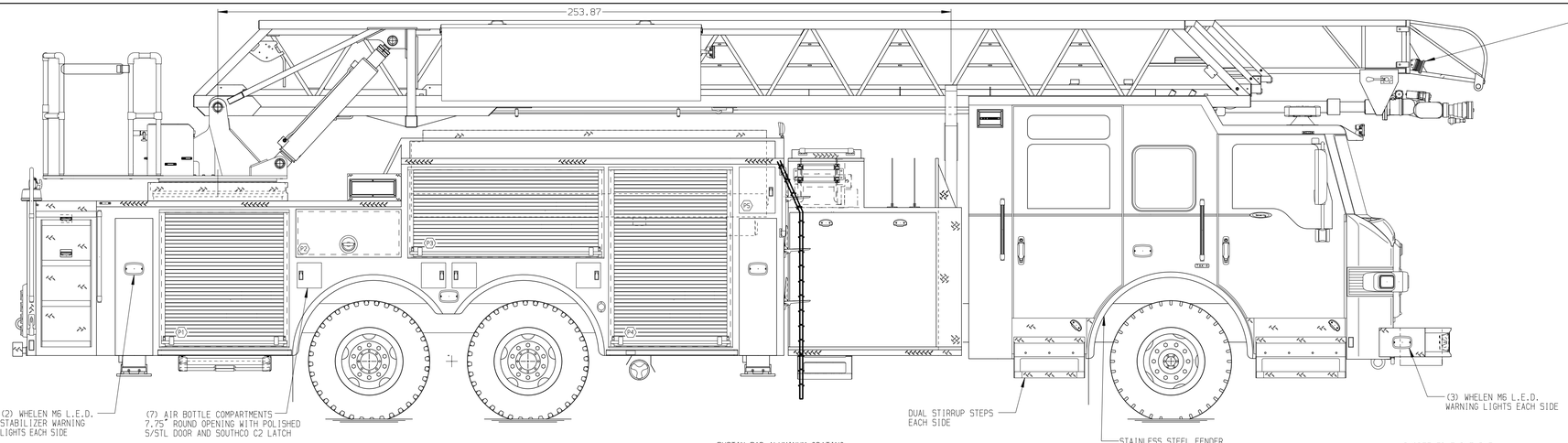

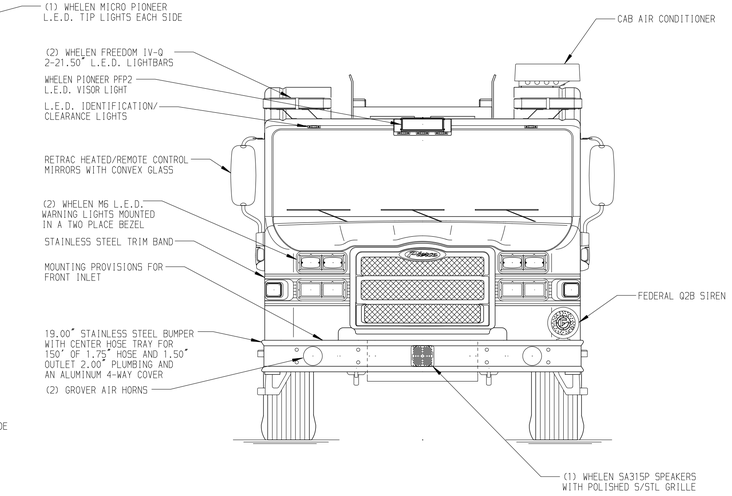

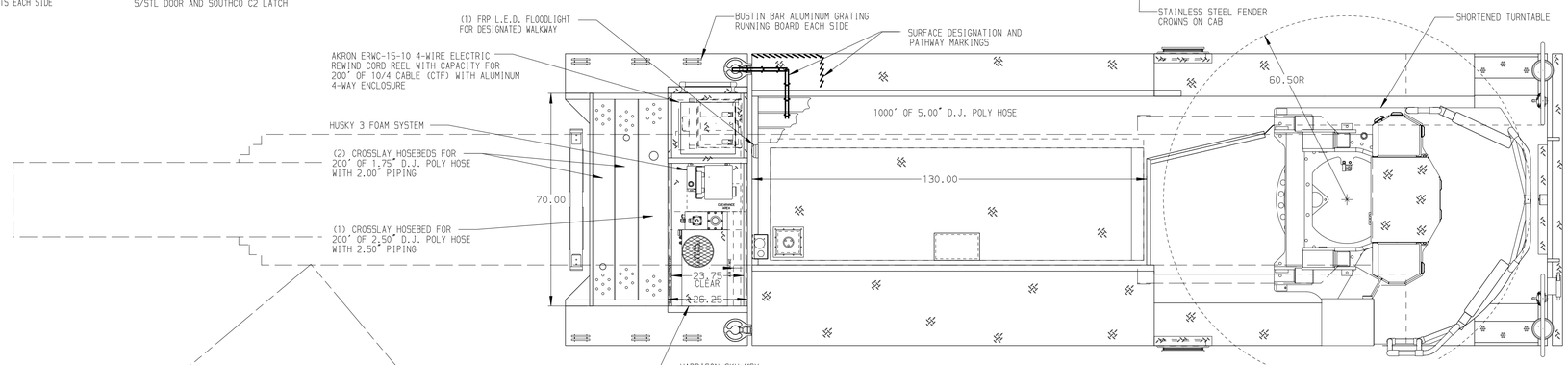

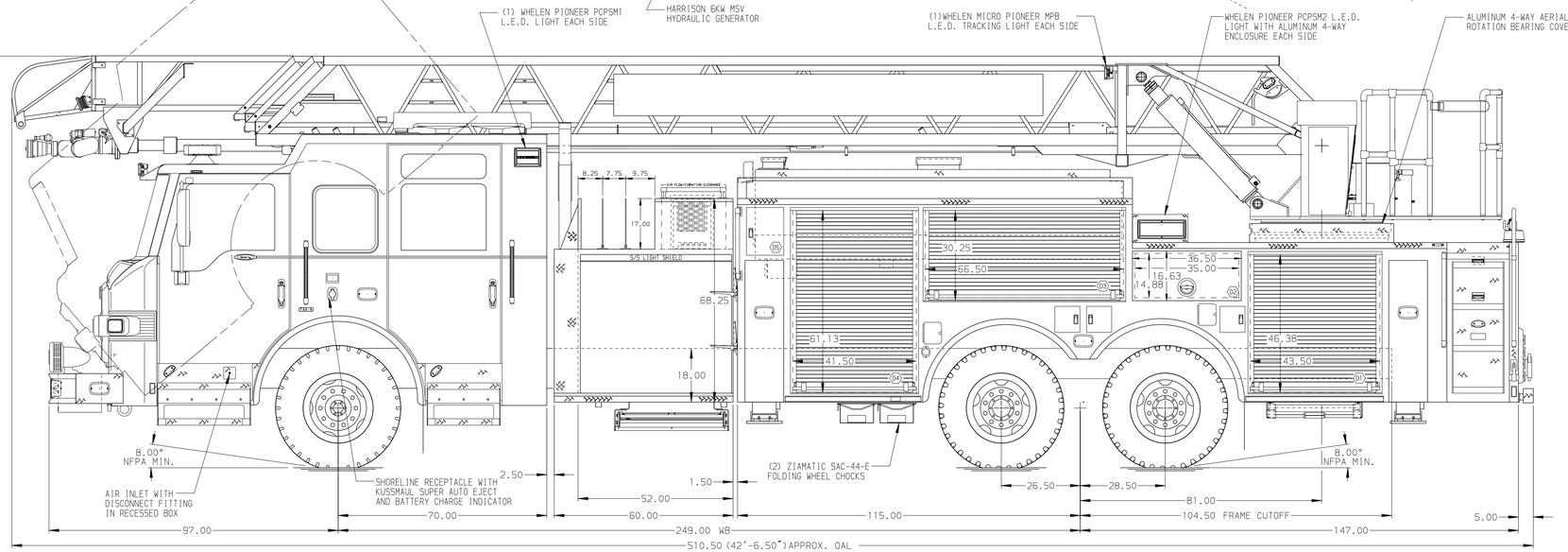

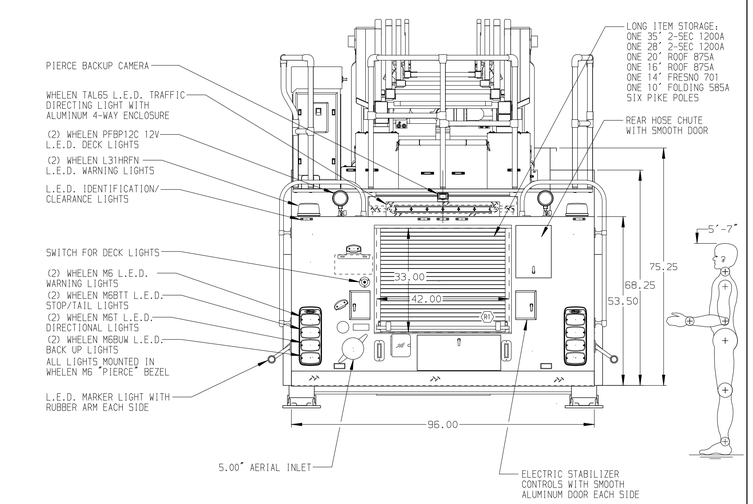

ALUMINUM BODY

SIDE ROLL & FRONTAL IMPACT PROTECTION

NOTE

DIMENSIONS SHOWN ARE APPROXIMATE AND ARE SUBJECT TO MINOR DEVIATIONS AS MAY OCCUR OR BE NECESSARY IN CONSTRUCTION.
MINOR DETAILS NOT SHOWN.

1. EXTERIOR REAR WALL OF CAB ALUMINUM TREADPLATE
2. BATTERY CHARGER SHALL BE LOCATED IN THE CREW CAB SEAT RISER.
3. PROVISION FOR FRONT INLET
4. S/STL PROTECTIVE GUARD FOR ROLL-UP DOOR IN COMPARTMENT D1,D3,D4,P1,P3,P4
5. AMDOR L.E.D. DUAL LIGHT STRIPS IN COMPARTMENTS PER SHOP ORDER
6. TWO P25 LED LIGHTS IN COMPARTMENTS D5,P5
7. PAINTED SHELF TRACKS IN COMPARTMENT D1,D3,D4,P1,P3,P4
8. ONE FULL WIDTH/DEPTH ADJUSTABLE PAINTED SHELF IN COMPARTMENT D1,P1,P3 & TWO IN D4,P4
9. ONE FLOOR MOUNTED SLIDE-OUT TRAY IN COMPARTMENTS D1,D4,P1,P4
10. ONE ADJUSTABLE TILT/SLIDE-OUT TRAY IN COMPARTMENT D3
11. CIRCUIT BREAKER PANEL IN COMPARTMENT D5
12. TRIDENT FOLDING STEPS MOUNTED ON AERIAL DEVICE PER SHOP ORDER
13. 28.50" LIMITED RETRACTION
14. L.E.D. LIGHTING ON AERIAL LADDER SECTIONS
15. FIRE RESEARCH 2-WAY RADIO INTERCOM SYSTEM MOUNTED PER SHOP ORDER
16. AERIAL PEDESTAL RAISED 3.00"
17. COLLISION AVOIDANCE CONTROL SYSTEM ON AERIAL DEVICE
18. STABILIZERS MODIFIED FOR 18.00" GROUND PENETRATION
19. LIFTING EYE RESCUE ATTACHMENT AT AERIAL TIP

REV	DATE	BY	CH
V	01FEB17	MWA	THS

CHASSIS DATA
MAKE: PIERCE
MODEL: VELOCITY FR

Pierce MANUFACTURING INC.

TITLE: 105' HSL AERIAL LADDER AND BODY ASSEMBLY
520 GALLON NOTCHED TANK-500 GAL. WATER/20 GAL. FOAM

FOR: PIERCE MANUFACTURING
APPLETON, WI

DWG NO.: 30622AD

JOB NO.	30622
SCALE	1:24
DATE	
DRAWN BY	MWA
	15SEP16
CHECKED BY	DJS
	16SEP16
SHEET SIZE	D
SHEET NO.	1 OF 1

View File Created 01-FEB-2017 10:04:23