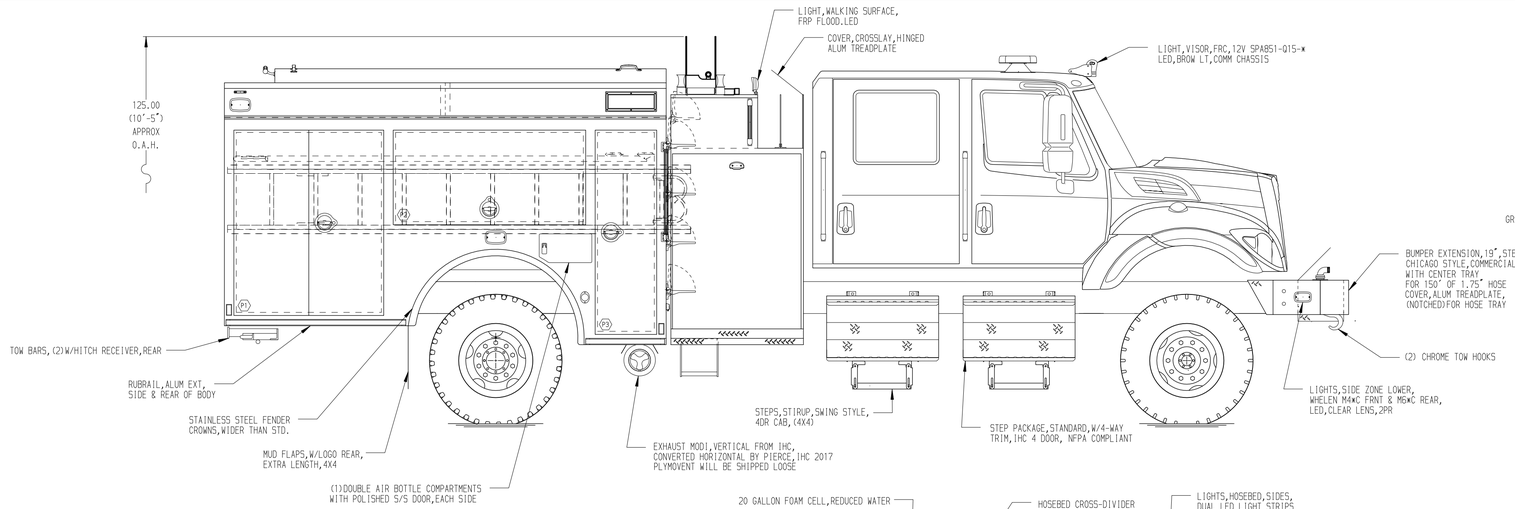

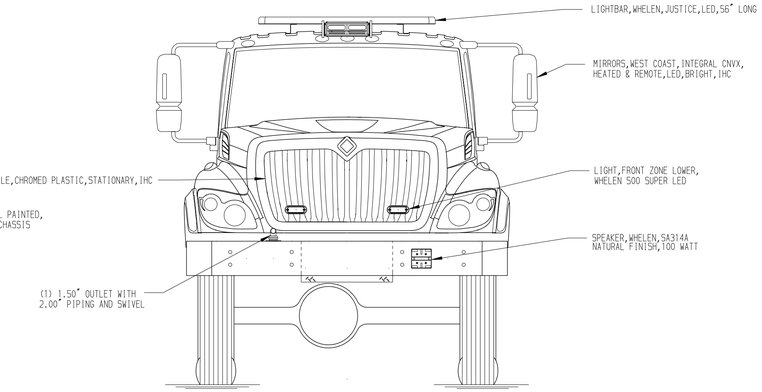

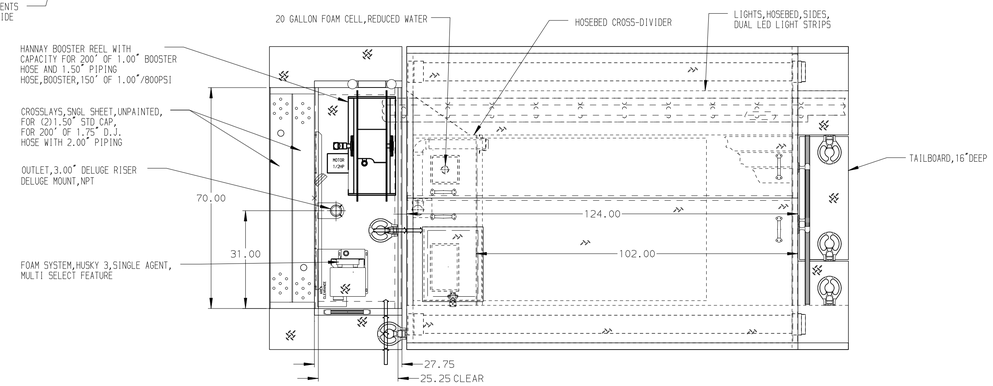

HOSEBED CAPACITIES

1. 400' OF 2.50" D.J. HOSE
2. 600' OF 4.00" LDH HOSE

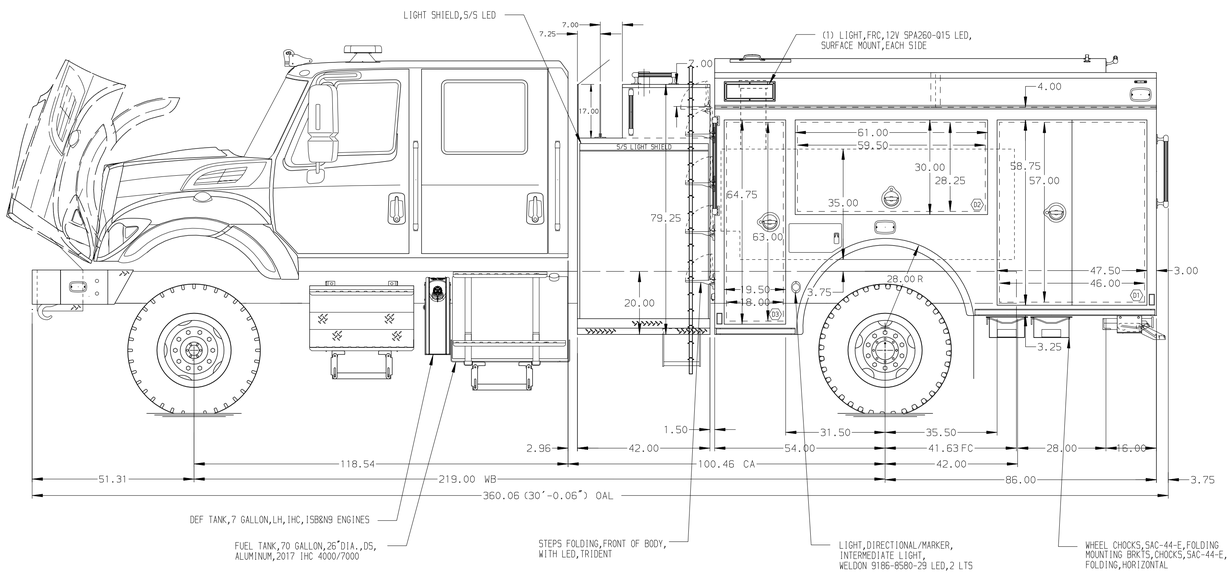

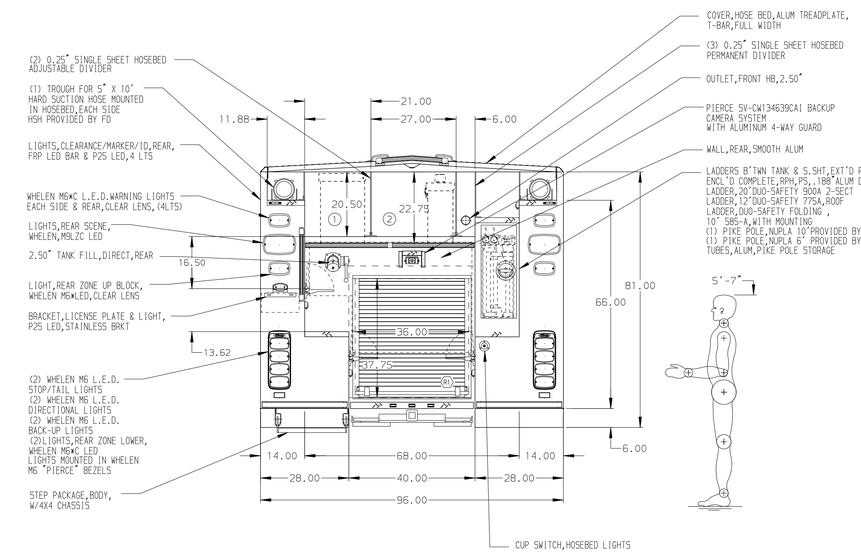

NOTE

DIMENSIONS SHOWN ARE APPROXIMATE AND ARE SUBJECT TO MINOR DEVIATIONS AS MAY OCCUR OR BE NECESSARY IN CONSTRUCTION.
MINOR DETAILS NOT SHOWN.

REV	DATE	BY	CH
V	06JUN17	RWI	DDR
B	06APR17	JLA	DDR
V	22DEC16	JLA	DDR

CHASSIS DATA	
MAKE	IHC
MODEL	7300 4X4

Pierce MANUFACTURING INC.

TITLE	1000-D-500P W/20 GAL FOAM CELL,140"FH,FDLER 6"RR 42"SIDE MOUNT,(2)1.5"CROSSLAYS
FOR	SANFORD FIRE DEPARTMENT,ME SANFORD, MAINE
DWG NO.	30723AD

JOB NO.	30723
SCALE	1:24
DATE	
DRAWN BY	JLA 17NOV16
CHECKED BY	DDR 02DEC16
SHEET SIZE	D
SHEET NO.	1 OF 1

View File Created 06-JUN-2017 08:18:23