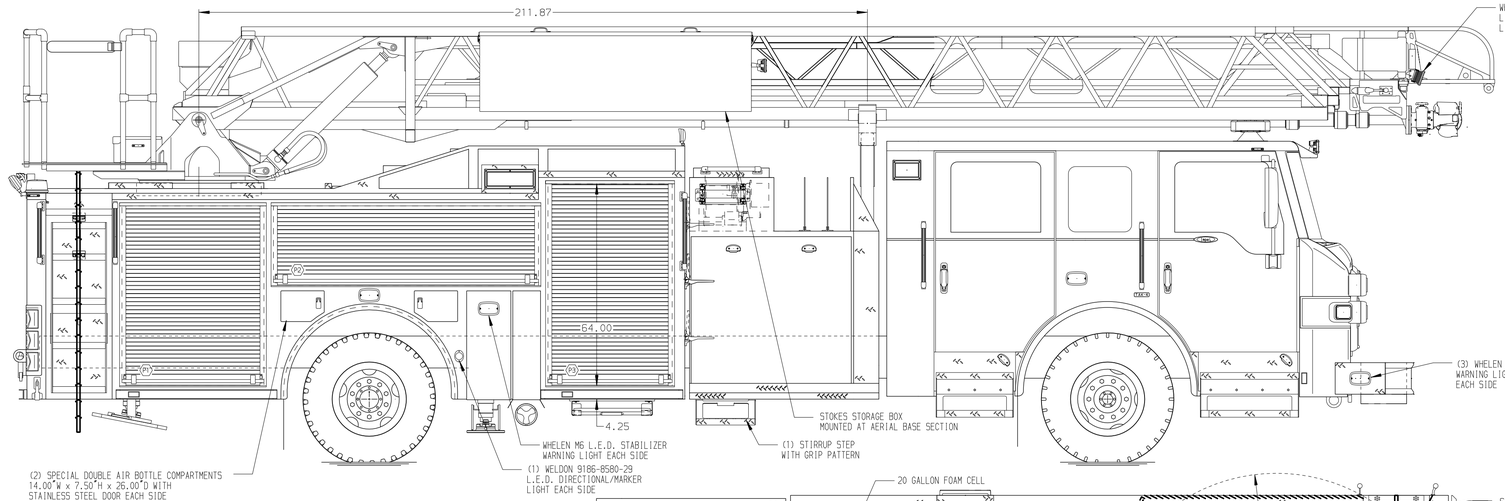

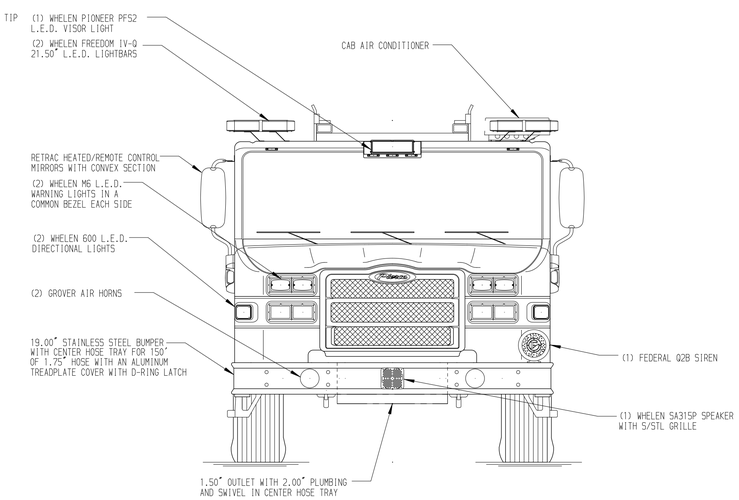

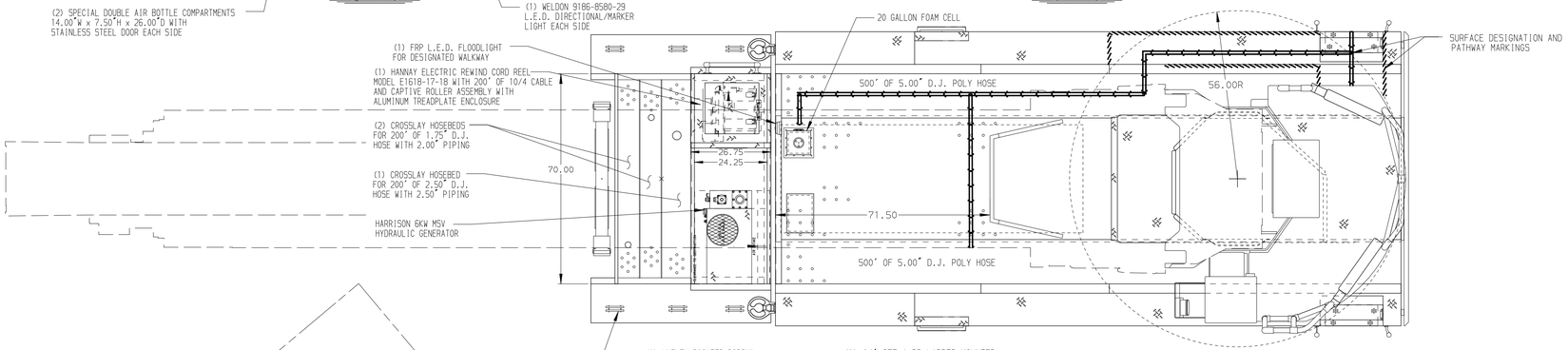

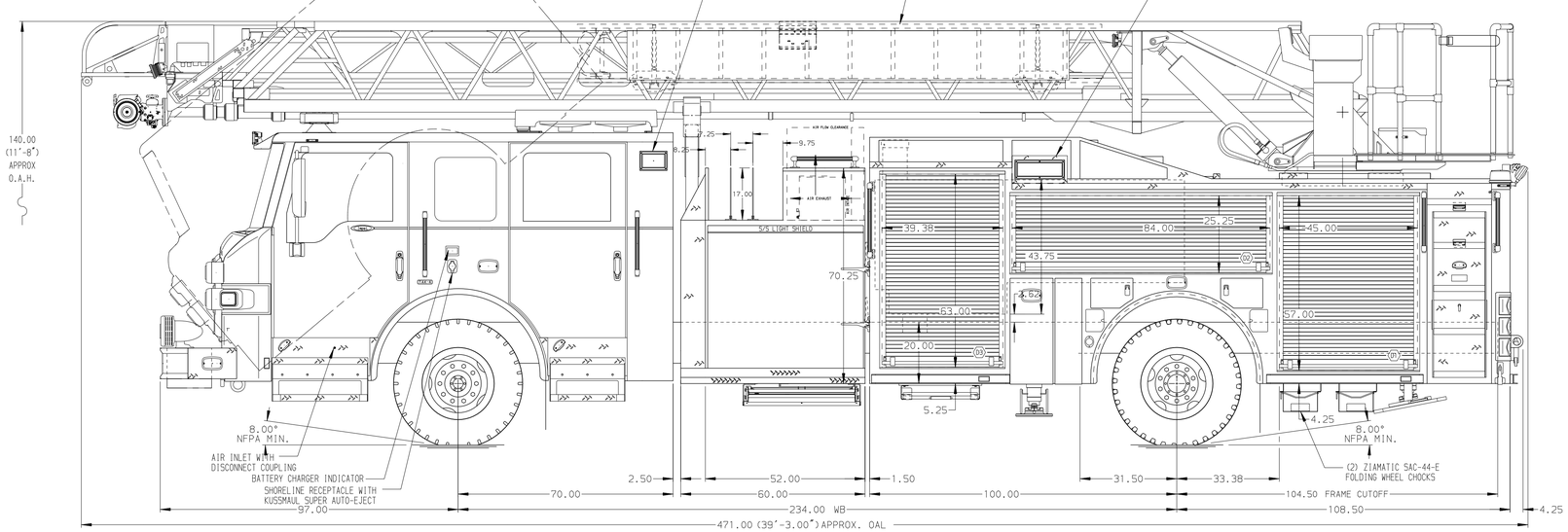

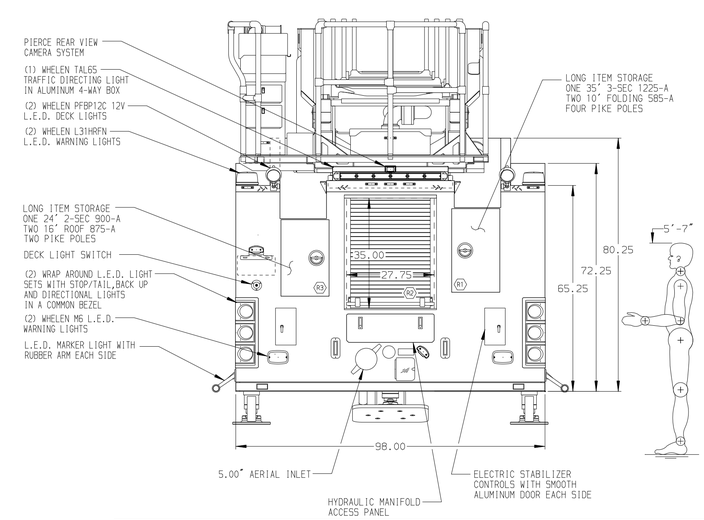

ALUMINUM BODY

NOTE

DIMENSIONS SHOWN ARE APPROXIMATE AND ARE SUBJECT TO MINOR DEVIATIONS AS MAY OCCUR OR BE NECESSARY IN CONSTRUCTION.
MINOR DETAILS NOT SHOWN.

1. BATTERY CHARGER LOCATED IN SEAT BOX
2. 2-WAY INTERCOM SYSTEM BETWEEN AERIAL TIP AND TURNTABLE
3. SPREADER BAR FOR LIFTING EYE RESCUE ATTACHMENT AT AERIAL TIP
4. ONE ADJUSTABLE FULL WIDTH/FULL DEPTH SHELF IN COMPARTMENTS D1,D2,D3,P1,P2,P3
5. ONE FLOOR MOUNTED SLIDE-OUT TRAY IN COMPARTMENTS D1,D3,P1,P3
6. CIRCUIT BREAKER PANEL IN COMPARTMENT D3
7. PLUMBING FOR FUTURE HUSKY 3/12 FOAM SYSTEM
8. TRIDENT FOLDING STEPS MOUNTED ON AERIAL DEVICE
9. L.E.D. LIGHTING ON AERIAL LADDER SECTIONS
10. 120V DUPLEX RECEPTACLE AT THE AERIAL TIP
11. 1500 GPM HIGH FLOW WATERWAY

REV	DATE	BY	CH
V	29NOV16	MWA	THS

CHASSIS DATA
MAKE: PIERCE
MODEL: IMPEL

Pierce MANUFACTURING INC.

TITLE: 107' ASCENDANT HSL AERIAL LADDER AND BODY ASSEMBLY
500 GALLON TANK - 480 WATER/20 FOAM

FOR: PIERCE FIELD UNIT
APPLETON, WI

DWG NO. 30764AD

JOB NO.	30764
SCALE	1:24
DATE	
DRAWN BY	MWA 170CT16
CHECKED BY	THS 170CT16
SHEET SIZE	D
SHEET NO.	1 OF 1

View File Created 29-NOV-2016 14:40:12