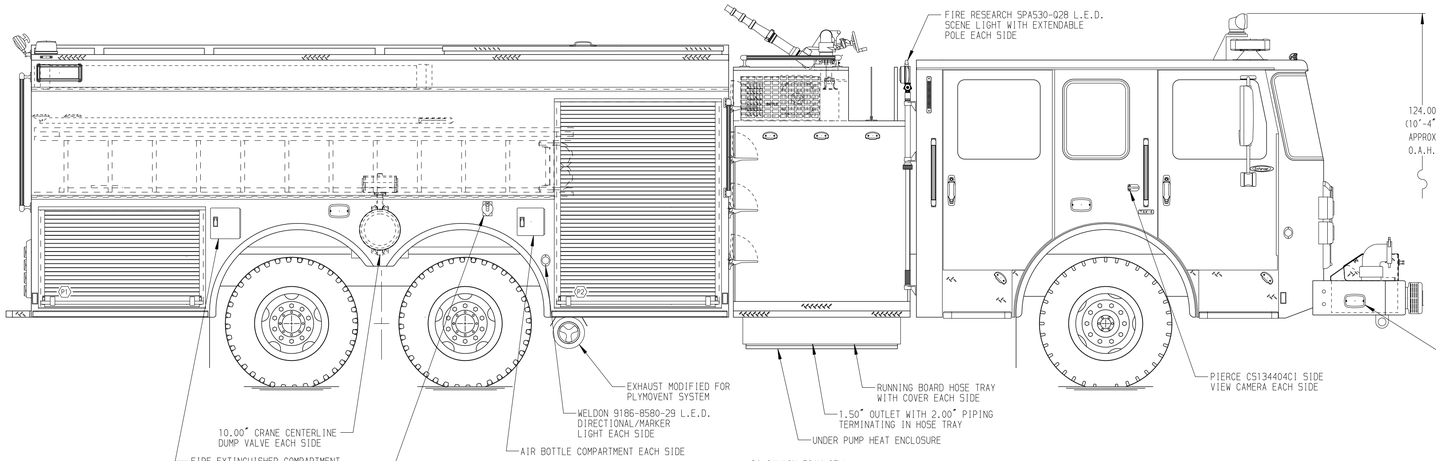

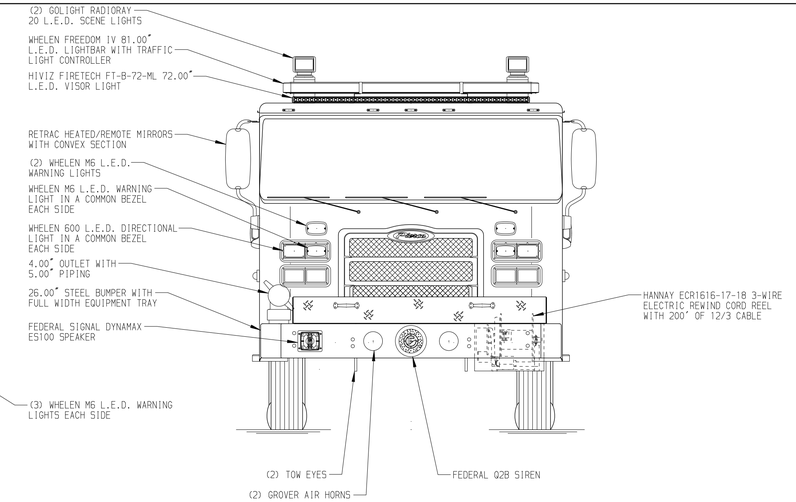

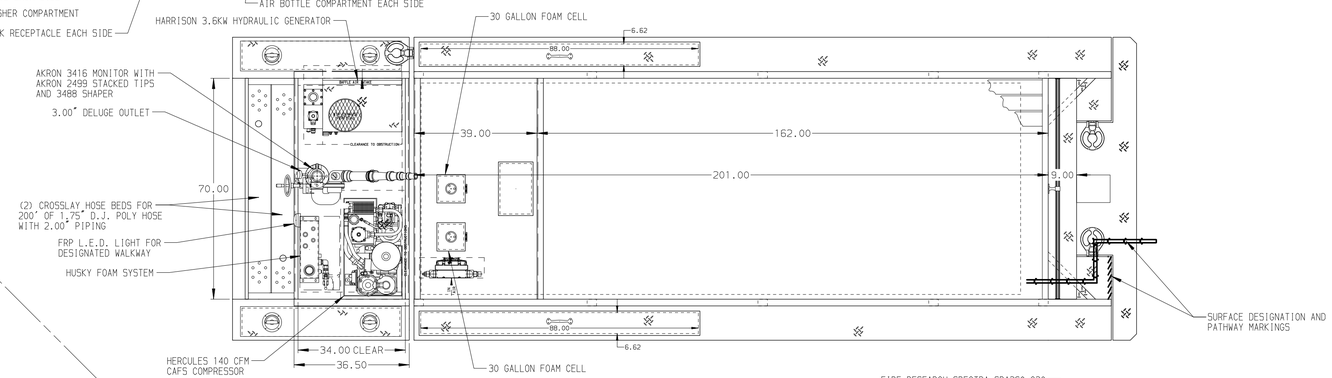

HOSEBED CAPACITIES

1. 200' OF 2.50" D.J. POLY HOSE
2. 200' OF 2.50" D.J. POLY HOSE
3. 1000' OF 5.00" D.J. POLY HOSE
4. 200' OF 1.75" D.J. POLY HOSE
5. 200' OF 1.75" D.J. POLY HOSE

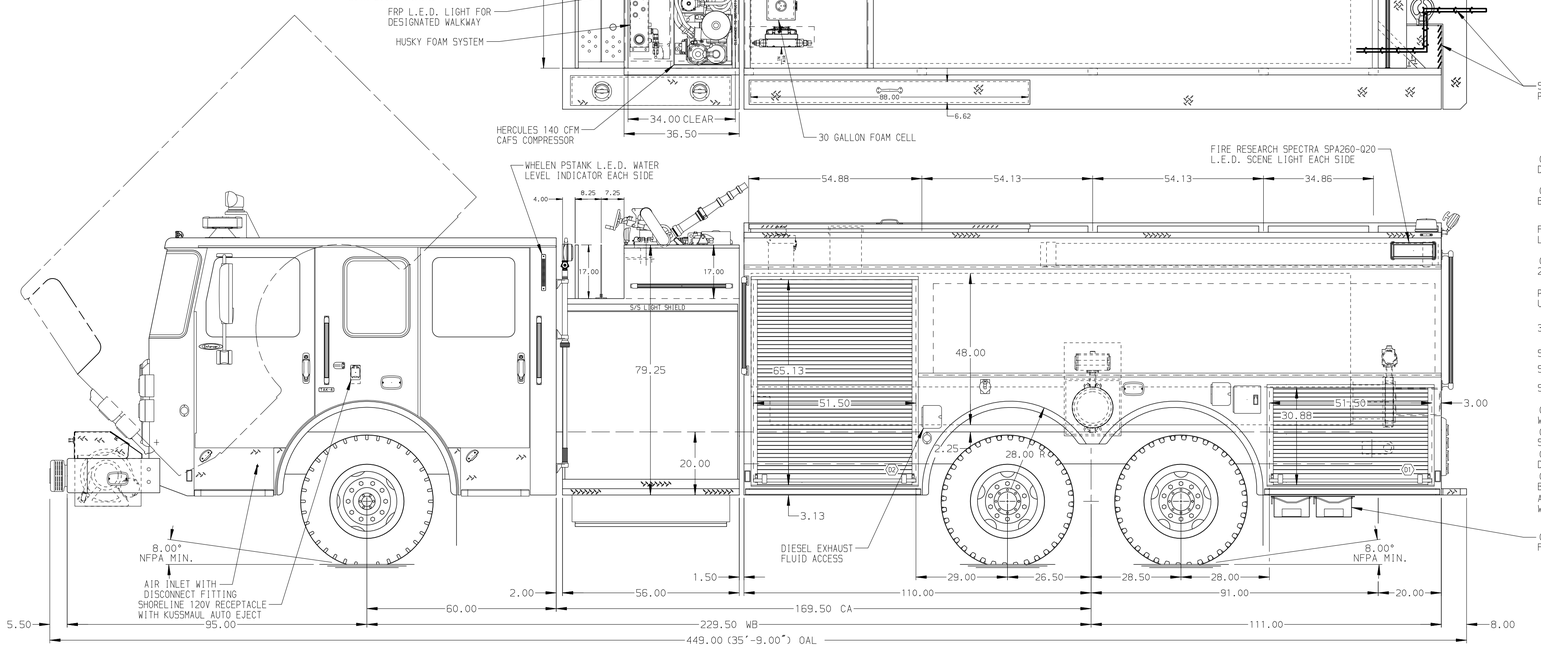

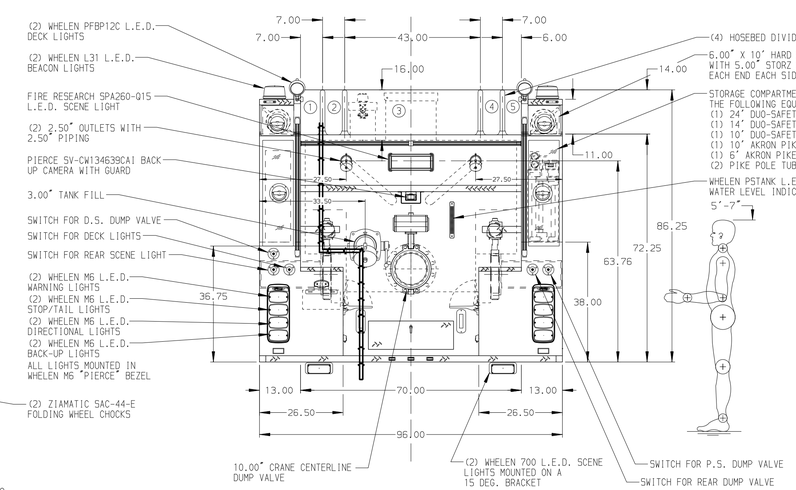

ALUMINUM BODY

NOTE

DIMENSIONS SHOWN ARE APPROXIMATE AND ARE SUBJECT TO MINOR DEVIATIONS AS MAY OCCUR OR BE NECESSARY IN CONSTRUCTION.
MINOR DETAILS NOT SHOWN.

1. BATTERY CHARGER LOCATED IN COMPARTMENT-D2
2. BATTERY CHARGER INDICATOR LOCATED ON DRIVER SIDE SEAT RISER
3. ONE FULL WIDTH/DEPTH ADJUSTABLE SHELF WITH 2" SIDES IN COMPARTMENT-TWO IN D2;P1,P2
4. ONE FLOOR MOUNTED SLIDE-OUT TRAY WITH 2" SIDES IN COMPARTMENT-D1,D2
5. ONE SWING-OUT TOOLBOARD WITH PEGBOARD PATTERN IN COMPARTMENT-P2
6. ALUMINUM TOOLBOARD MOUNTED TO SLIDE-OUT TRAY IN COMPARTMENT-D2
7. CIRCUIT BREAKER PANEL IN COMPARTMENT-D2
8. ONE SIX PLACE RECEPTACLE STRIP IN COMPARTMENT-D2

REV	DATE	BY	CH
3	03MAY17	BST	PPE
2	22MAR17	BST	PPE
1	12JAN17	BST	SMA

CHASSIS DATA
MAKE: PIERCE
MODEL: ENFORCER

Pierce MANUFACTURING INC.

TITLE: 1500-D-1970 GAL POLY W/(2)30 GAL FOAM CELLS, DELUGE 221" TANKER, HUSKY 30, CAFS, LADDERS THRU BODY
FOR: NIKISKI FIRE SERVICE AREA, NIKISKI, AK
DWG NO.: 30791AD

JOB NO.	30791
SCALE	1:24
DATE	
DRAWN BY	BST 21DEC16
CHECKED BY	SMA 03JAN17
SHEET SIZE	D
SHEET NO.	1 OF 1

View File Created 03-MAY-2017 07:47:26