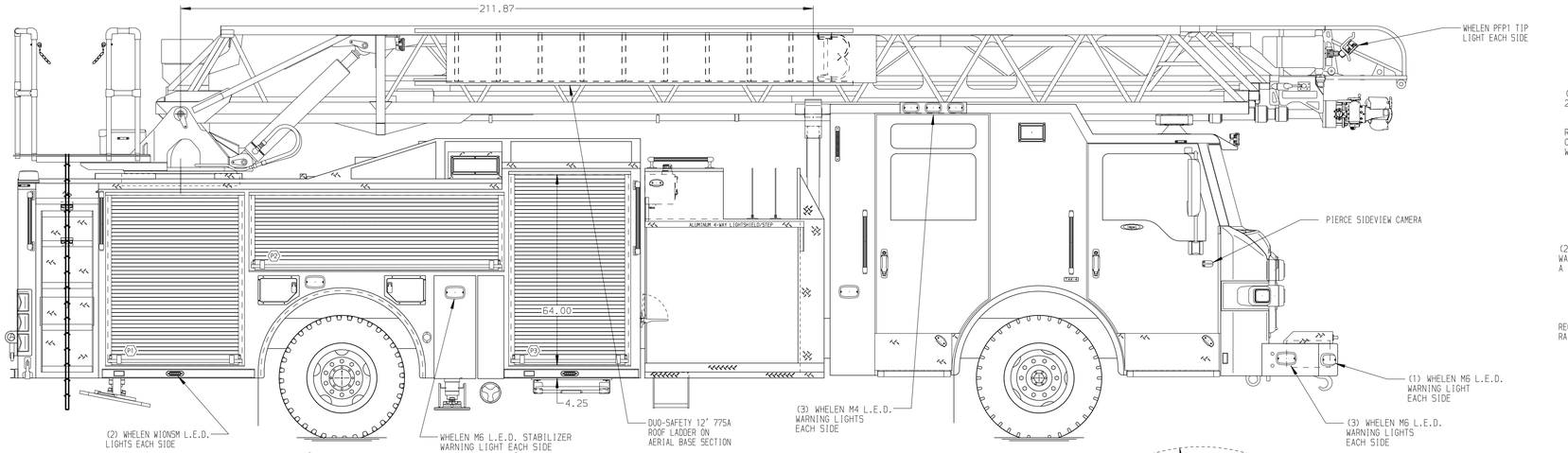

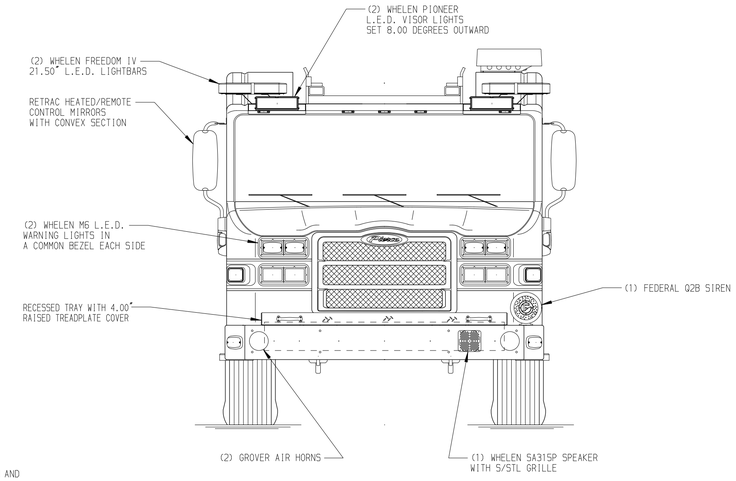

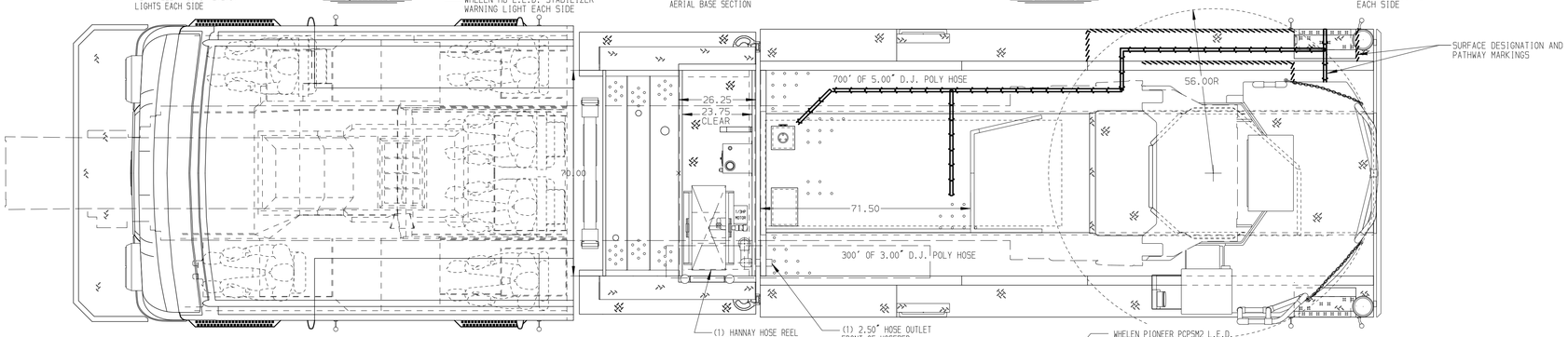

BODY	WATER TANK
107' Heavy Duty Alum Body	475 Gallon PAL Poly Water Tank
COMPT,DRIVER SIDE FRONT	Foam System
Full Height Rollup Forward	Husky 12 Single Agent Foam System
COMPT,DRIVER SIDE REAR	Foam Cell
Full Height Rollup Rearward	25 Gallon Foam Cell, Reduced Water
COMPT,PASSENGER SIDE FRONT	
Full Height Rollup Forward	
COMPT,PASSENGER SIDE REAR	
Full Height Rollup Rearward	

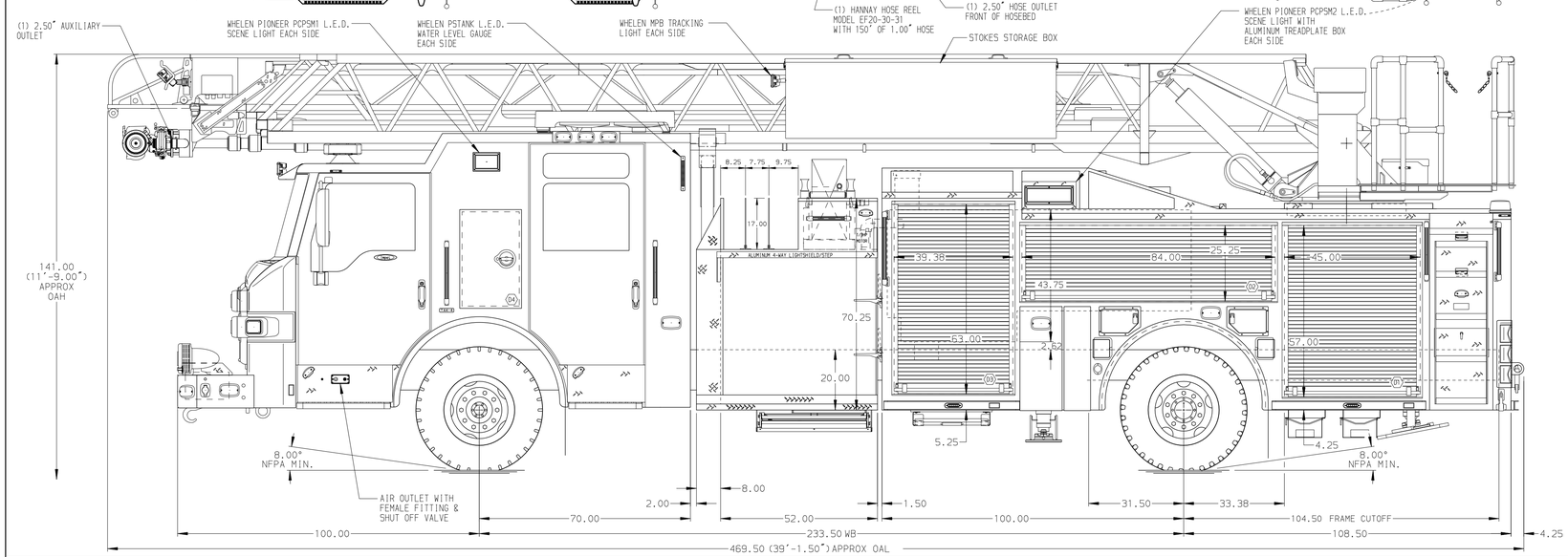

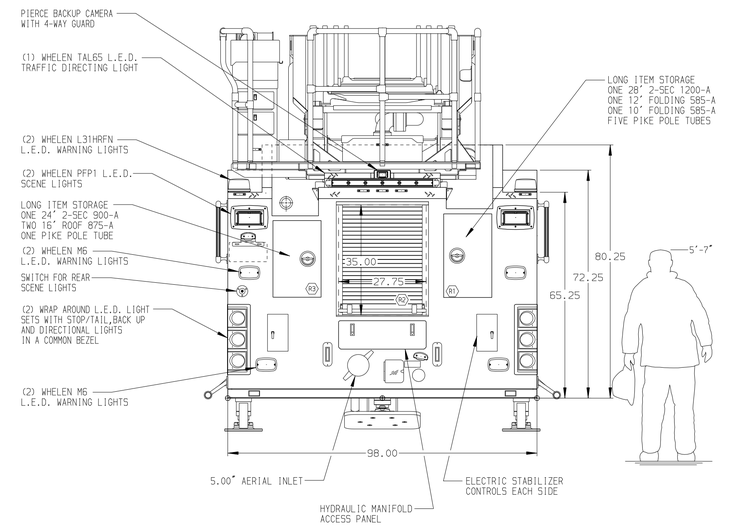

CHASSIS	CAB	AXLE,FRONT,CUSTOM	TRANSMISSION	PUMPHOUSE	CROSSLAYS,1.50"	SPEEDLAYS	SAFETY
Impel Chassis	7010 Impel Cab	24,000 Lb TAK-4 Axle	Allison 5th Gen, 3000 EVS P	52" Control Zone Side Mount	(2) 1.50" Standard Capacity	Speedlays Not Required	
ENGINE	BUMPER	AXLE,REAR		PUMP	CROSSLAYS,2.50"	GENERATOR	
450 HP Cummins L9 Engine	22" Painted steel Underslung	33,500 Lb Meritor Axle		2000 GPM Hale QMAX	(1) 2.50" Standard Capacity	Generator Not Required	

NOTE

DIMENSIONS SHOWN ARE APPROXIMATE AND ARE SUBJECT TO MINOR DEVIATIONS AS MAY OCCUR OR BE NECESSARY IN CONSTRUCTION.
MINOR DETAILS NOT SHOWN.

1. AIR INLET WITH DISCONNECT COUPLING IN THE DRIVER SIDE STEPWELL
2. SHORELINE RECEPTACLE WITH KUSSMAUL SUPER AUTO-EJECT WITH INDICATOR LIGHT ON DRIVER SIDE OF FRONT BUMPER
3. BATTERY CHARGER LOCATED IN COMPARTMENT D3
4. BATTERY CHARGE INDICATOR LOCATED NEAR THE DRIVERS SEAT WITH BRACKET
5. ADJUSTABLE SHELVES IN COMPARTMENTS PER SHOP ORDER
6. FLOOR MOUNTED SLIDE-OUT TRAYS LOCATED PER SHOP ORDER
7. ONE SWING-OUT ALUMINUM TOOL BOARD LOCATED PER SHOP ORDER
8. TWO WHELEN 700 L.E.D. HOSE BED LIGHTS LOCATED AT THE FRONT OF THE HOSE BED
9. L.E.D. LIGHTING ON AERIAL LADDER SECTIONS
10. NON-RAISED AERIAL PEDESTAL
11. 1500 GPM HIGH FLOW WATERWAY

REV	DATE	BY	CH
3	03MAY17	TKA	JGO
2	31MAR17	TKA	JGO

CHASSIS DATA
MAKE: PIERCE
MODEL: IMPEL

Pierce MANUFACTURING INC.

TITLE: 107' ASCENDANT AERIAL LADDER AND BODY ASSEMBLY
FOR: SOUTHERN MANATEE FIRE AND RESCUE, SARASOTA, FLORIDA
DWG NO.: 30795AD

JOB NO.	30795
SCALE	1:24
DATE	
DRAWN BY	TKA 09FEB17
CHECKED BY	GRM 09FEB17
SHEET SIZE	D
SHEET NO.	1 OF 1

View File Created 04-MAY-2017 07:02:49