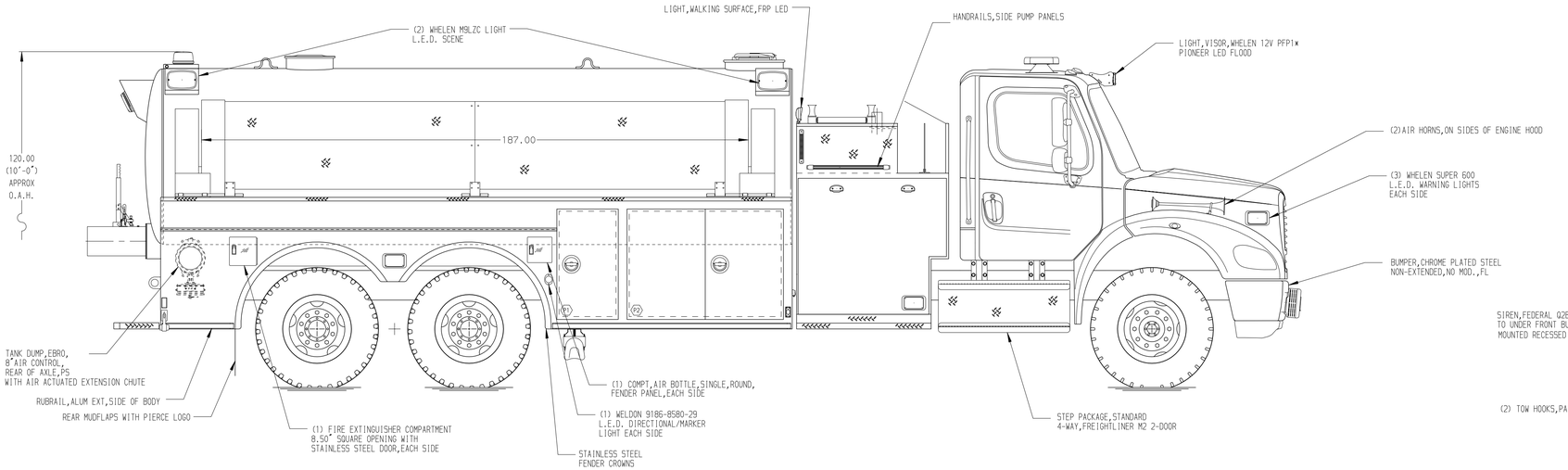

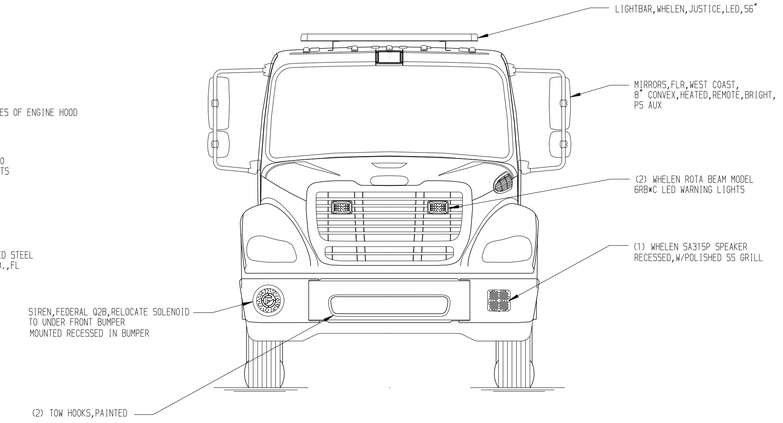

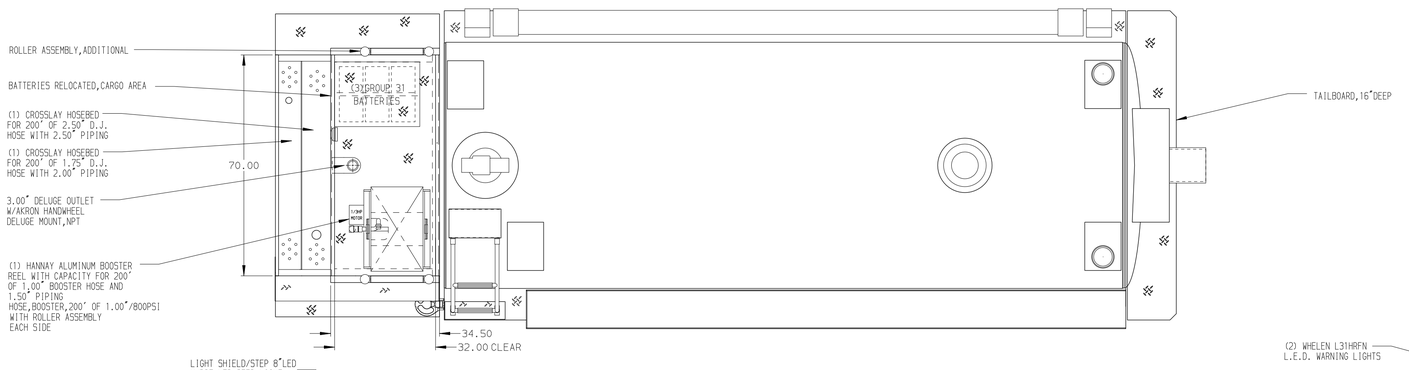

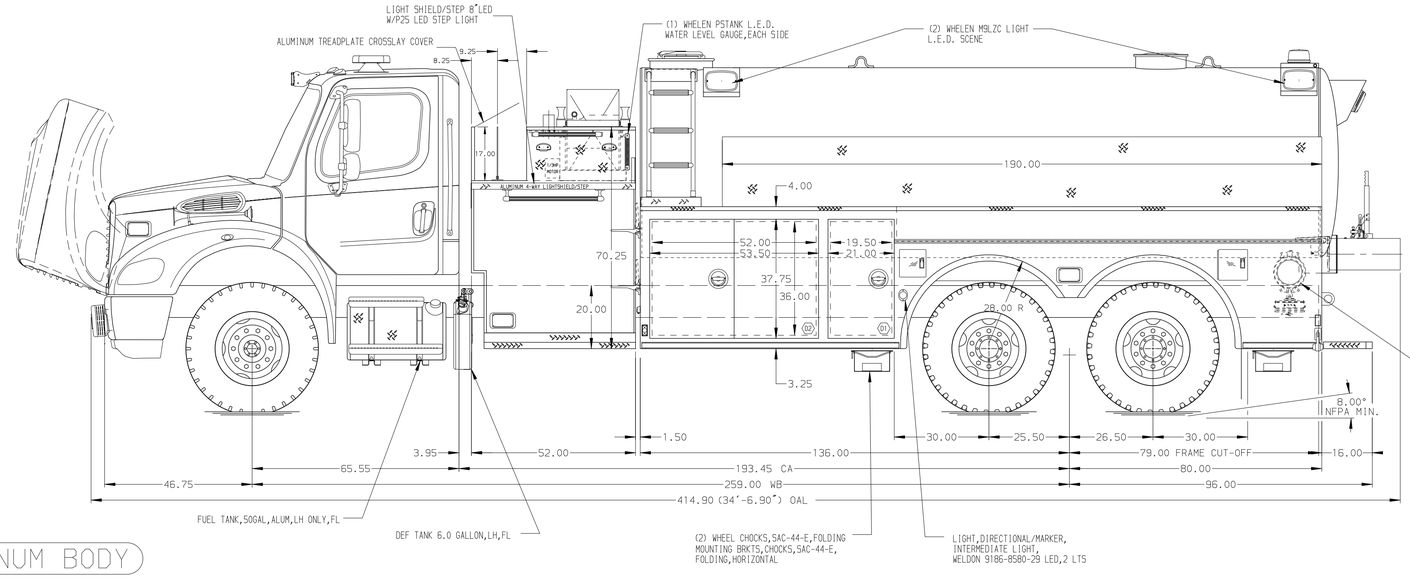

ALUMINUM BODY

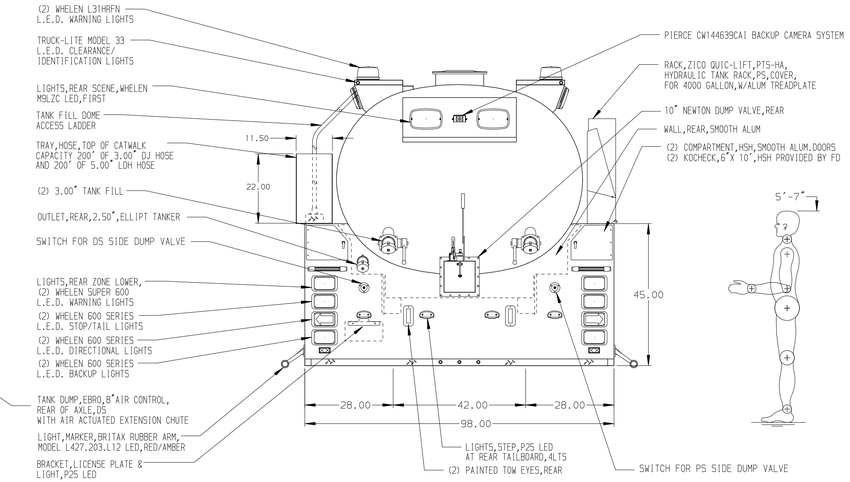

#4 FINISH S/STL

NOTE

DIMENSIONS SHOWN ARE APPROXIMATE
AND ARE SUBJECT TO MINOR DEVIATIONS
AS MAY OCCUR OR BE NECESSARY IN
CONSTRUCTION.
MINOR DETAILS NOT SHOWN.

REV.	DATE	BY	CHK'D
V	23JUN17	JAF	GSC
V	13MAY17	JLA	GSC
V	29MAR17	RWI	JAF

CHASSIS DATA
CHASSIS FL
MODEL M2-112

Pierce MANUFACTURING INC.
BRADENTON, FLORIDA

TITLE: 1250-D-3500 GALLONS WATER, 216" ELLIP, 60 X 78 HEAD SIZE,TANKER,52"SIDE CONTROL PH,(1)1.5"&(1)2.5 XLAYS

FOR: CLAY COUNTY FIRE RESCUE
GREEN COVE SPRINGS, FL

DRWG. NO. 30942AD

JOB NO.	30942
DATE	SCALE 1:24
04MAR17	DRAWN BY JLA
07MAR17	CHK'D BY RWI
SHEET NO. 1 OF 1	SHEET SIZE D

View File Created 29-JUN-2017 14:05:11