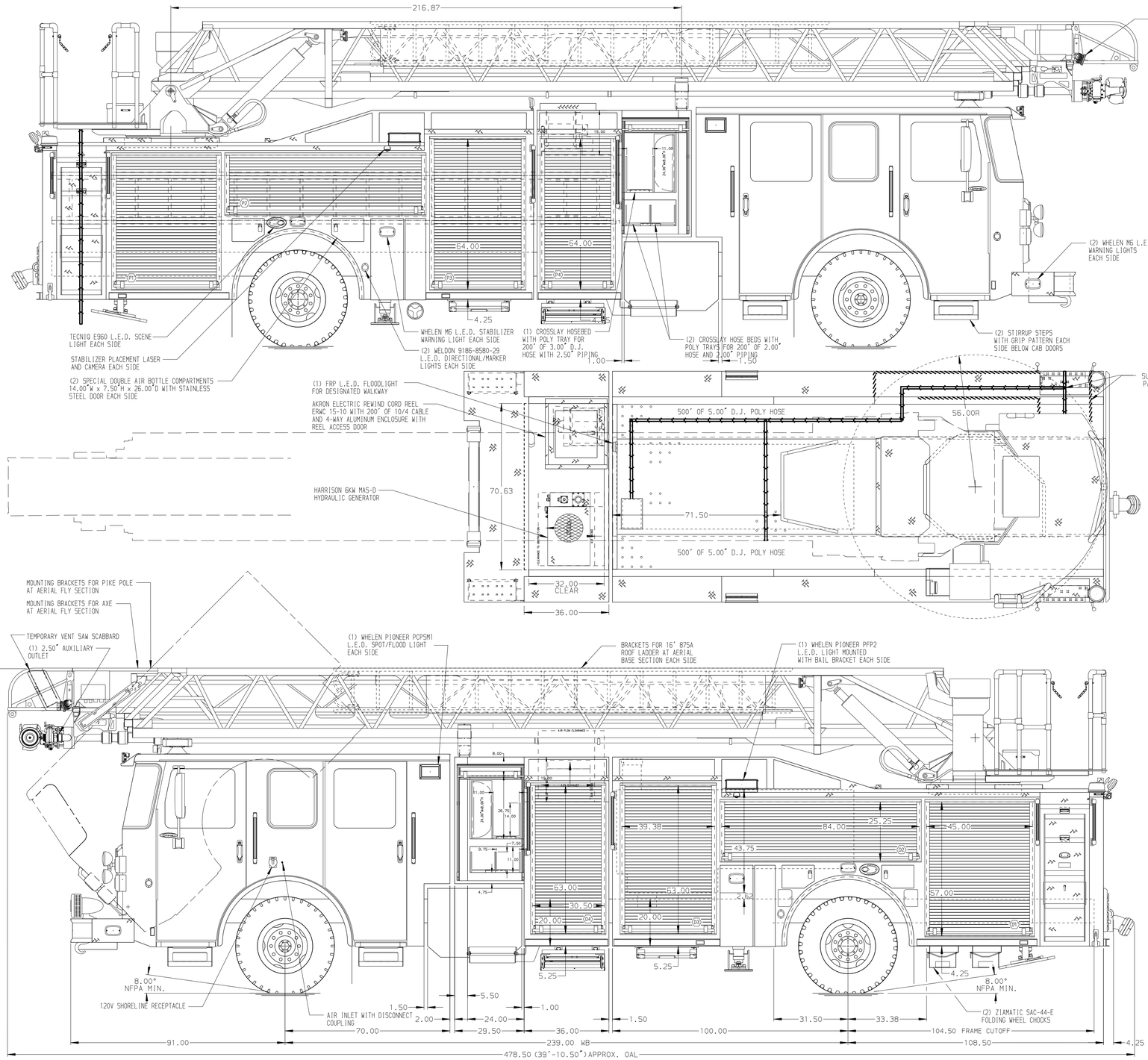

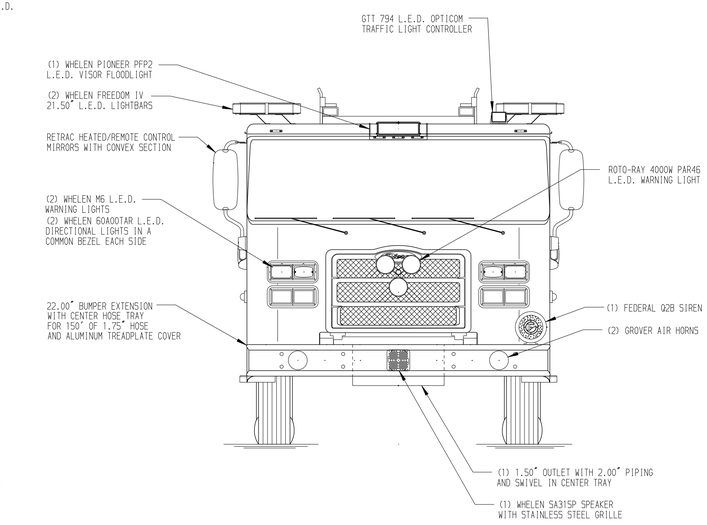

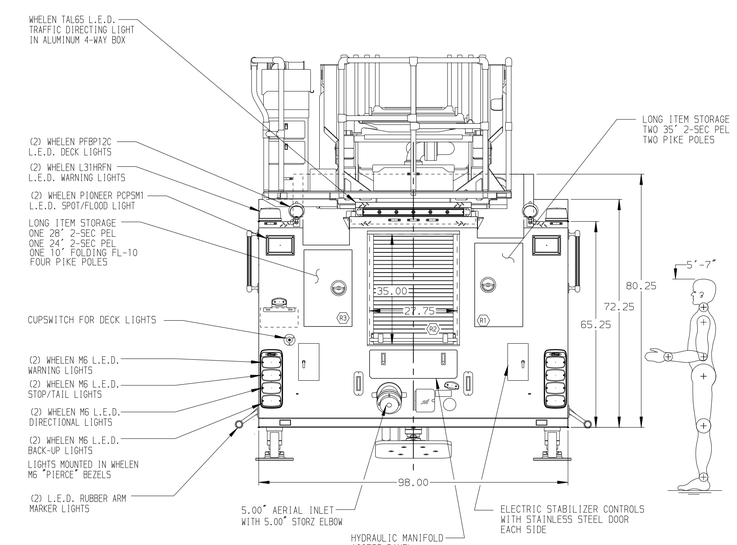

ALUMINUM BODY | MAXIMUM O.A.L. 480" | MAXIMUM O.A.H. 138"

NOTE

DIMENSIONS SHOWN ARE APPROXIMATE AND ARE SUBJECT TO MINOR DEVIATIONS AS MAY OCCUR OR BE NECESSARY IN CONSTRUCTION.
MINOR DETAILS NOT SHOWN.

1. BATTERY CHARGER LOCATED BEHIND DRIVER SEAT
2. BATTERY CHARGE INDICATOR LOCATED ON DRIVER'S SEAT RISER
3. FOUR DUPLEX RECEPTACLES LOCATED IN CAB
4. ONE FLOOR MOUNTED SLIDE-OUT TRAY IN COMPARTMENTS D1, D3, P1, P3
5. CIRCUIT BREAKER PANEL IN COMPARTMENT D3
6. TRIDENT FOLDING STEPS ON AERIAL DEVICE
7. L.E.D. LIGHTING ON AERIAL LADDER SECTIONS
8. 120V POWER TO AERIAL TIP
9. 2-WAY INTERCOM SYSTEM BETWEEN AERIAL TIP AND TURNTABLE
10. LIFTING EYE ROPE RESCUE ATTACHMENT AT AERIAL TIP
11. 1500 GPM HIGH FLOW WATERWAY
12. REMOTE MONITOR CONTROLS AT PUMP PANEL
13. AERIAL WATERWAY SHUTOFF VALVE
14. ONE 40" NHGF-40 D-HANDLE PIKE POLE SHIPPED LOOSE

REV	DATE	BY	CH
1	11SEP17	MWA	DTS
0	04AUG17	MWA	DTS

CHASSIS DATA
MAKE: PIERCE
MODEL: ENFORCER

Pierce MANUFACTURING INC.

TITLE: 107' ASCENDANT AERIAL LADDER AND BODY ASSEMBLY 500 GALLON WATER TANK
FOR: CHALFONT FIRE DEPARTMENT CHALFONT, PA
DWG NO.: 31052AD

JOB NO.	31052
SCALE	1:24
DATE	
DRAWN BY	MWA 13JUN17
CHECKED BY	GRM 14JUN17
SHEET SIZE	D
SHEET NO.	1 OF 1

View File Created 12-SEP-2017 09:27:35