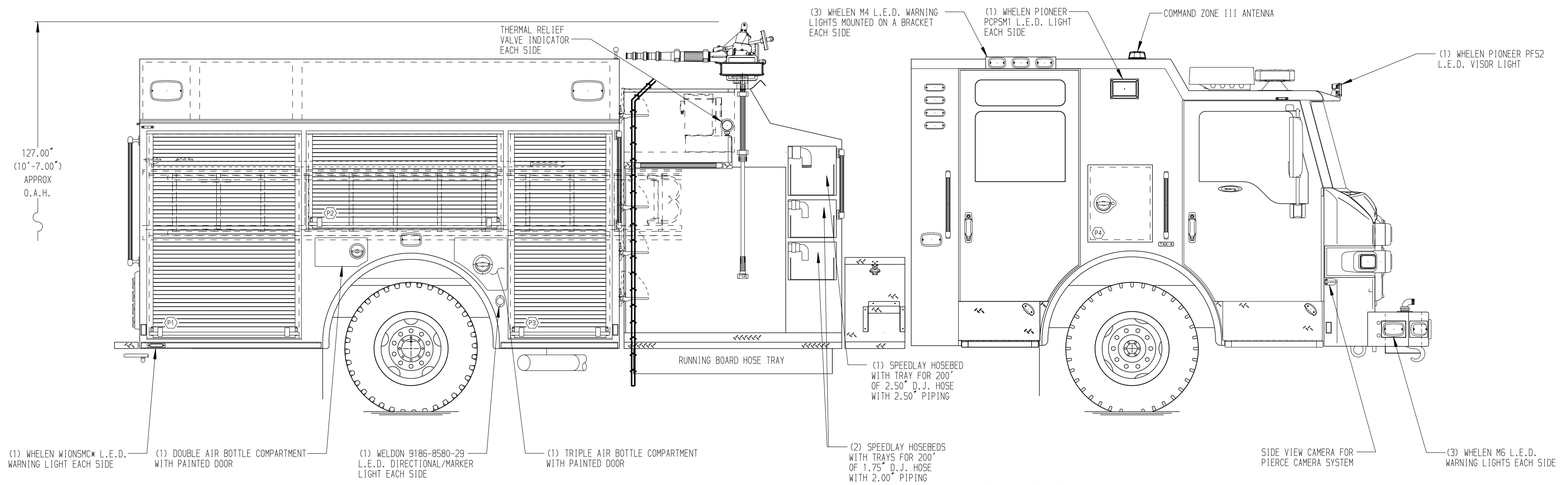

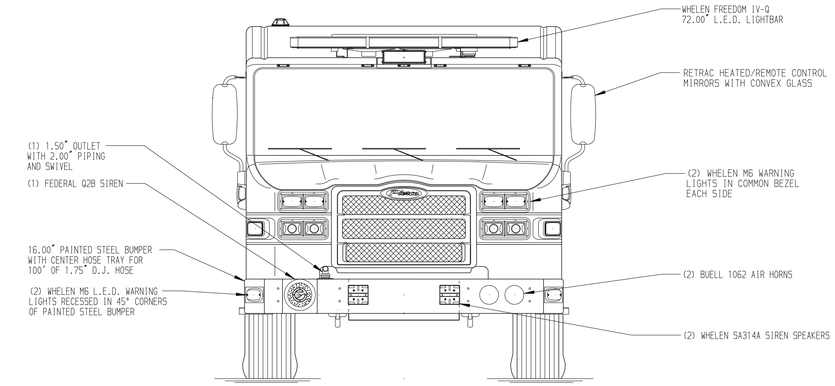

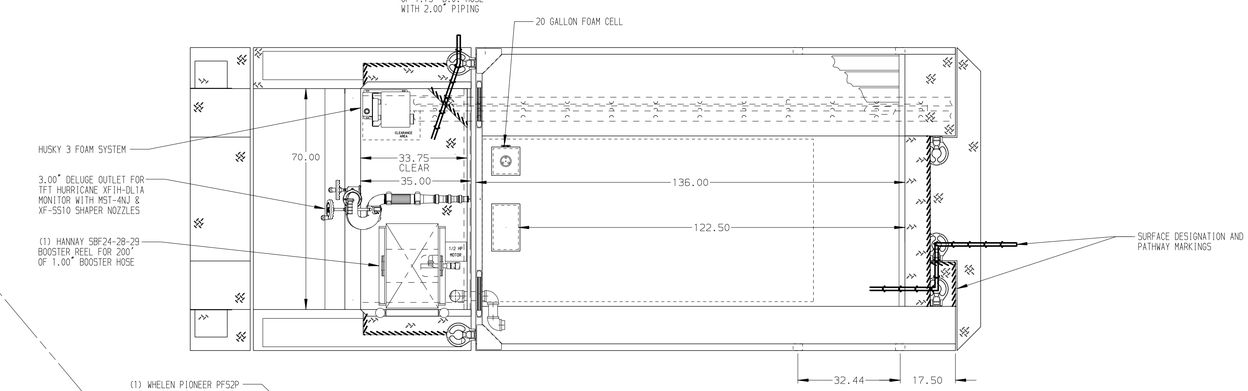

HOSEBED CAPACITIES

1. - 300' OF 2.50" D.J. HOSE
2. -1000' OF 5.00" D.J. HOSE
3. - 150' OF 3.00" D.J. HOSE
4. - 150' OF 3.00" D.J. HOSE

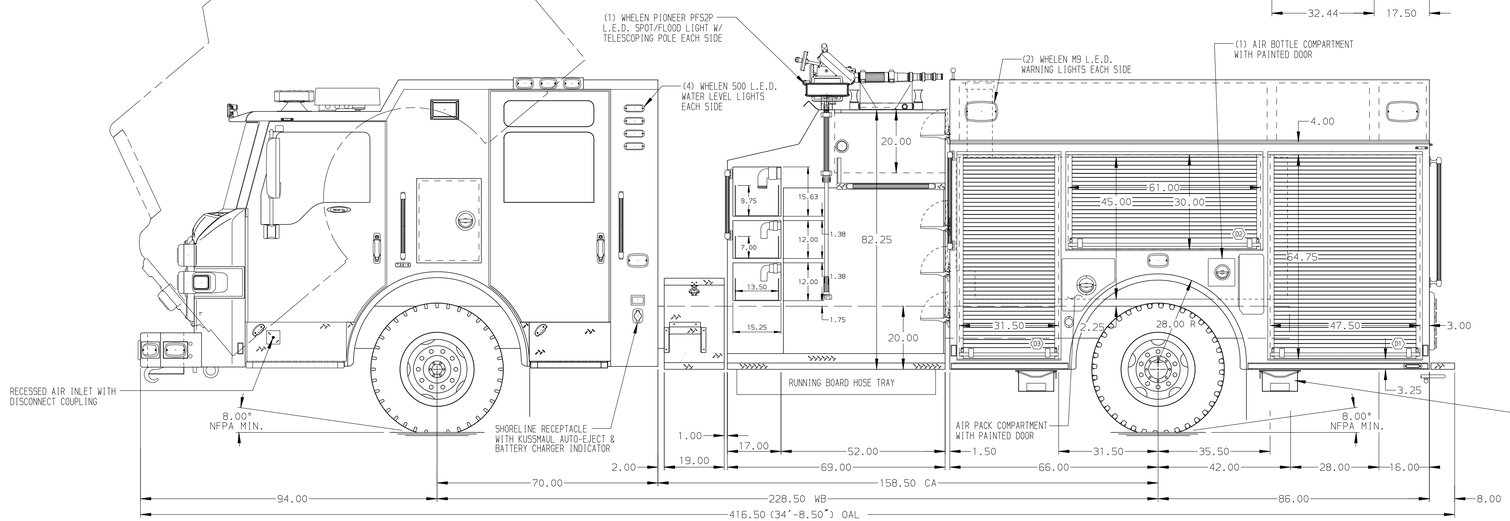

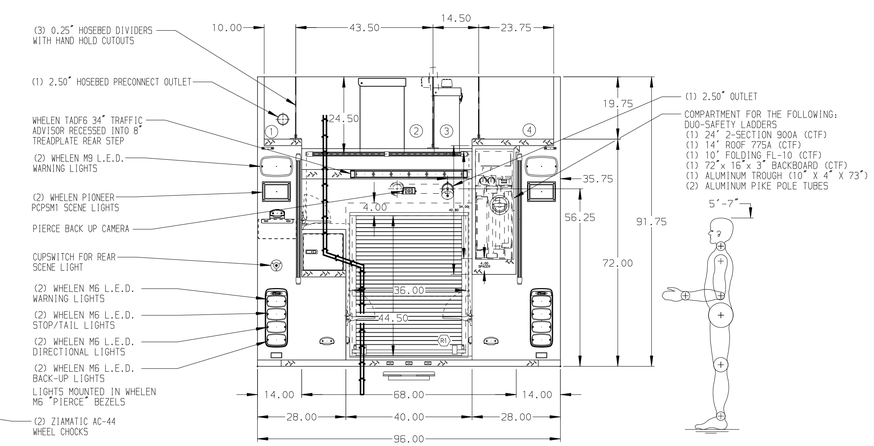

ALUMINUM BODY

SIDE ROLL AND FRONTAL IMPACT PROTECTION

NOTE

DIMENSIONS SHOWN ARE APPROXIMATE AND ARE SUBJECT TO MINOR DEVIATIONS AS MAY OCCUR OR BE NECESSARY IN CONSTRUCTION.
MINOR DETAILS NOT SHOWN.

1. BATTERY CHARGER LOCATED IN COMPARTMENT D3
2. ONE FULL WIDTH ADJUSTABLE TRAY IN COMPARTMENTS D1 AND R1
3. ONE FULL WIDTH TILT/SLIDE-OUT TRAY LOCATED IN COMPARTMENT D1
4. ONE FLOOR MOUNTED SLIDE-OUT TRAY IN COMPARTMENTS D3, P1, P3, AND R1
5. SWING-OUT TOOL BOARD WITH PEGBOARD PATTERN IN COMPARTMENT P2
6. HERCULES 200 CFM COMPRESSED AIR FOAM SYSTEM
7. TWO 20A / 120V RECEPTACLE IN DS EMS COMPARTMENT
8. TWO 20A / 120V RECEPTACLE IN COMPARTMENT D3
9. ONE CTECH DRAWER ASSEMBLY IN COMPARTMENT D3

REV	DATE	BY	CH
7	28JUN17	JWO	JJR
6	31MAY17	GVH	JJR

CHASSIS DATA
MAKE: PIERCE
MODEL: VELOCITY

Pierce MANUFACTURING INC.

TITLE: 2000-D-750G WATER, 20G FOAM, 152" RESCUE / FDLER (2) SPEEDLAYS, DELUGE, CAFS 200, HUSKY 3, A/C
FOR: BEXAR BULVERDE VOLUNTEER FIRE DEPARTMENT SAN ANTONIO, TEXAS
DWG NO.: 31118AD

JOB NO.	SCALE	DRAWN BY	CHECKED BY	SHEET SIZE	SHEET NO.
31118 (01-02)	1:24	GVH	CDU	D	1 OF 1

DATE: 24MAR17

View File Created 10-JUL-2017 09:42:48