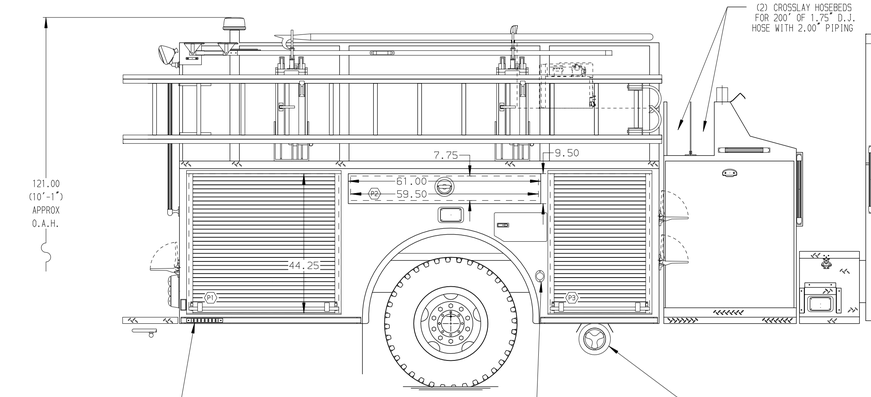

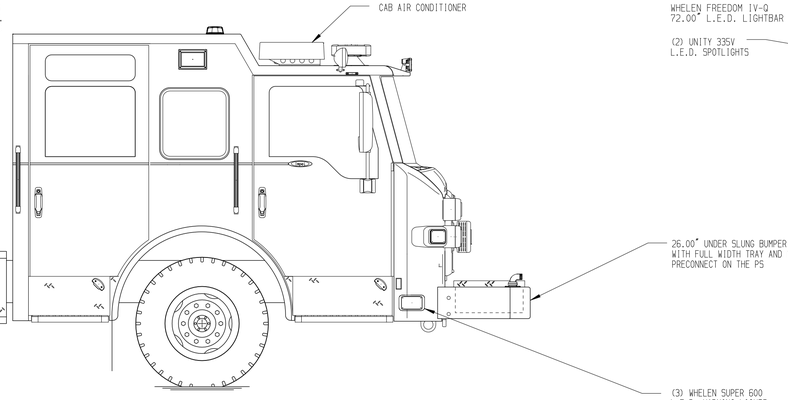

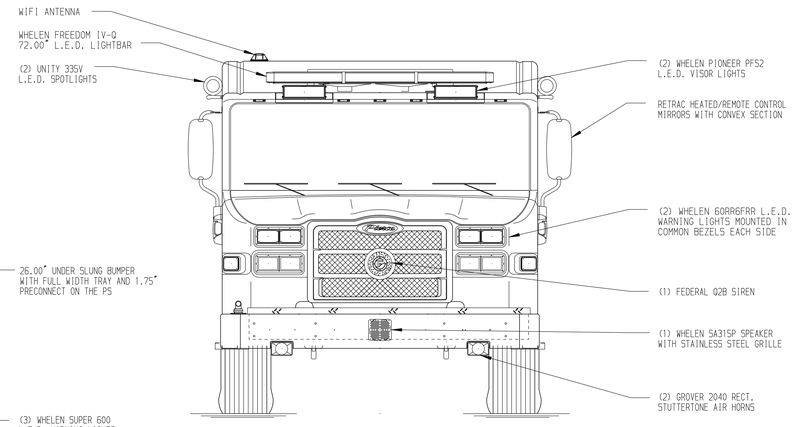

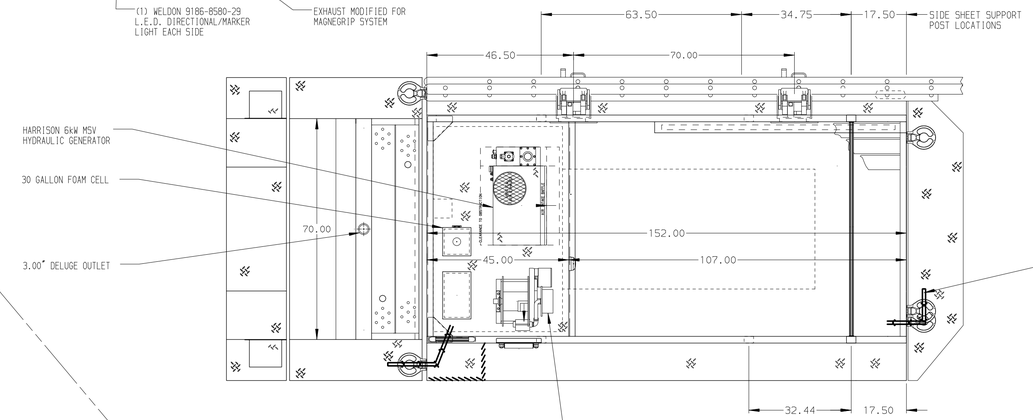

HOSEBED CAPACITIES

1. 100' OF 1.75" D.J. POLY HOSE
2. 300' OF 3.00" D.J. POLY HOSE
3. 1000' OF 5.00" D.J. POLY HOSE
4. 400' OF 2.50" D.J. POLY HOSE

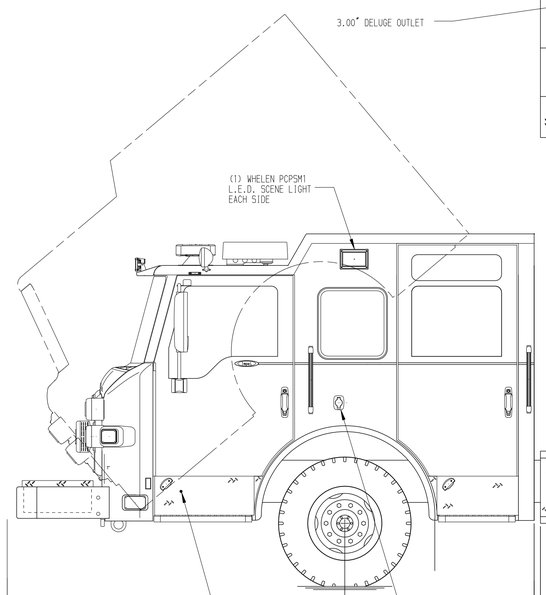

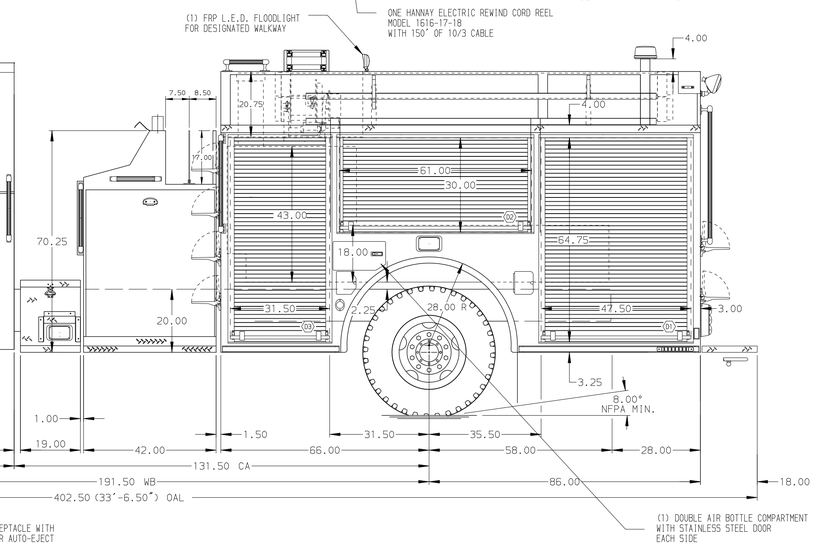

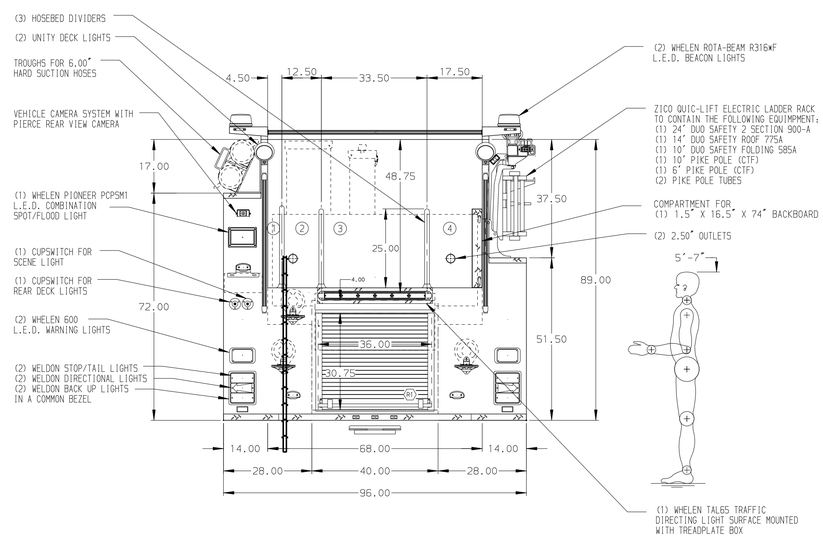

ALUMINUM BODY

NOTE

DIMENSIONS SHOWN ARE APPROXIMATE AND ARE SUBJECT TO MINOR DEVIATIONS AS MAY OCCUR OR BE NECESSARY IN CONSTRUCTION.
MINOR DETAILS NOT SHOWN.

1. BATTERY CHARGER LOCATED IN COMPARTMENT D3
2. BATTERY CHARGER INDICATOR BEHIND DRIVER'S SEAT DISPLAYED THROUGH WINDOW
3. ONE FLOOR MOUNTED SLIDE-OUT TRAY IN COMPARTMENT D3 & R1
4. THREE SLIDE-OUT TOOL BOARDS WITH PEGBOARD PATTERN IN COMPARTMENT D1
5. PARTITION BETWEEN COMPARTMENTS D1/R1 AND P1/R1
6. MOUNTING RACK WITH STRAPS FOR (3) FIRE EXTINGUISHERS LOCATED IN D1
7. ONE ADJUSTABLE FULL WIDTH/DEPTH SHELF IN COMPARTMENT D2, P1 & P3 TWO IN COMPARTMENT D3
8. AIR OUTLET WITH SHUT OFF VALVE LOCATED ON BOTH PUMP PANELS
9. CIRCUIT BREAKER PANEL IN COMPARTMENT D3

REV	DATE	BY	CH
E	30AUG17	MMF	JJR
D	23JUN17	MMF	SHE
C	19JUN17	MMF	SHE
B	25MAY17	MMF	SHE
A	07APR17	MMF	JBL

CHASSIS DATA
MAKE: PIERCE
MODEL: IMPEL

Pierce MANUFACTURING INC.

TITLE: 1500-D-500P W/30G FOAM,152",FULL HEIGHT D.S.
3/4 HEIGHT P.S.,FDLER,(2) X-LAYS,DELUGE

FOR: ST. PETERSBURG
ST. PETERSBURG, FLORIDA

DWG NO.: 31148AD

JOB NO.	31148
SCALE 1:24	DATE
DRAWN BY MMF	29MAR17
CHECKED BY KBO	03APR17
SHEET SIZE D	SHEET NO. 1 OF 1

View File Created 01-SEP-2017 06:00:18