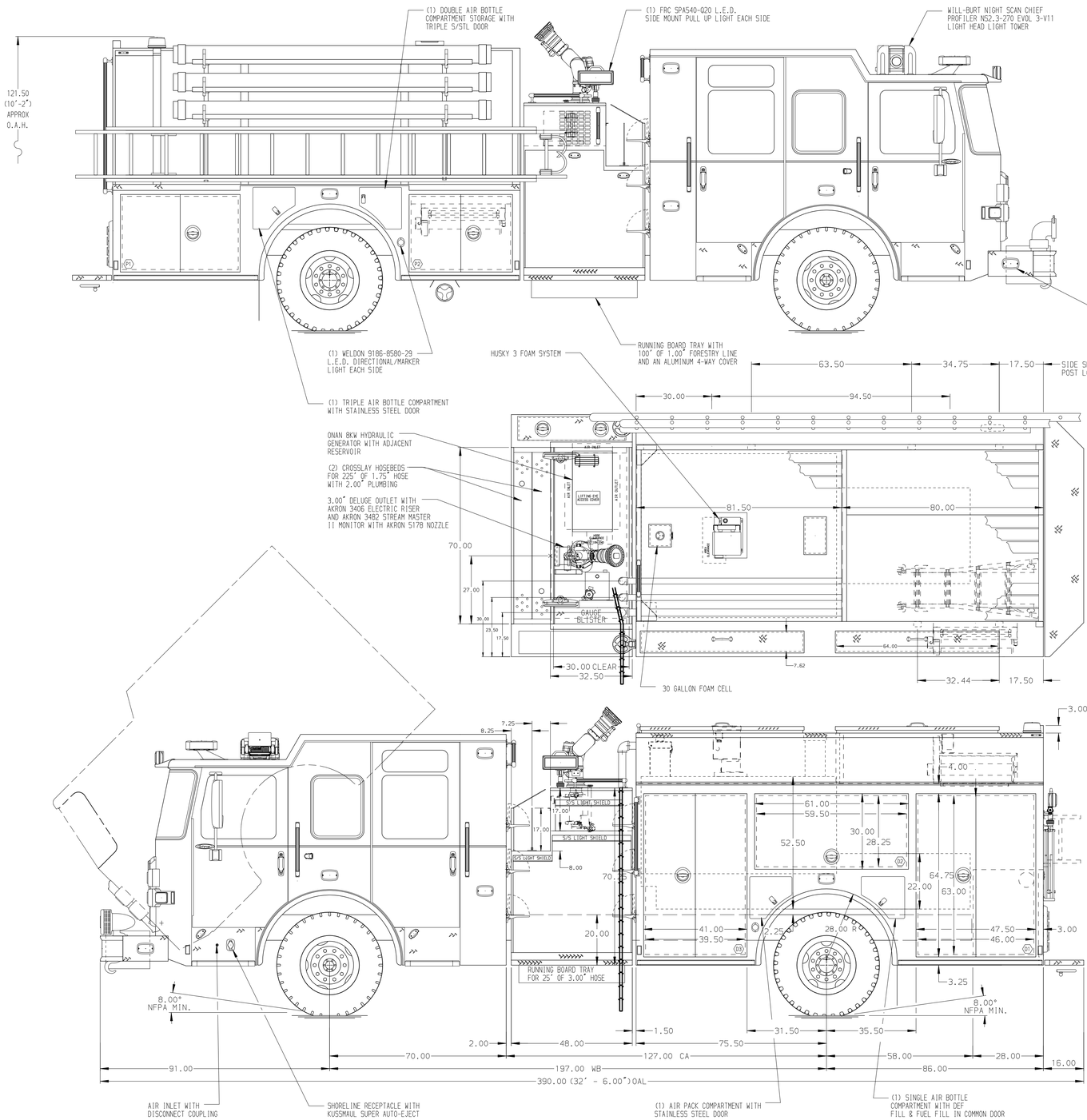

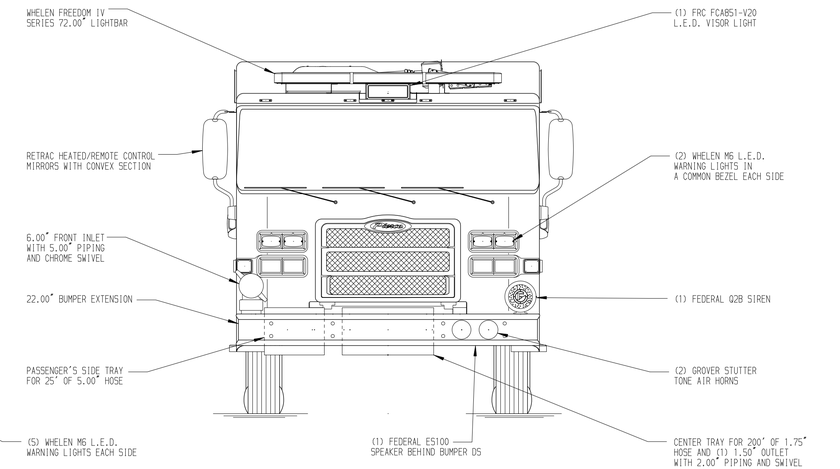

HOSEBED CAPACITIES

1. - 225' OF 2.50" HOSE
2. - 225' OF 1.75" HOSE
3. - 225' OF 1.75" HOSE
4. - 225' OF 2.50" HOSE
5. - 1000' OF 5.00" HOSE

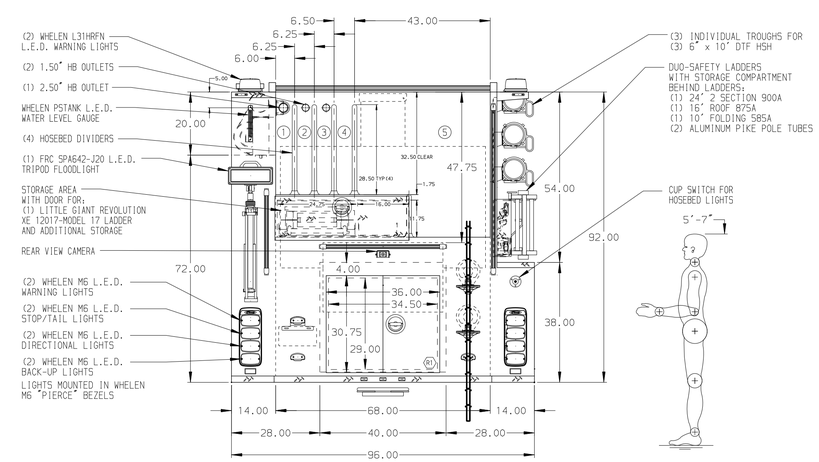

ALUMINUM BODY

SIDE ROLL & FRONTAL IMPACT PROTECTION

NOTE

DIMENSIONS SHOWN ARE APPROXIMATE AND ARE SUBJECT TO MINOR DEVIATIONS AS MAY OCCUR OR BE NECESSARY IN CONSTRUCTION.
MINOR DETAILS NOT SHOWN.

1. WHEEL CHOCKS AND MOUNTING BRACKETS PROVIDED BY FIRE DEPARTMENT
2. BATTERY CHARGER/COMPRESSOR LOCATED IN DRIVER SIDE HATCH COMPARTMENT
3. BATTERY CHARGE INDICATOR LOCATED ON DRIVER'S SEAT RISER
4. DUAL L.E.D. LIGHT STRIPS LOCATED IN HOSE BED
5. ONE ADJUSTABLE FULL WIDTH/DEPTH SHELF IN COMPARTMENT D1 & D3
6. ONE FLOOR MOUNTED SLIDE-OUT TRAY IN COMPARTMENT D3 & R1
7. SWING-OUT TOOL BOARD WITH PEGBOARD PATTERN IN COMPARTMENT D2
8. CIRCUIT BREAKER PANEL IN COMPARTMENT D3
9. ONE AKRON ERWC-10-28 CABLE REEL MOUNTED IN HATCH COMPARTMENT ABOVE D1 AND IN COMPARTMENT P2 WITH CAPACITY FOR 200' OF 10/3 CABLE

REV	DATE	BY	CH
V	11JUL17	AMI	TWH
V	06JUN17	AMI	TWH
V	18APR17	AMI	WKL

CHASSIS DATA — MAKE: PIERCE — MODEL: ENFORCER

Pierce MANUFACTURING INC.

TITLE: 2000-1000P 30G FOAM CELL, 161" FH DS, LOW SIDE PS (2)XLAYS,DELUGE, GENERATOR, LADDERS ON PS SIDE SHEET

FOR: REHOBOTH BEACH, REHOBOTH BEACH, DELAWARE

DWG NO.: 31163AD

JOB NO.	31163
SCALE	1:24
DATE	
DRAWN BY	AMI
DATE	11APR17
CHECKED BY	CCA
DATE	11APR17
SHEET SIZE	D
SHEET NO.	1 OF 1

View File Created 12-JUL-2017 13:36:47