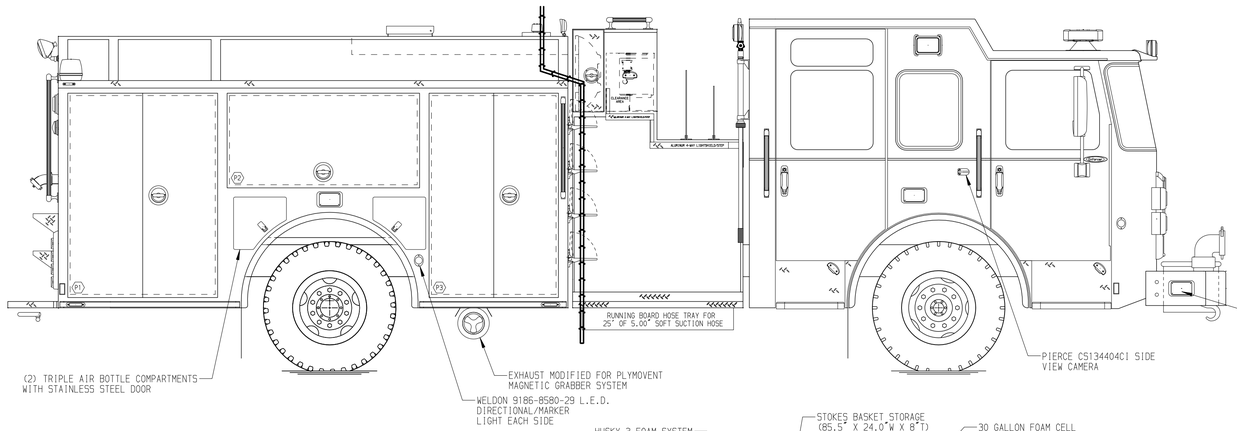

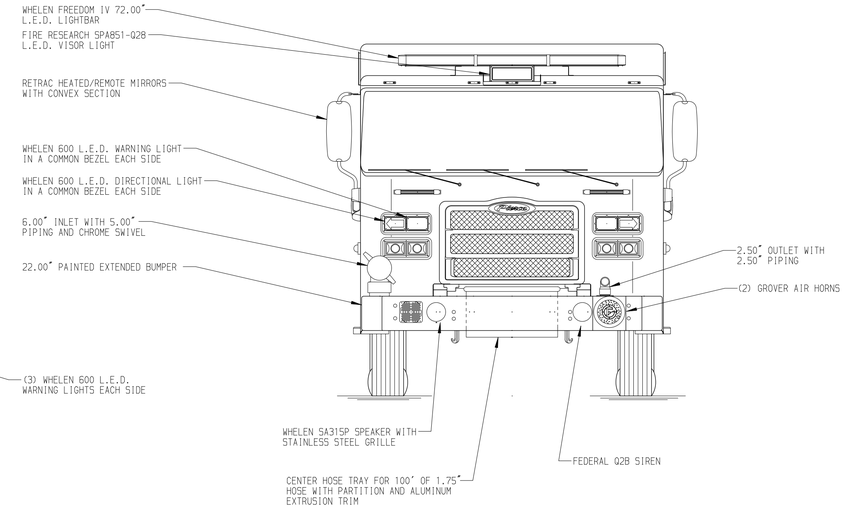

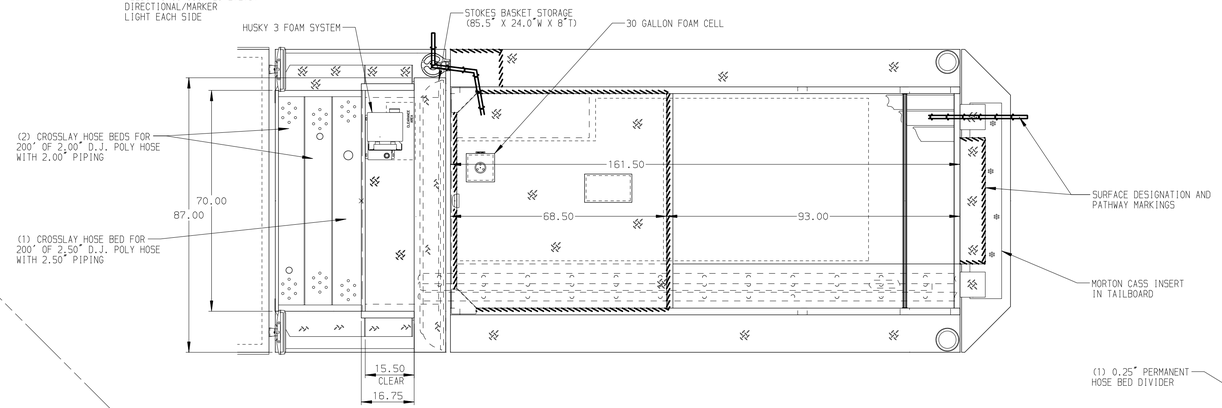

HOSEBED CAPACITIES

1. 300' OF 1.75" D.J. POLY HOSE
2. 300' OF 2.50" D.J. POLY HOSE
3. 500' OF 3.00" D.J. POLY HOSE
4. 1000' OF 5.00" D.J. POLY HOSE

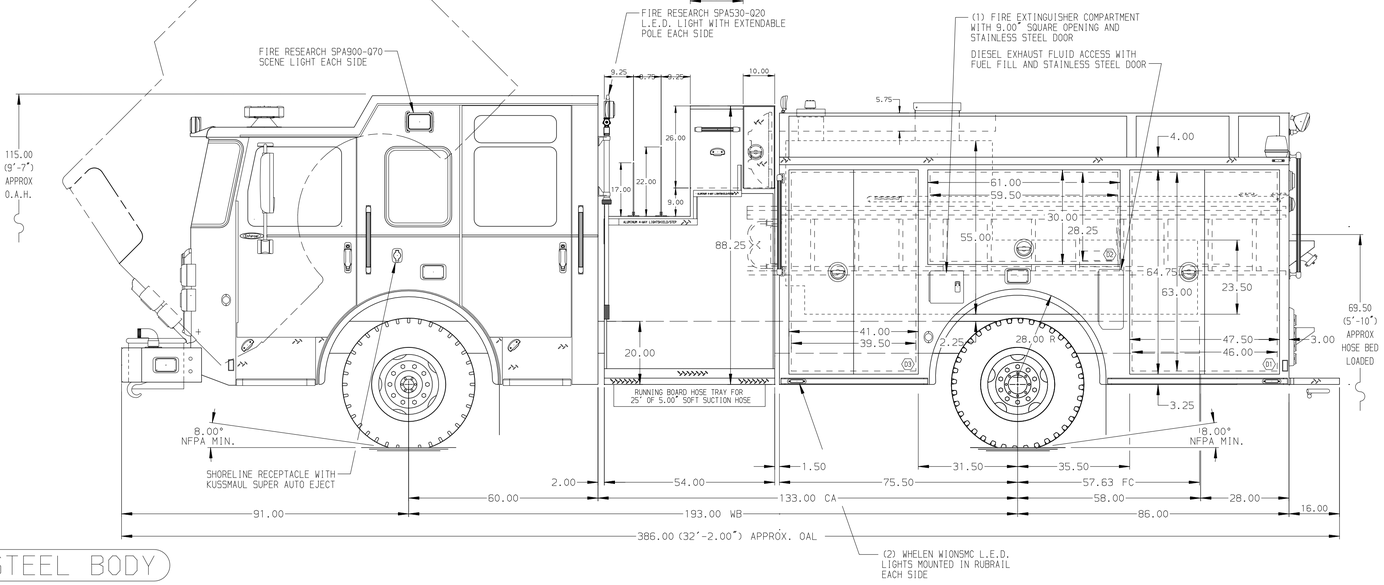

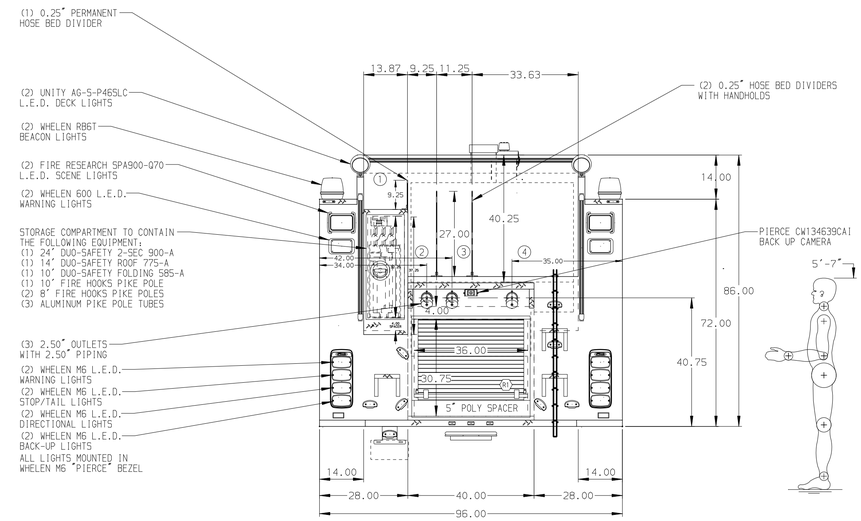

STAINLESS STEEL BODY

NOTE

DIMENSIONS SHOWN ARE APPROXIMATE AND ARE SUBJECT TO MINOR DEVIATIONS AS MAY OCCUR OR BE NECESSARY IN CONSTRUCTION.
MINOR DETAILS NOT SHOWN.

1. AIR INLET/OUTLET WITH DISCONNECT FITTING LOCATED ON DRIVER SIDE SEAT RISER
2. AIR OUTLET WITH SHUT OFF VALVE LOCATED ON DRIVER SIDE PUMP PANEL
3. BATTERY CHARGER LOCATED IN COMPARTMENT D3
4. BATTERY CHARGER INDICATOR LOCATED ON DRIVER SIDE SEAT RISER
5. ADJUSTABLE FULL WIDTH/DEPTH SHELVES IN COMPARTMENT D1, D3, P1 & P3
6. SWING-OUT TOOL GRID SYSTEM IN COMPARTMENT D2
7. WATER HEATER IN COMPARTMENT P3

REV	DATE	BY	CH
7	24JUL17	GVH	MSA
6	15JUN17	GVH	MSA
5	19MAY17	GVH	KWI
4	10MAY17	GVH	WKL

CHASSIS DATA
MAKE: PIERCE
MODEL: ENFORCER

TITLE: 1500-D-720P W/30 GAL. FOAM CELL,(3) CROSSLAYS 161" PUMPER BODY,LADDERS BETWEEN TANK AND BODY
FOR: BRIGHTON FIRE DISTRICT ROCHESTER, NY
DWG NO.: 31175AD

Pierce MANUFACTURING INC.

JOB NO.	31175
SCALE	1:24
DATE	
DRAWN BY	GVH
	24APR17
CHECKED BY	CCA
	05MAY17
SHEET SIZE	D
SHEET NO.	1 OF 1

View File Created 01-AUG-2017 06:45:11