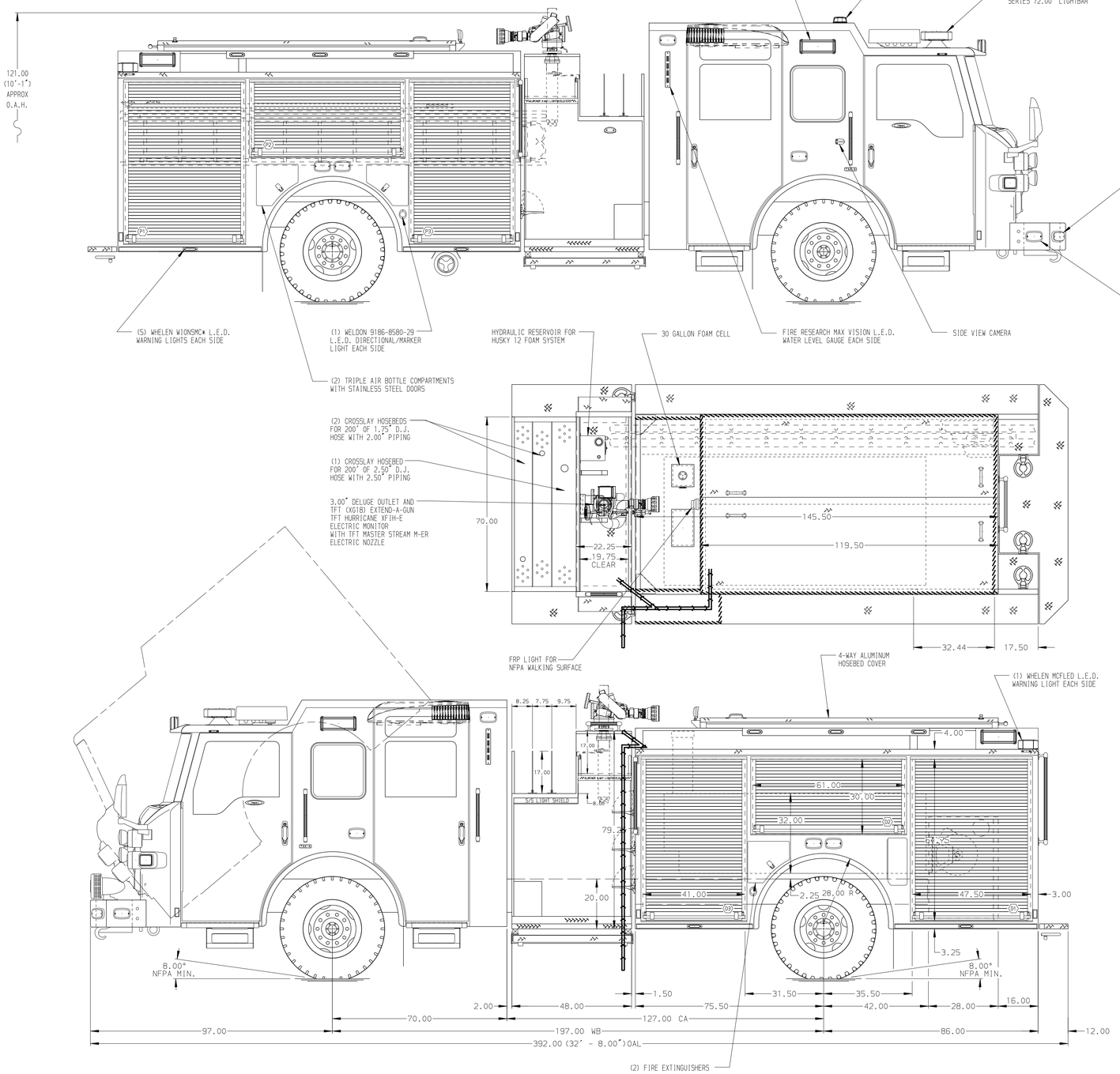

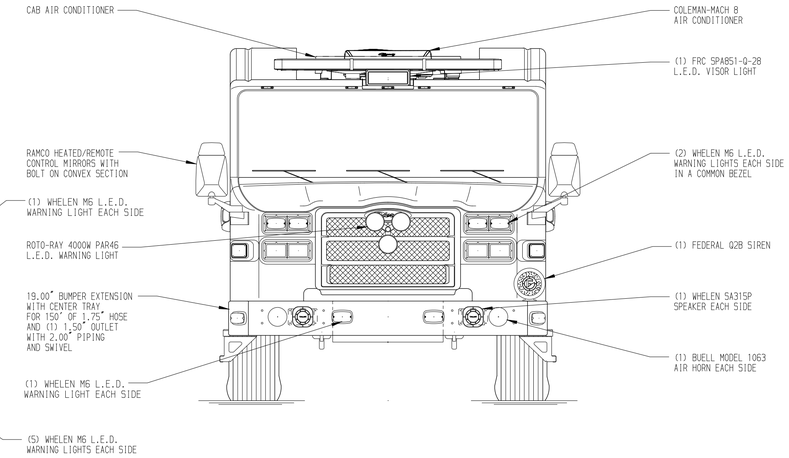

HOSEBED CAPACITIES

1. 600' OF 3.00" D.J. POLY HOSE
2. 1000' OF 5.00" D.J. POLY HOSE
3. MISC STORAGE AREA

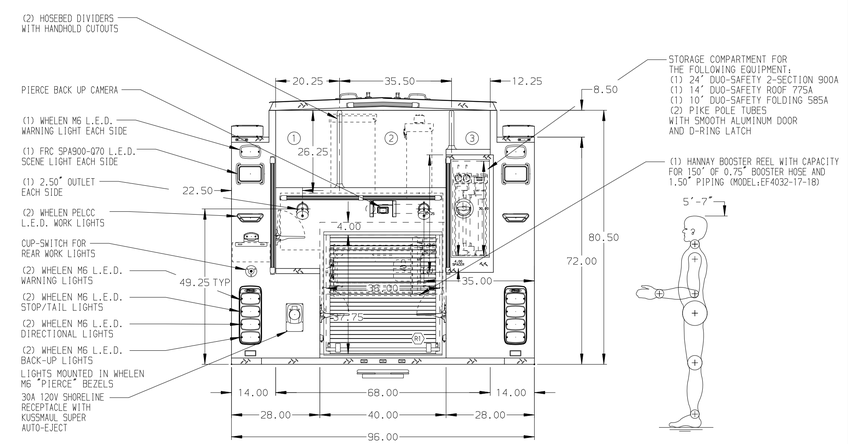

GALVINIZED BODY

SIDE ROLL AND FRONTAL IMPACT PROTECTION

NOTE

DIMENSIONS SHOWN ARE APPROXIMATE AND ARE SUBJECT TO MINOR DEVIATIONS AS MAY OCCUR OR BE NECESSARY IN CONSTRUCTION.
MINOR DETAILS NOT SHOWN.

1. WHEEL CHOCKS AND MOUNTING BRACKETS PROVIDED BY FIRE DEPARTMENT
2. AIR INLET WITH DISCONNECT COUPLING LOCATED ON D5 STEP WELL
3. BATTERY CHARGER LOCATED BEHIND DRIVER'S SEAT
4. BATTERY CHARGER INDICATOR LOCATED ON D5 STEP WELL
5. ONE ADJUSTABLE FULL WIDTH/DEPTH SHELF IN COMPARTMENT D1, D2, D3, P3, TWO IN P1
6. ONE FLOOR MOUNTED SLIDE-OUT TRAY IN COMPARTMENT D1, D3 & P1
7. ONE SWING-OUT ALUMINUM TOOL BOARD IN COMPARTMENT P2
8. CTECH DRAWER ASSEMBLY IN COMPARTMENT D3
9. ONE VERTICAL PARTITION IN COMPARTMENT D3
10. ALUMINUM TOOLBOARD W/TRACK ON REAR WALL OF COMPARTMENT D3, P2 & P3

REV	DATE	BY	CH
7	28JUL17	AMI	COR
6	14JUL17	AMI	COR
5	24MAY17	AMI	KWI
4	19MAY17	AMI	SMA

CHASSIS DATA
MAKE: PIERCE
MODEL: IMPEL FR

Pierce MANUFACTURING INC.

TITLE: 1500-D-500 GAL POLY W/30 GAL FOAM CELL, 161" FDLER (3)XLAYS, DELUGE, BOOSTER REEL, LADDERS BESIDE TANK
FOR: CITY OF NORTH RICHLAND HILLS
NORTH RICHLAND HILLS, TEXAS
DWG NO.: 31176AD

JOB NO.	31176
SCALE	1:24
DATE	
DRAWN BY	AMI 15MAY17
CHECKED BY	SMA 16MAY17
SHEET SIZE	D
SHEET NO.	1 OF 1

View File Created 07-AUG-2017 07:18:55