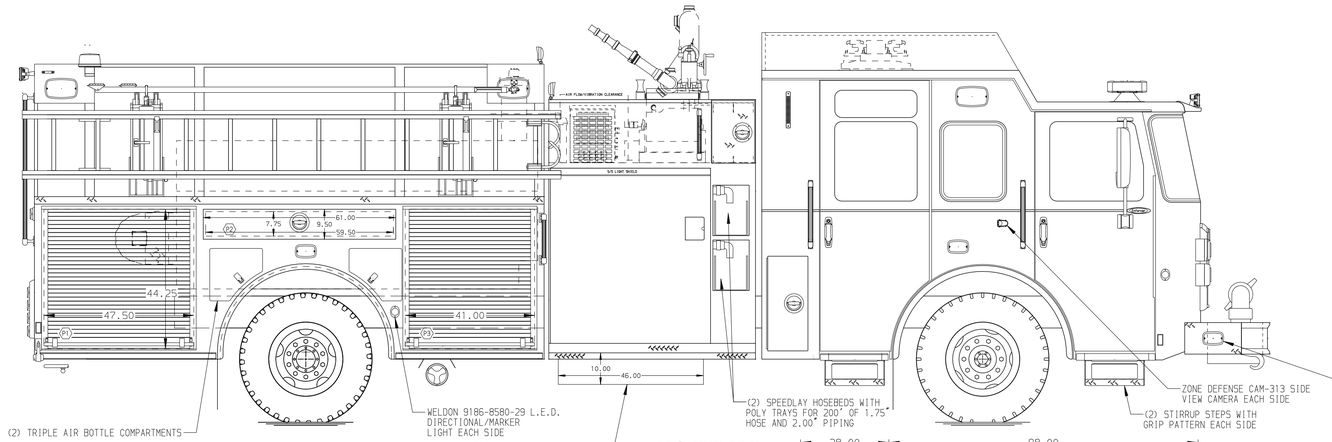

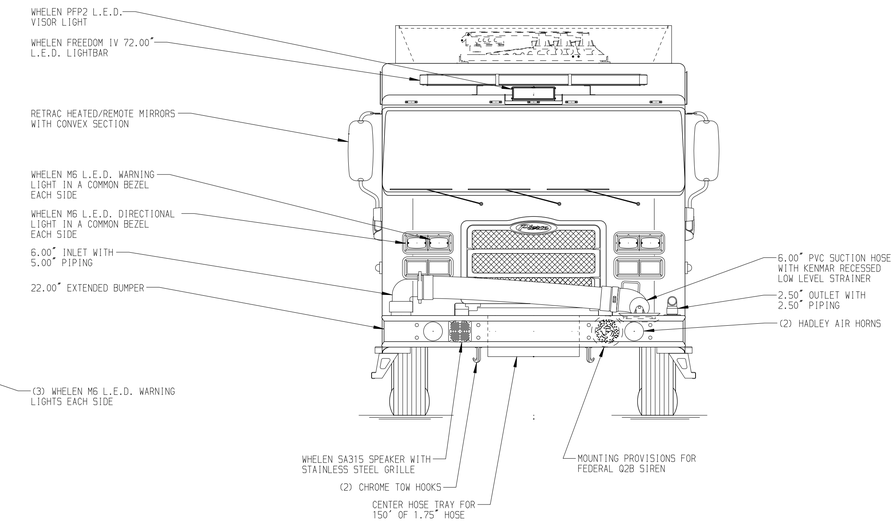

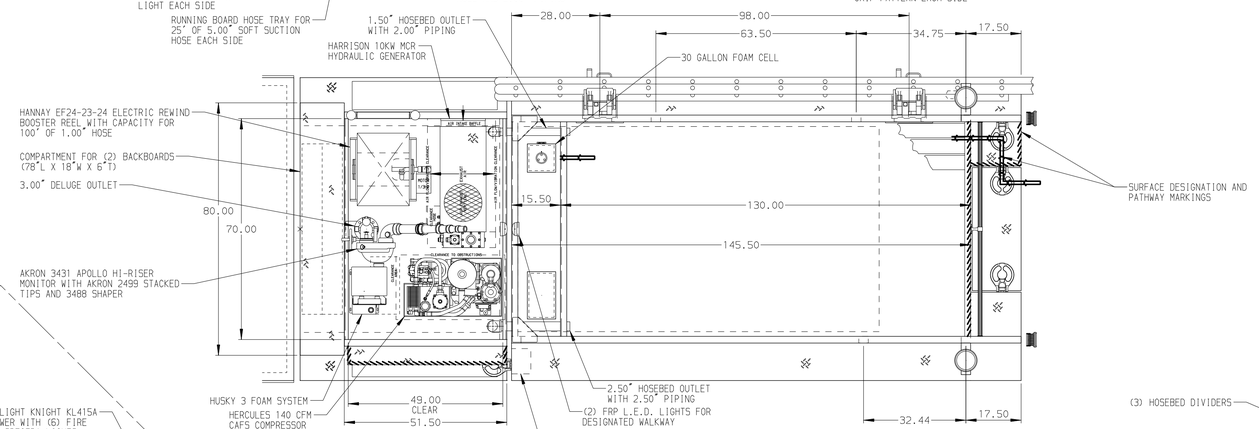

HOSEBED CAPACITIES

1. 200' OF 2.50" D.J. HOSE
2. 1500' OF 5.00" D.J. HOSE
3. 500' OF 3.00" D.J. HOSE
4. 250' OF 1.75" D.J. HOSE

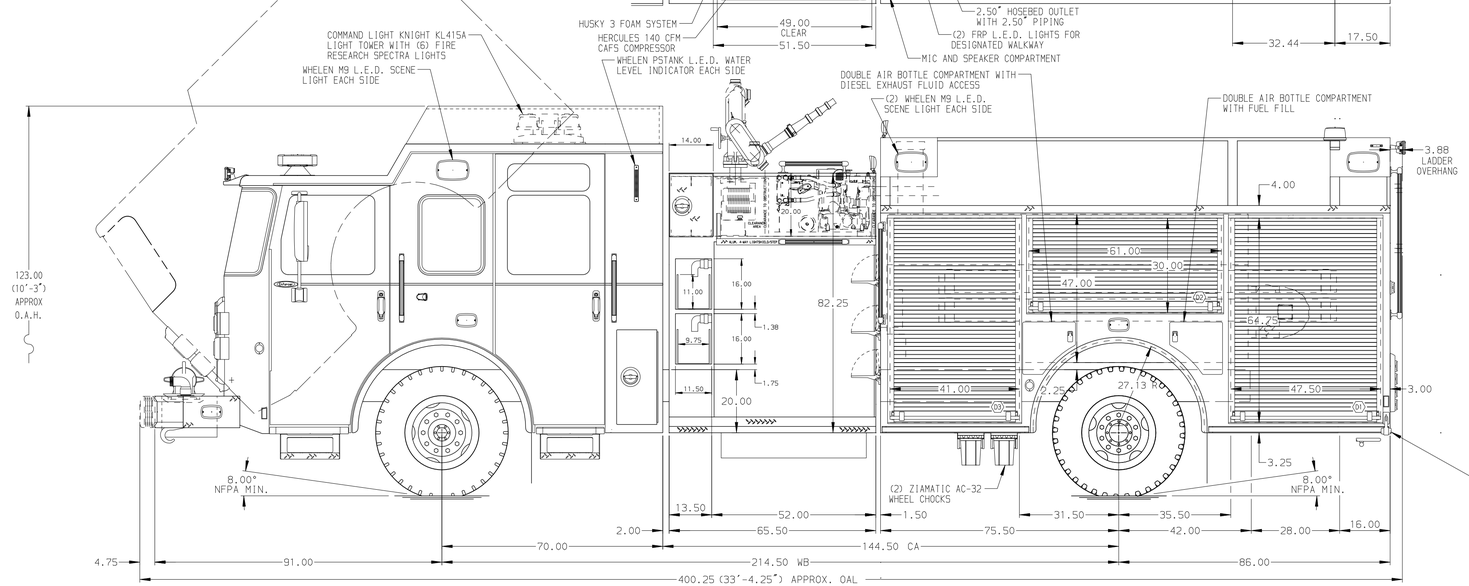

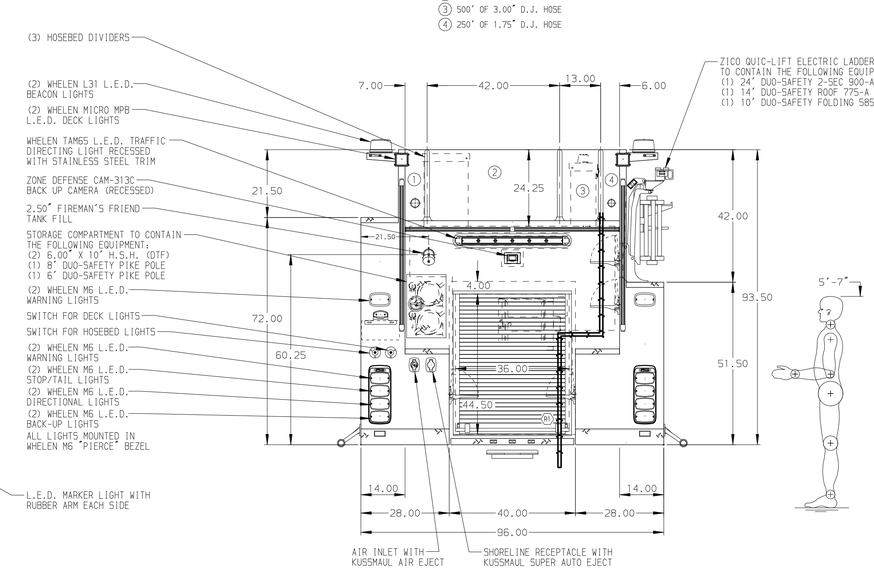

ALUMINUM BODY

NOTE

DIMENSIONS SHOWN ARE APPROXIMATE AND ARE SUBJECT TO MINOR DEVIATIONS AS MAY OCCUR OR BE NECESSARY IN CONSTRUCTION.
MINOR DETAILS NOT SHOWN.

1. ONE AKRON ERWC-15-10 3-WIRE ELECTRIC REWIND CORD REEL WITH 175' OF 10/3 CABLE IN COMPARTMENT-R1
2. ONE DUPLEX RECEPTACLE IN COMPARTMENT-D3
3. BATTERY CHARGER LOCATED BEHIND DRIVER SEAT
4. BATTERY CHARGER INDICATOR LOCATED ON DRIVER SIDE SEAT RISER
5. ONE FULL WIDTH/DEPTH ADJUSTABLE SHELF WITH SIDES IN COMPARTMENT-D1,D3,P1,P3,R1
6. ONE SLIDE-OUT TOOLBOARD WITH PEGBOARD PATTERN IN COMPARTMENT-D3
7. ONE FLOOR MOUNTED SLIDE-OUT TRAY WITH SIDES IN COMPARTMENT-P1,P3,R1
8. ONE SWING-OUT TOOLBOARD WITH PEGBOARD PATTERN IN COMPARTMENT-D2
9. CIRCUIT BREAKER PANEL LOCATED IN COMPARTMENT-D3

REV	DATE	BY	CH
B	10JUL17	BST	MSA
A	08JUN17	BST	MSA

CHASSIS DATA
MAKE: PIERCE
MODEL: ENFORCER

Pierce MANUFACTURING INC.

TITLE: 1500-D-1000P W/30 GAL. FOAM CELL,DELUGE,GENERATOR 161" PUMPER BODY,ZICO LADDER RACK,CAFS,HUSKY 3
FOR: FLORENCE TOWNSHIP FIRE DEPARTMENT WAKEMAN, OH
DWG NO.: 31194AD

JOB NO.	31194
SCALE	1:24
DATE	
DRAWN BY	BST 21APR17
CHECKED BY	CDU 24APR17
SHEET SIZE	D
SHEET NO.	1 OF 1

View File Created 13-JUL-2017 09:54:47