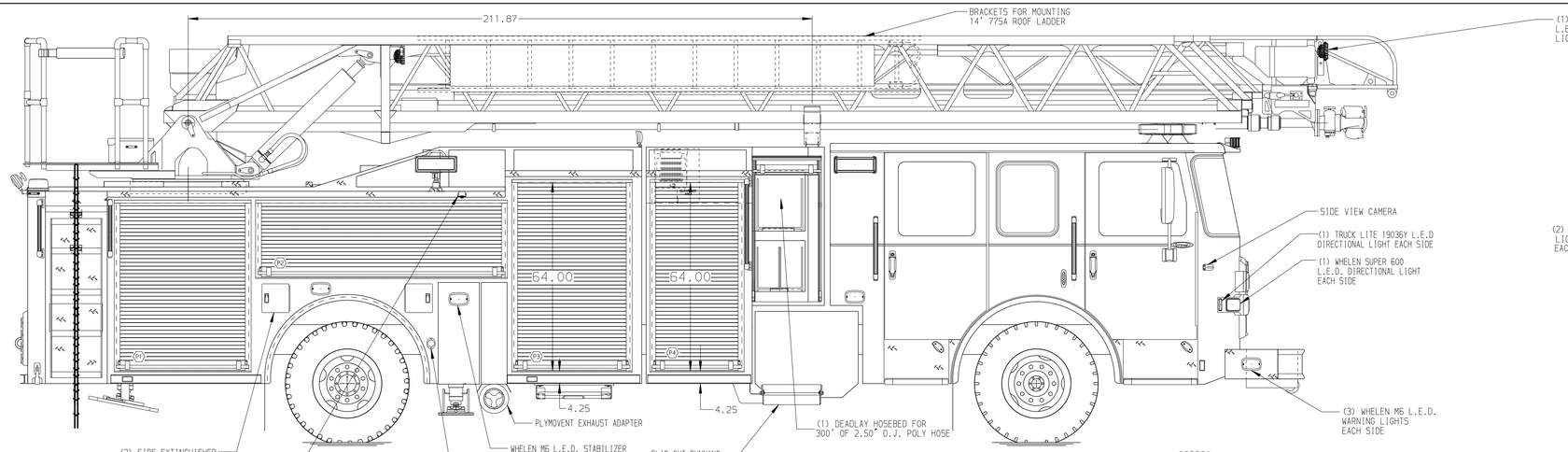

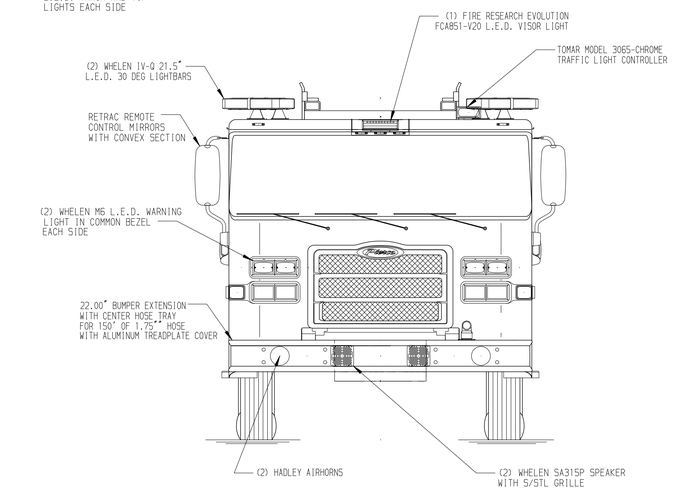

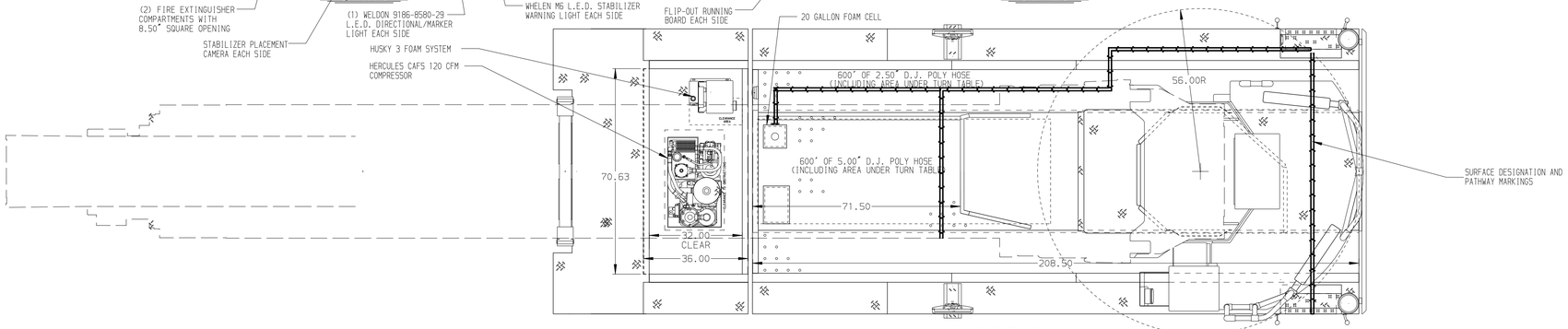

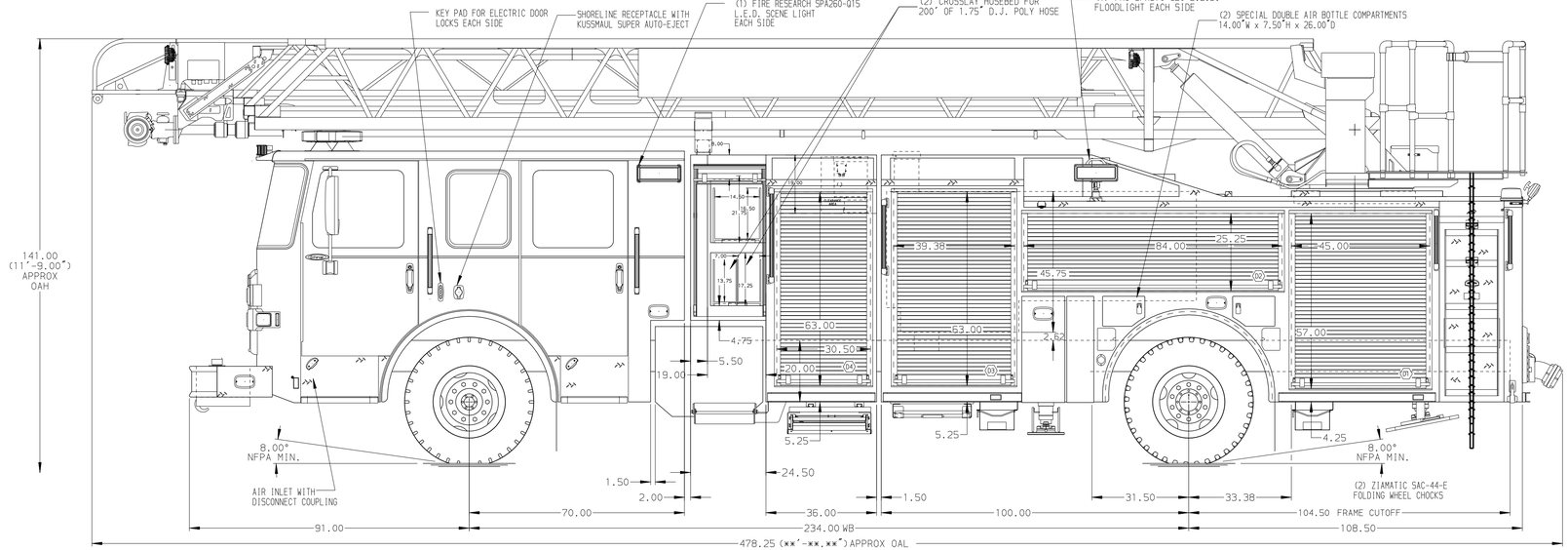

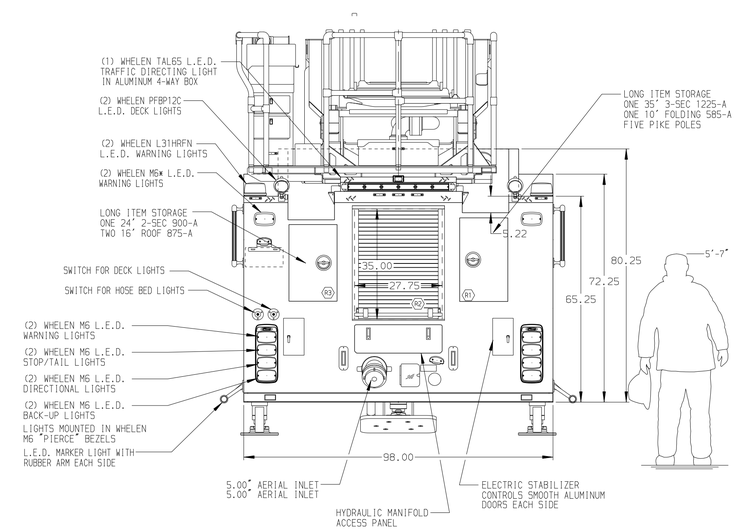

ALUMINUM BODY

SIDE ROLL & FRONTAL IMPACT PROTECTION

NOTE

DIMENSIONS SHOWN ARE APPROXIMATE AND ARE SUBJECT TO MINOR DEVIATIONS AS MAY OCCUR OR BE NECESSARY IN CONSTRUCTION.
MINOR DETAILS NOT SHOWN.

1. ONE 1.50 OUTLET WITH 2.00 PIPING AND SWIVEL LOCATED ON LEFT BUMPER DECK
2. SHORELINE RECEPTACLE WITH KUSSMAUL SUPER AUTO-EJECT LOCATED ON DRIVER SIDE OF THE CAB
3. AIR INLET WITH DISCONNECT COUPLING IN THE DRIVER SIDE STEPWELL
4. BATTERY CHARGER LOCATED IN COMPARTMENT D3
5. BATTERY CHARGE INDICATOR LOCATED ON THE DRIVER SIDE SEAT RISER
6. ADJUSTABLE SHELVES IN COMPARTMENTS D1, D3 P1 & P3 SEE SHOP ORDER
7. TWO FLOOR MOUNTED SLIDE-OUT TRAY LOCATED IN COMPARTMENTS P1 & P3
8. 1500 GPM HIGH FLOW WATERWAY
9. NON-RAISED AERIAL PEDESTAL
10. LIFTING EYE ROPE RESCUE ATTACHMENT AT AERIAL TIP
11. 2-WAY INTERCOM SYSTEM BETWEEN AERIAL TIP AND TURNTABLE
12. ONE SWING-OUT ALUMINUM TOOL BOARD IN COMPARTMENT P2
13. ALUMINUM PEGBOARD WITH TRACKS ON THE REAR WALL OF COMPARTMENT D2, D3 & P2
14. TRIDENT FOLDING STEPS ON AERIAL DEVICE

REV	DATE	BY	CH
7	200CT17	SVA	-
8	21SEP17	SVA	LPA
9	04AUG17	SVA	LPA

CHASSIS DATA
MAKE: PIERCE
MODEL: ENFORCER

Pierce MANUFACTURING INC.

TITLE: 107' ASCENDANT HSL AERIAL LADDER AND BODY ASSEMBLY
520 GALLON TANK - 500 WATER/20 FOAM

FOR: EL PASO FIRE DEPARTMENT
EL PASO, TEXAS

DWG NO. 31267AD

JOB NO.	SCALE	DRAWN BY	CHECKED BY	SHEET SIZE	SHEET NO.
31267	1:24	SVA	JBL	D	1 OF 1

DATE: 25JUL17 / 25JUL17

View File Created 23-OCT-2017 12:48:05