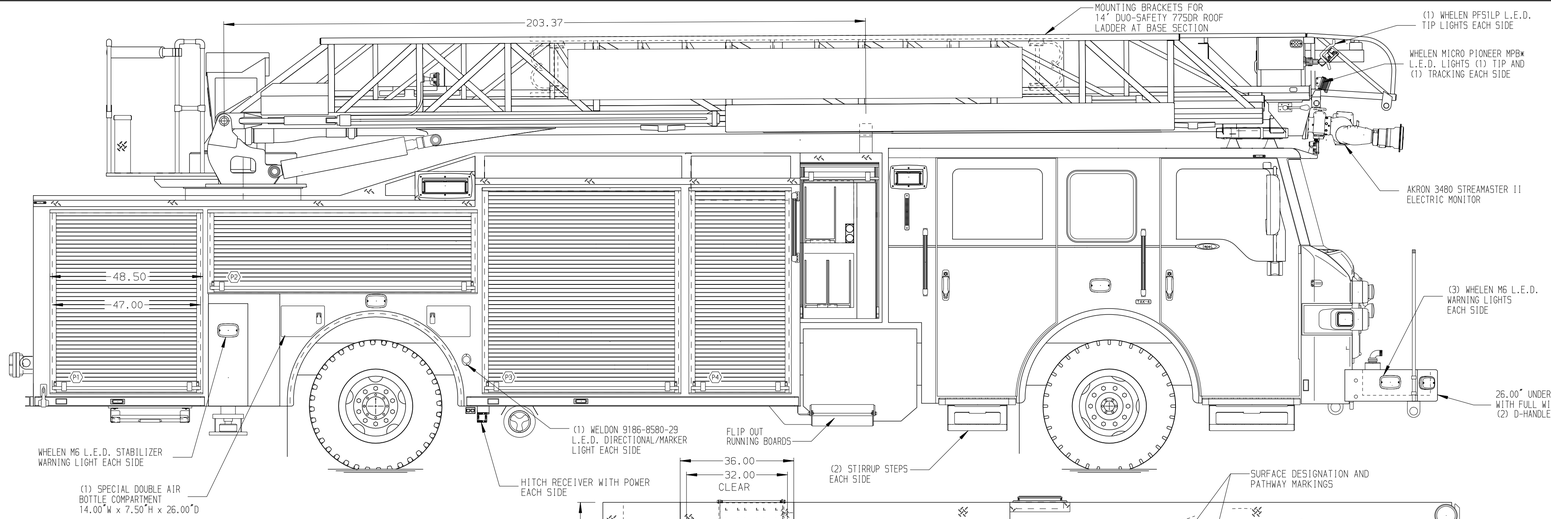

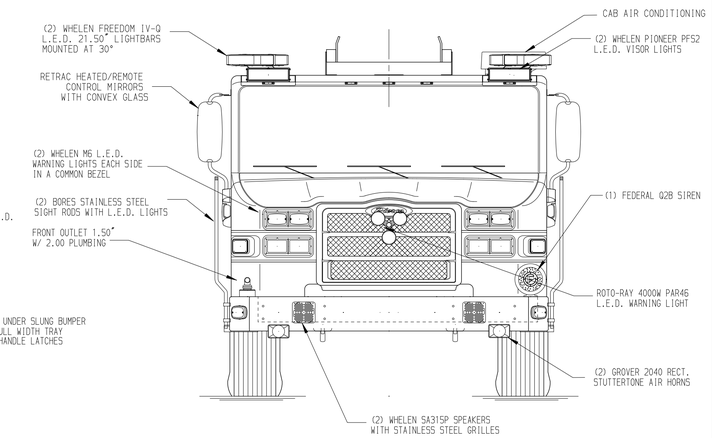

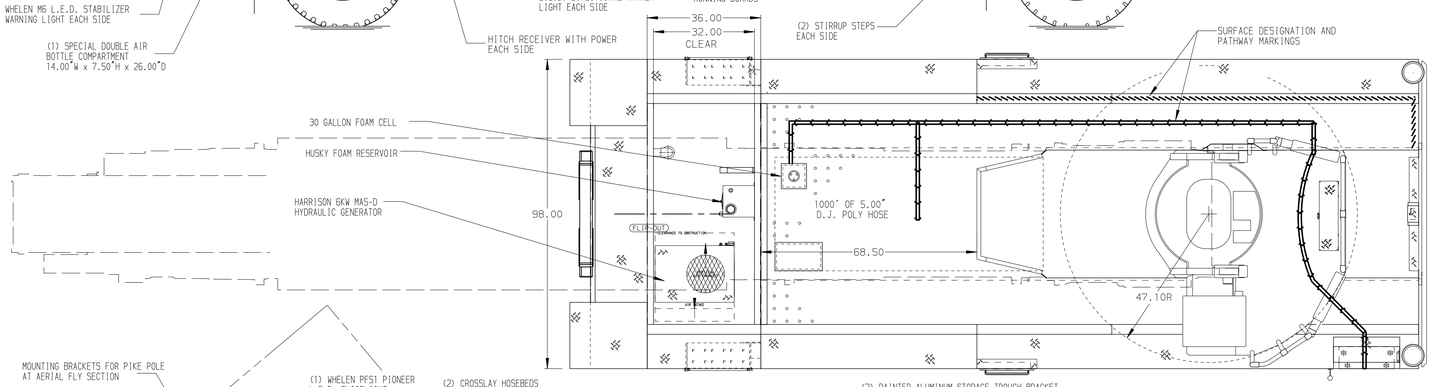

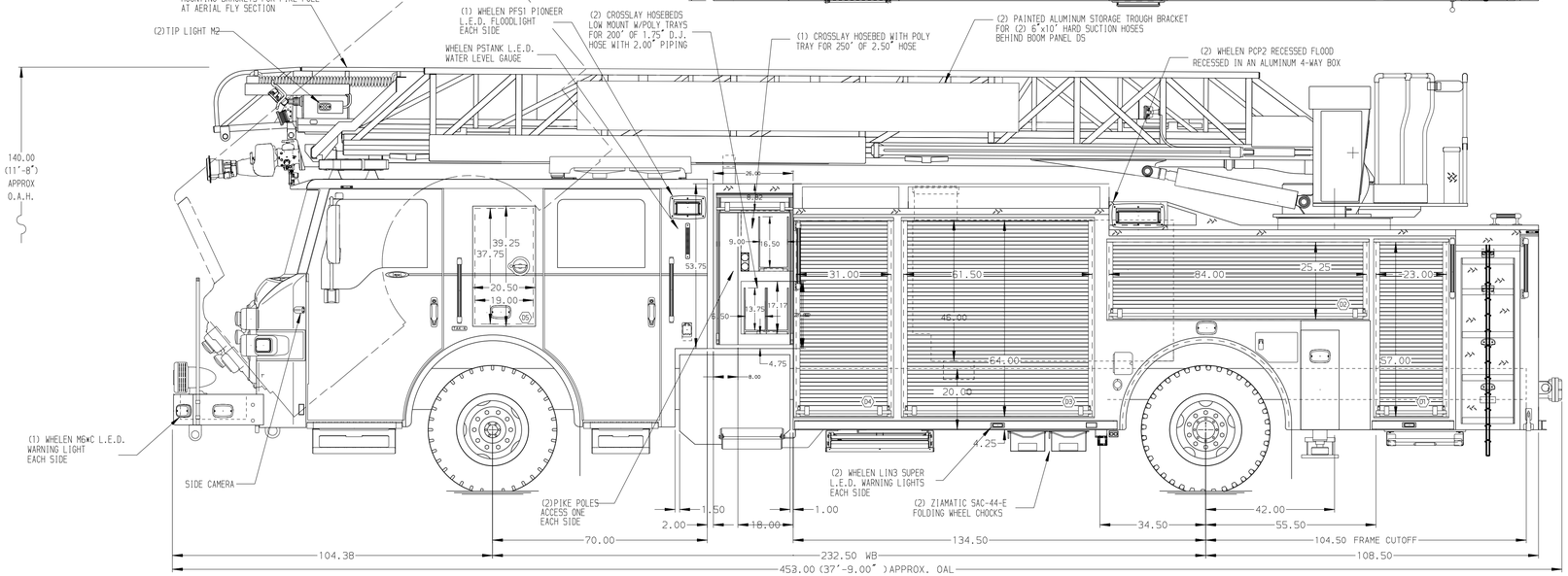

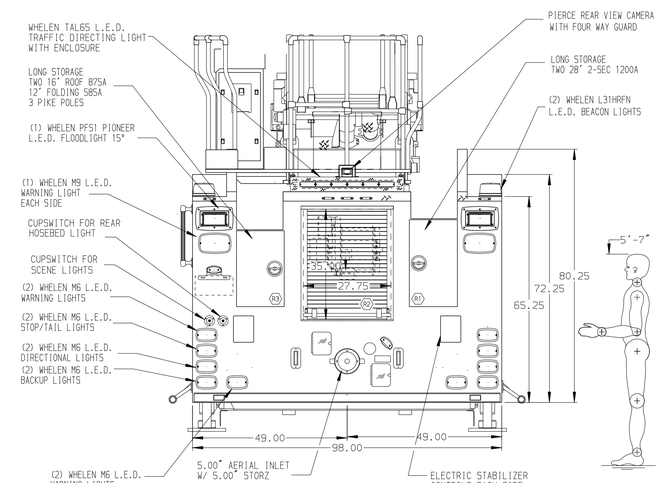

ALUMINUM BODY

SIDE ROLL AND FRONTAL IMPACT PROTECTION

NOTE

DIMENSIONS SHOWN ARE APPROXIMATE AND ARE SUBJECT TO MINOR DEVIATIONS AS MAY OCCUR OR BE NECESSARY IN CONSTRUCTION.
MINOR DETAILS NOT SHOWN.

1. BATTERY CHARGER LOCATED UPPER REAR COMPARTMENT D3
2. BATTERY CHARGE INDICATOR MOUNTED ON DRIVER STEP WELL
3. AUXILIARY POWER SUPPLY LOCATED IN COMPARTMENT D3 UPPER AREA
4. DUAL L.E.D. LIGHT STRIPS LOCATED IN HOSE BED
5. 1500 GPM HIGH FLOW WATERWAY
6. ONE ADJUSTABLE SLIDE-OUT TRAY WITH 2" SIDES IN COMPARTMENTS P3 & P4
7. 120V SHORELINE RECEPTACLE LOCATED LOW ON DRIVERS SIDE BEHIND CREW CAB DOOR
8. S/STL SCUFFPLATE ON ALL SIDES OF CROSSLAY OPENINGS
9. CIRCUIT BREAKER PANEL IN COMPARTMENT D3 FORWARD WALL
10. ONE HANNAY ELECTRIC REWIND CORD REEL MODEL 1618-17-18 WITH 200' OF 10/4 CABLE IN COMPARTMENT R2, REAR WALL MOUNTED
11. L.E.D. LIGHTING ON AERIAL LADDER SECTIONS
12. 2-WAY INTERCOM SYSTEM BETWEEN AERIAL TIP AND TURNTABLE
13. AERIAL PEDESTAL RAISED 1.50"
14. LIFTING EYE RESCUE ATTACHMENT AT AERIAL TIP
15. ONE ADJUSTABLE FULL WIDTH/FULL DEPTH SHELF IN COMPARTMENTS D1 & D2 TWO SHELVES IN P1, P3 & P4

REV	DATE	BY	CH
3	030CT17	SVA	MSA
2	22AUG17	SVA	MSA
1	30JUN17	SVA	GRM

CHASSIS DATA
MAKE: PIERCE
MODEL: IMPEL

Pierce MANUFACTURING INC.

TITLE: 75 AERIAL LADDER & BODY ASSEMBLY
500 GALLON TANK-470 GAL. WATER/30 GAL. FOAM

FOR: VIOLET TOWNSHIP FIRE DEPARTMENT
PICKERINGTON, OH

DWG NO. 31275AD

JOB NO.	31275
SCALE	1:24
DATE	
DRAWN BY	SVA 26JUN17
CHECKED BY	CRI 27JUN17
SHEET SIZE	D
SHEET NO.	1 OF 1

View File Created 10-OCT-2017 09:21:27