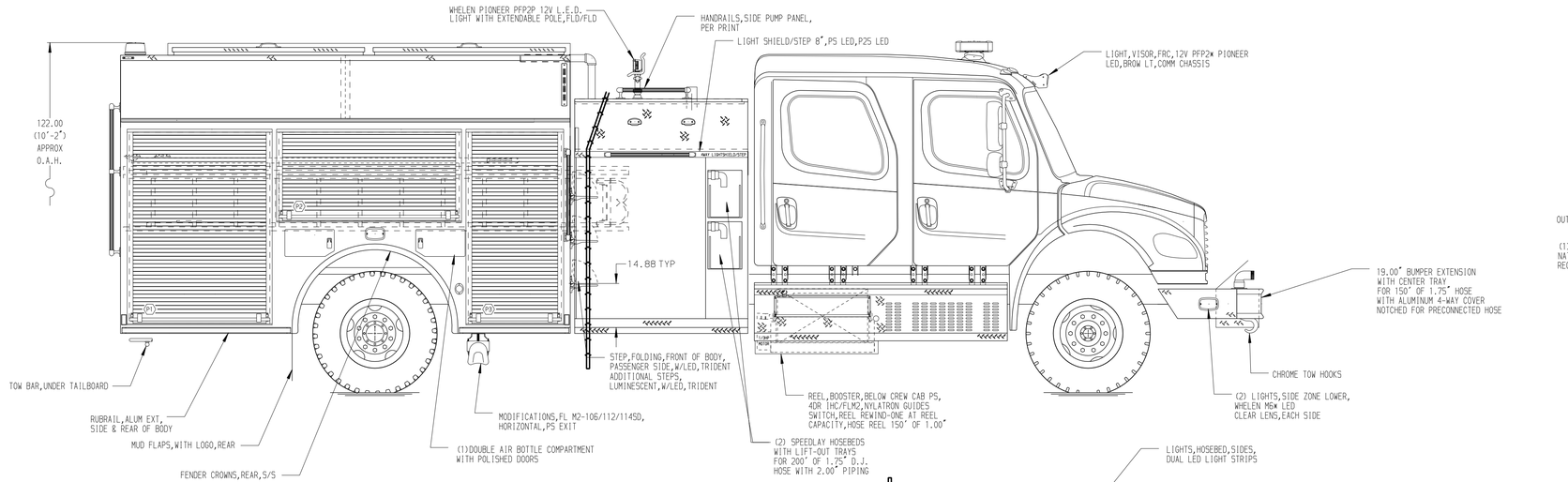

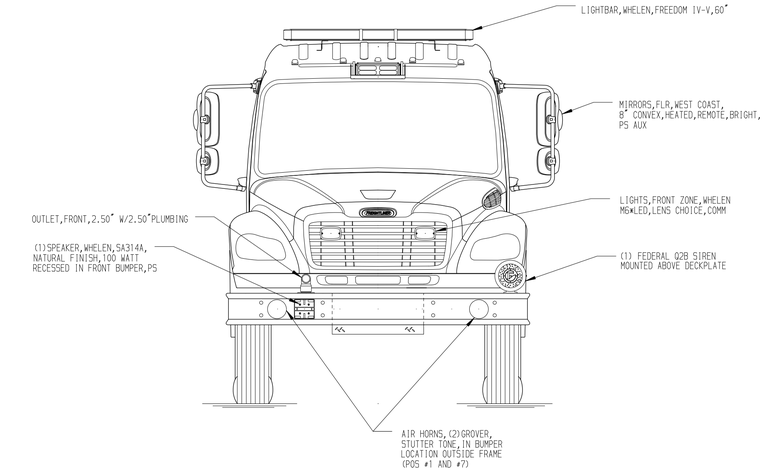

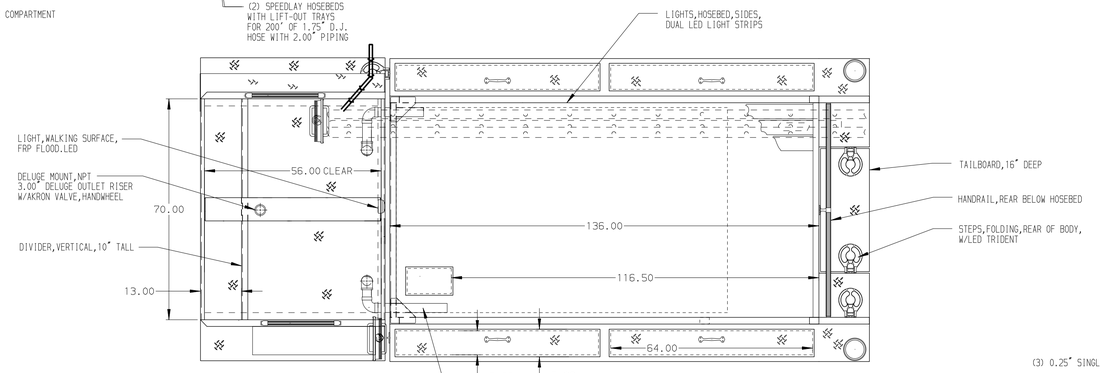

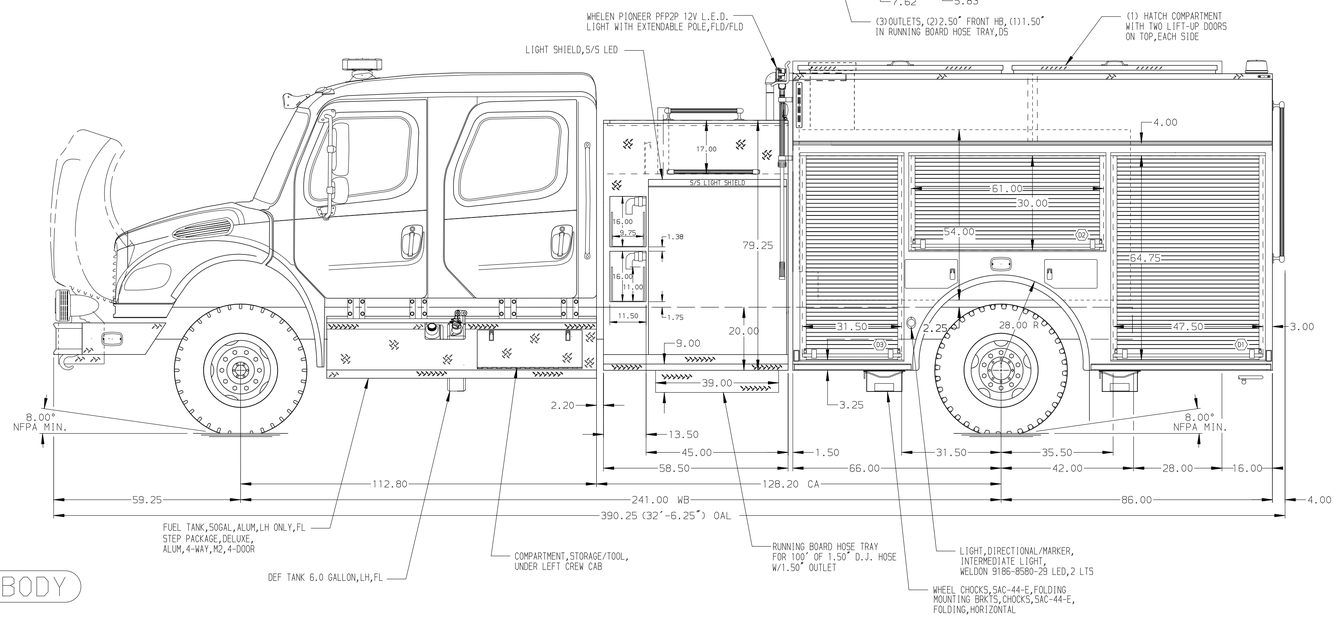

HOSEBED CAPACITIES

1. 250' OF 1.75" D.J.POLY HOSE
2. 1200' OF 3.00" D.J.POLY HOSE
3. 500' OF 5.00" D.J.POLY HOSE
4. 200' OF 2.00" D.J.POLY HOSE

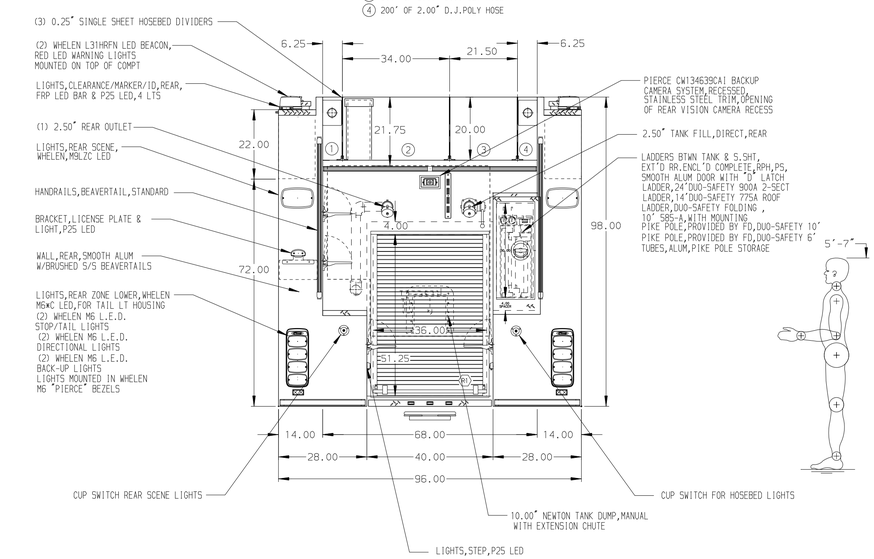

ALUMINUM BODY

NOTE

DIMENSIONS SHOWN ARE APPROXIMATE AND ARE SUBJECT TO MINOR DEVIATIONS AS MAY OCCUR OR BE NECESSARY IN CONSTRUCTION.
MINOR DETAILS NOT SHOWN.

REV	DATE	BY	CH
6	06DEC17	JLA	RWI
5	13JUL17	JAF	GSC
4	02MAY17	RWI	JAF

CHASSIS DATA	
MAKE	FL
MODEL	M2-106

Pierce MANUFACTURING INC.

TITLE	1500-D-1000 POLY,152"PUMPER BODY,DS&PS FULL HGT 45"SIDE CONTROL,(2)CROSSLAYS
FOR	ANTIOCH FIRE DEPARTMENT FORSTON,GEORGIA
DWG NO.	31278AD

JOB NO.	31278
SCALE	1:24
DATE	
DRAWN BY	JAF 10APR17
CHECKED BY	RWI 12APR17
SHEET SIZE	D
SHEET NO.	1 OF 1

View File Created 07-DEC-2017 12:06:12