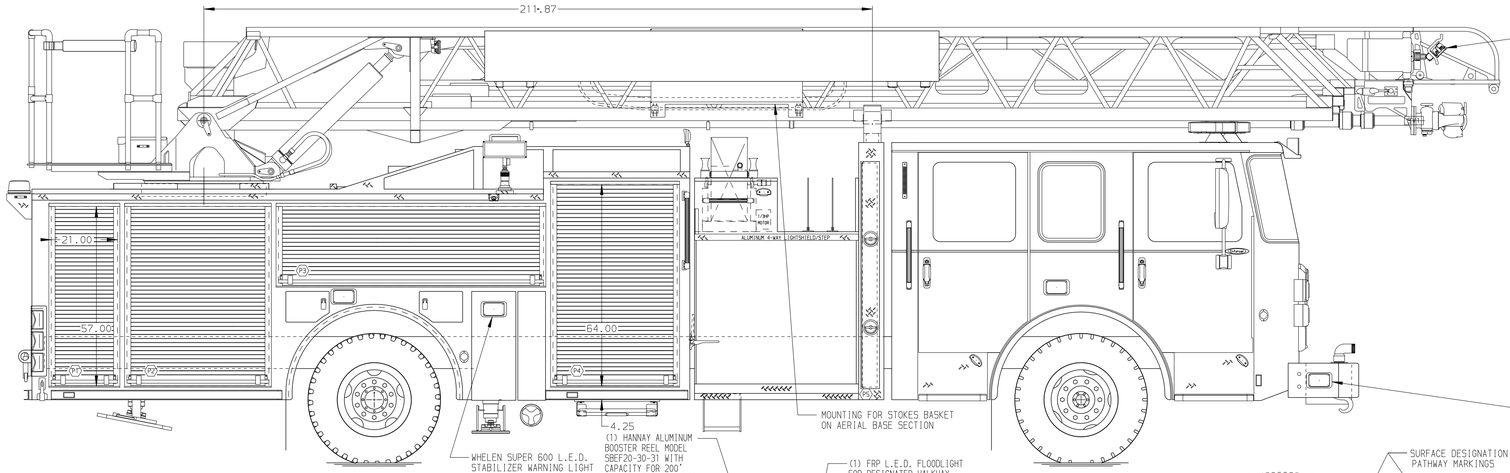

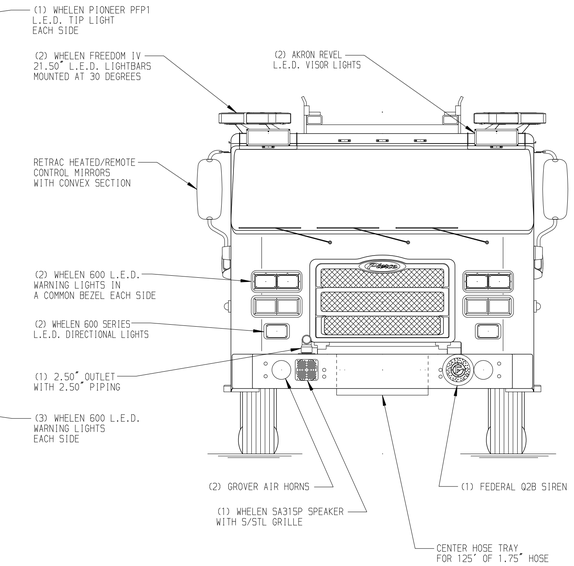

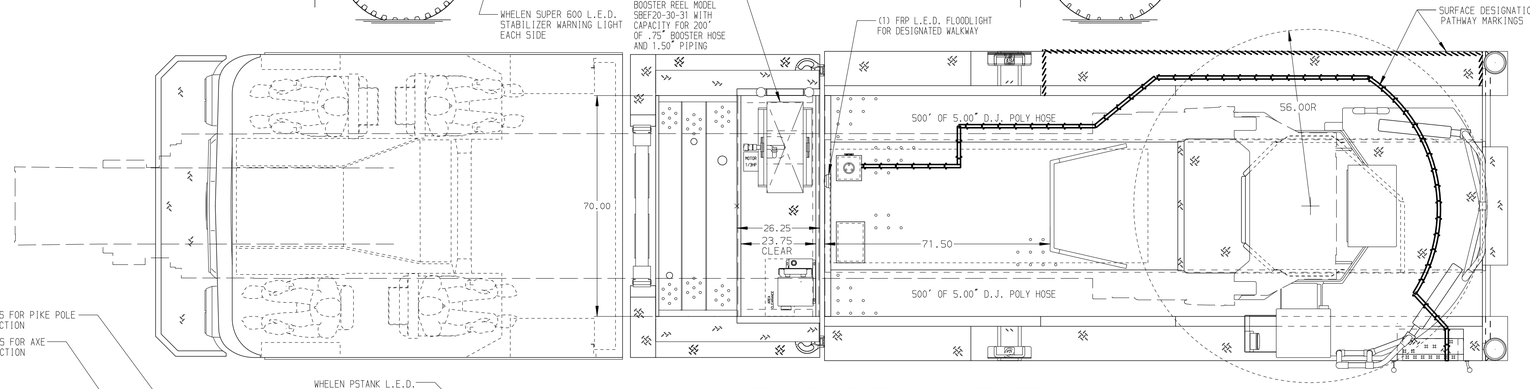

BODY	WATER TANK
107' Heavy Duty Alum Body	470 Gallon PAL Poly Water Tank
COMPT,DRIVER SIDE FRONT	Foam System
Full Height Roll-up Forward	Husky 3 Single Agent Foam System
COMPT,DRIVER SIDE REAR	Foam Cell
Full Height Roll-up Rearward	30 Gallon Foam Cell, Reduced Water
COMPT,PASSENGER SIDE FRONT	
Full Height Roll-up Forward	
COMPT,PASSENGER SIDE REAR	
Full Height Roll-up Rearward	

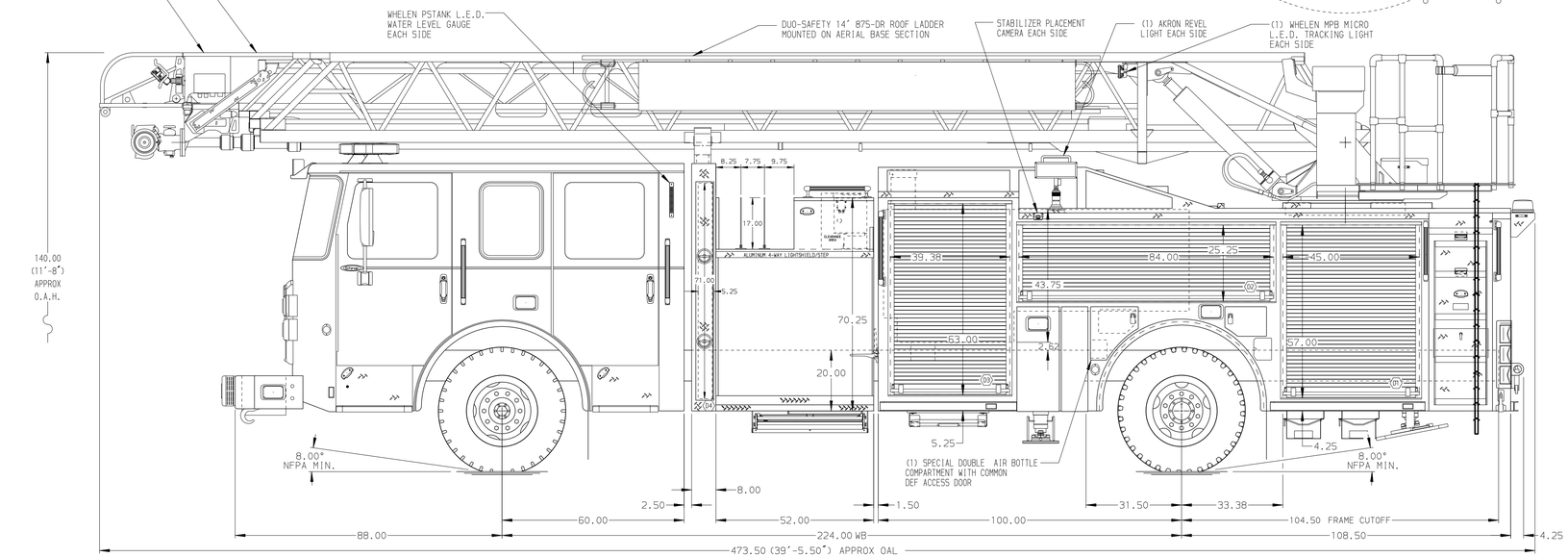

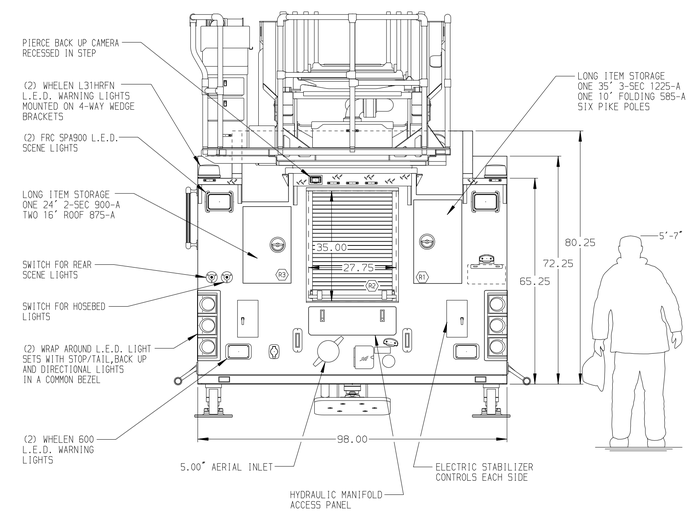

CHASSIS	CAB	AXLE,FRONT,CUSTOM	TRANSMISSION	PUMPHOUSE	CROSSLAYS,1.50"	SPEEDLAYS
Enforcer Chassis	6000 Enforcer Cab	22,800 lb Dana Axle	Allison 5th Gen, 3000 EVS P	52" Control Zone Side Mount	(2) 1.50" Standard Capacity	Speedlays Not Required
ENGINE	BUMPER	AXLE,REAR		PUMP	CROSSLAYS,2.50"	GENERATOR
450 HP Cummins L9 Engine	19" Extended Steel Painted	33,500 lb Meritor Axle		2000 GPM Waterous CSU	(1) 2.50" Standard Capacity	Generator Not Required

NOTE

DIMENSIONS SHOWN ARE APPROXIMATE AND ARE SUBJECT TO MINOR DEVIATIONS AS MAY OCCUR OR BE NECESSARY IN CONSTRUCTION.
MINOR DETAILS NOT SHOWN.

1. SHORELINE RECEPTACLE WITH KUSSMAUL SUPER AUTO-EJECT LOCATED ON DRIVER SIDE REAR BULKHEAD
2. AIR INLET WITH DISCONNECT COUPLING IN THE DRIVER SIDE STEPWELL
3. BATTERY CHARGER LOCATED BEHIND THE DRIVER'S SEAT
4. BATTERY CHARGE INDICATOR LOCATED ON THE DRIVER'S SEAT RISER
5. TEN ADJUSTABLE SHELVES IN COMPARTMENTS PER SHOP ORDER
6. TWO FLOOR MOUNTED SLIDE-OUT TRAYS IN COMPARTMENTS PER SHOP ORDER
7. ONE SWING-OUT ALUMINUM TOOL BOARD IN COMPARTMENT PER SHOP ORDER
8. NON-RAISED AERIAL PEDESTAL
9. 1500 GPM HIGH FLOW WATERWAY

REV	DATE	BY	CH
3	23AUG17	TKA	SHE
2	21JUL17	TKA	SHA

CHASSIS DATA
MAKE: PIERCE
MODEL: ENFORCER

Pierce MANUFACTURING INC.

TITLE: 107' ASCENDANT AERIAL LADDER AND BODY ASSEMBLY
FOR: NORTH SHELBY FIRE DISTRICT BIRMINGHAM, ALABAMA
DWG NO.: 31286AD

JOB NO.	SCALE	DRAWN BY	CHECKED BY	SHEET SIZE	SHEET NO.
31286	1:24	TKA	CRI	D	1 OF 1
	DATE	12APR17	14APR17		

View File Created 24-AUG-2017 07:46:25