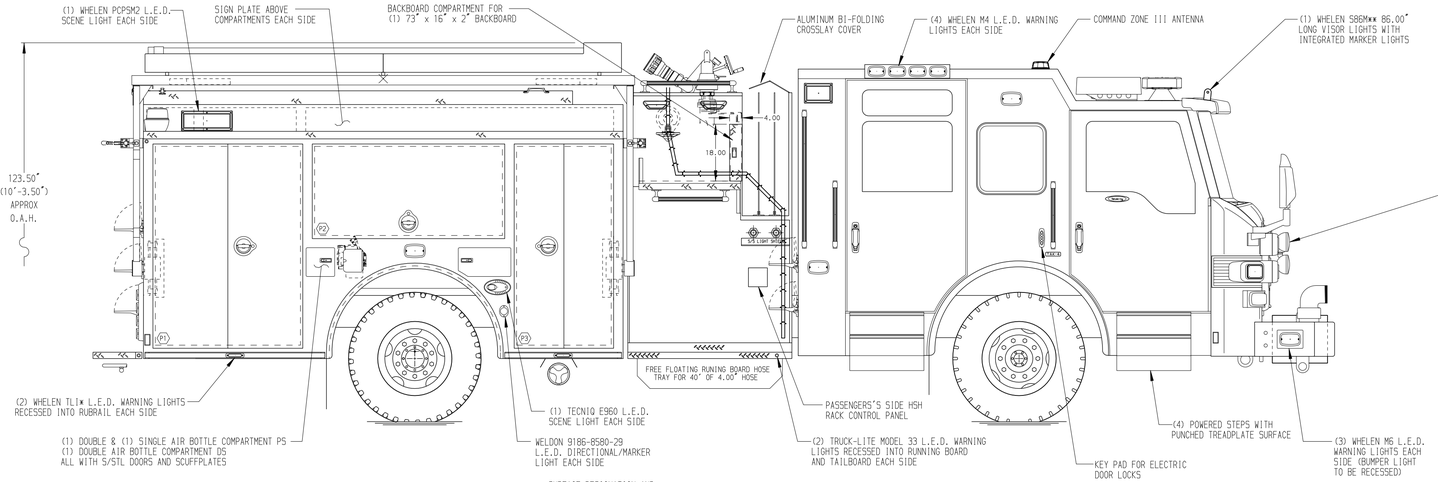

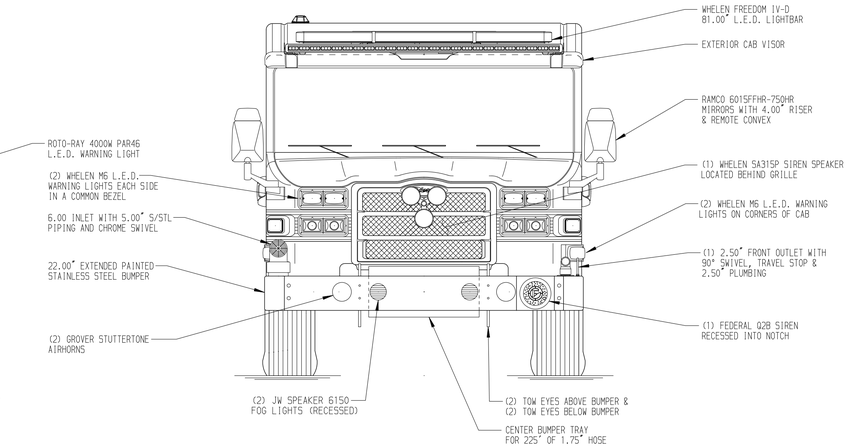

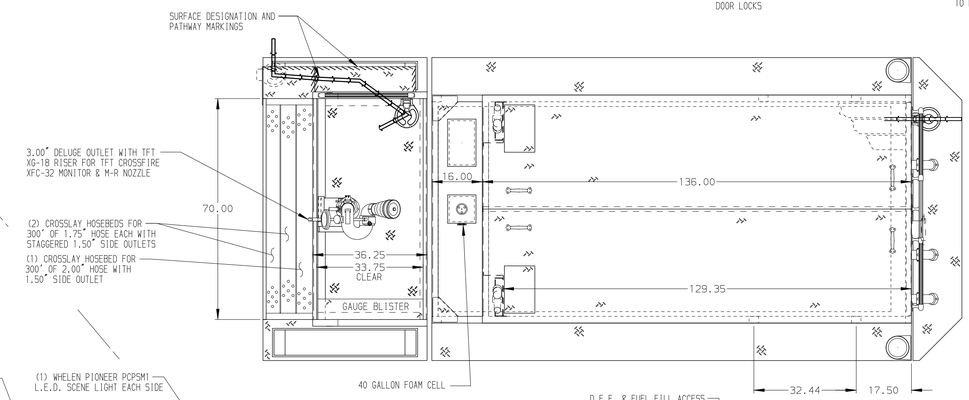

HOSEBED CAPACITIES

1. - 400' OF 2.00" D.J. HOSE
2. - 300' OF 3.00" D.J. HOSE
3. -1200' OF 4.00" D.J. HOSE
4. - 300' OF 2.50" D.J. HOSE
5. - 300' OF 5.00" D.J. HOSE

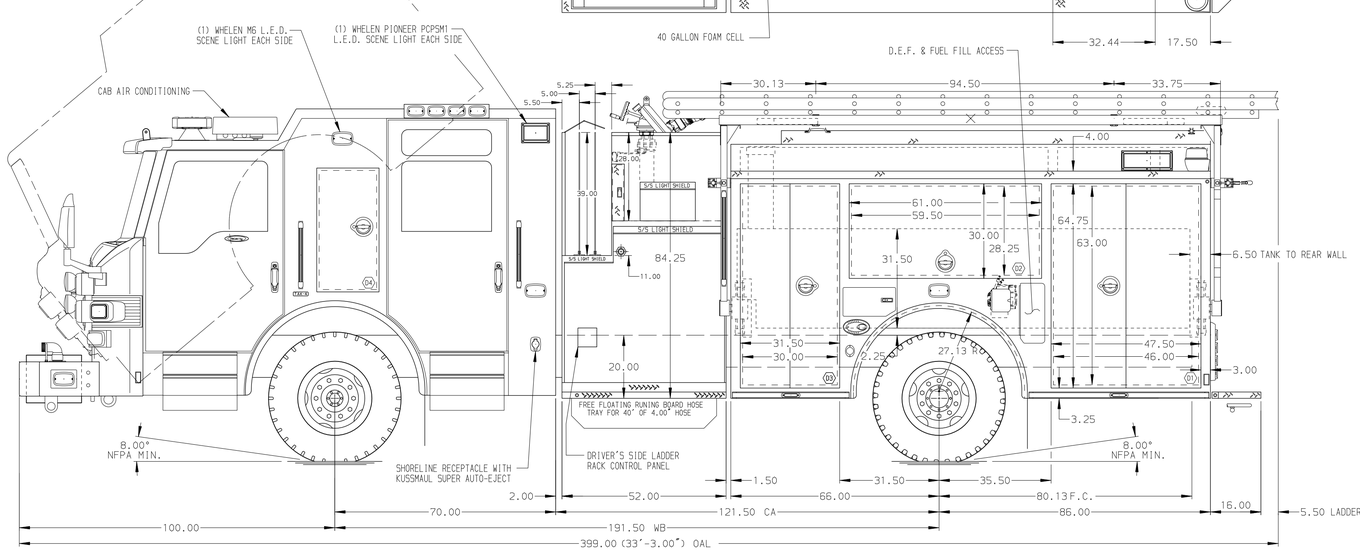

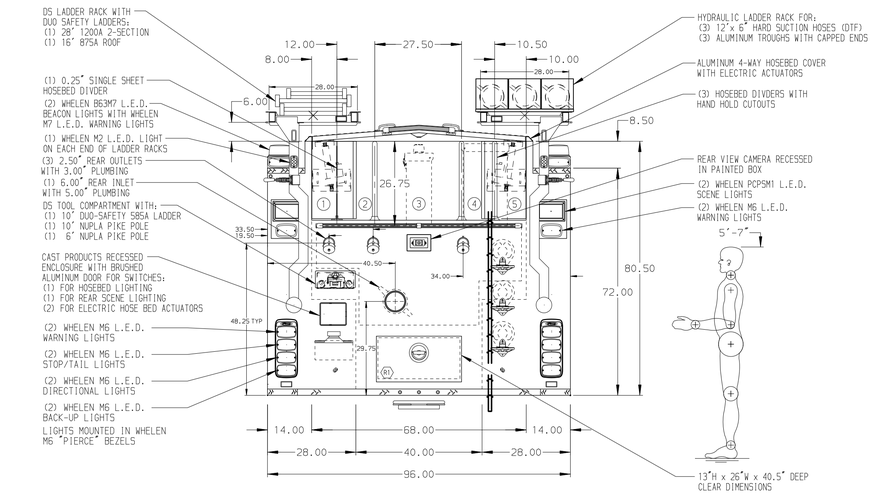

ALUMINUM BODY

MAXIMUM O.A.H. 124.00"

SIDE ROLL AND FRONTAL IMPACT PROTECTION

NOTE

DIMENSIONS SHOWN ARE APPROXIMATE AND ARE SUBJECT TO MINOR DEVIATIONS AS MAY OCCUR OR BE NECESSARY IN CONSTRUCTION.
MINOR DETAILS NOT SHOWN.

1. RUD AUTOMATIC TIRE CHAINS TO BE PROVIDED AT REAR
2. BATTERY CHARGER / AIR COMPRESSOR TO BE LOCATED IN COMPARTMENT D3
3. BATTERY CHARGE INDICATOR LOCATED ON DRIVER'S SEAT RISER
4. REVERSED HINGE DOOR ON COMPARTMENTS D3 & P3
5. THREE 500# FULL WIDTH/DEPTH SHELVES IN COMPARTMENT P1, ONE IN D1, D3, & P2
6. ONE 250# SLIDE-OUT TRAY IN COMPARTMENT D3
7. FIVE 26"H VERTICAL PARTITIONS FOR HOSE STORAGE TO BE INSTALLED IN COMPARTMENT D3
8. PEGBOARD TO BE INSTALLED ON BACK WALL OF COMPARTMENTS D1, D2, D3, P1, P2, & P3
9. SCUFF PLATES TO BE INSTALLED AT REAR OF HYDRAULIC LADDER RACKS
10. ONE ACCESS PANEL WITH THREADED INSERTS TO BE INSTALLED IN COMPARTMENTS D2 & P2
11. AMDOR LUMABAR H20 L.E.D. LIGHTS TO BE PROVIDED IN CARGO AREAS

REV	DATE	BY	CH
7	16NOV17	GVH	RWA
6	02NOV17	GVH	RWA
5	27SEP17	GVH	TWH
4	04AUG17	GVH	WKL

CHASSIS DATA	
MAKE	PIERCE
MODEL	VELOCITY FR

Pierce MANUFACTURING INC.

TITLE	2000-D-750GAL WATER, 40GAL FOAM, 152" FH/FDLER BODY (3) CROSSLAYS, DELUGE, DS HYD LADDER & PS HSH RACKS
FOR	PURCELLVILLE VOLUNTEER FIRE COMPANY PURCELLVILLE, VIRGINIA
DWG NO.	31324AD

JOB NO.	31324
SCALE	1:24
DATE	
DRAWN BY	GVH
DATE	01AUG17
CHECKED BY	WKL
DATE	01AUG17
SHEET SIZE	D
SHEET NO.	1 OF 1

View File Created 17-NOV-2017 07:16:59